Snap-on Industrial Brands

WILLIAMS | BAHCO | CDI TORQUE PRODUCTS

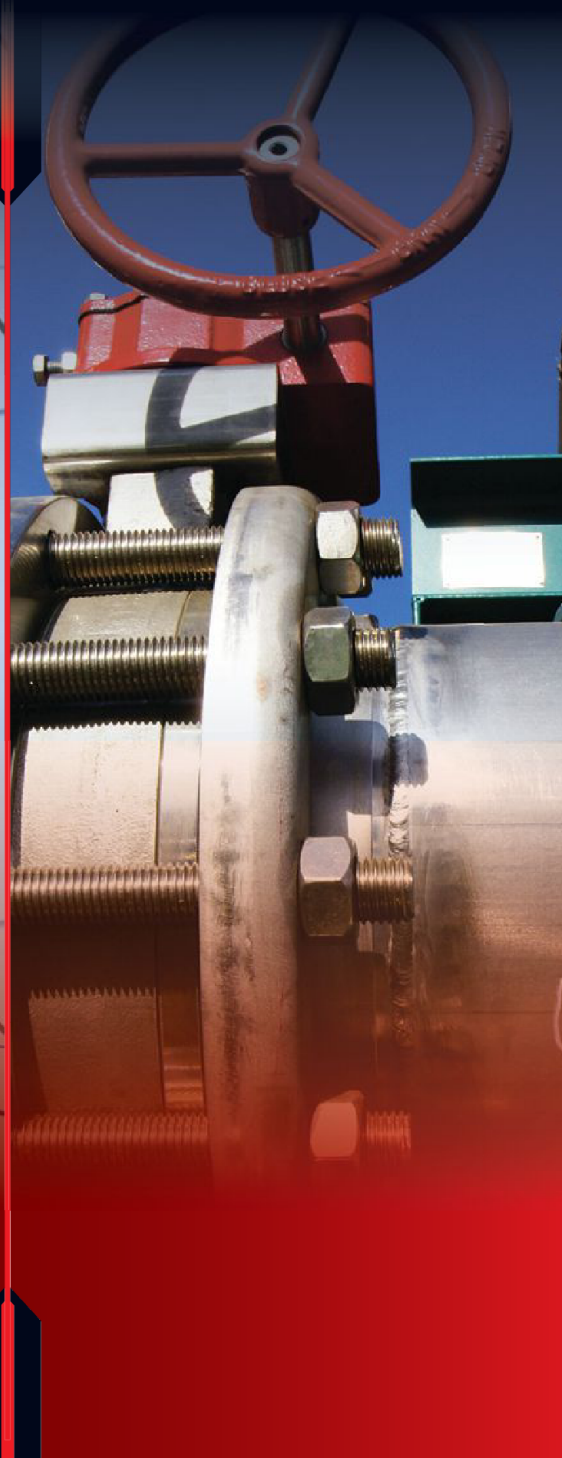

SNAP-ON INDUSTRIAL BRANDS: A TRADITION OF TRUST

Face it. When it comes to tools, it's all about which brands you trust. When your business depends on productivity, when you need to meet a deadline, when the work is tough and the specs are demanding - you have to be able to trust your tools to help you get the job done. And you have to trust the company that makes those tools.

The Snap-on Industrial Brands have earned your trust... each with a long tradition of quality workmanship, superior performance and constant innovation. The bottom line? Productivity.

Williams, Bahco, and CDI each claim a unique and powerful history. Snap-on Industrial supports these brands with its own unrivaled tradition of quality, workmanship, and product innovation. Every tool we make, every product we sell, every decision we make – all have the same priority: improve business productivity. Snap-on Industrial Brands are the tools you trust.

WILLIAMS®

Whatever your job, whatever your industry, whatever your challenge – Williams tools never flinch. Since 1882 Williams has met the harshest challenges of the most demanding industries. Williams was among the first manufacturers in the world to offer mass produced drop-forged tools, a 15° angle wrench, and heavy-duty slugging wrenches. A century and a quarter later we continue to offer unique and innovative products for those industries, whose demands are greater than ever.

Williams Tools: our heritage, your future.

BAHCO®

Bahco, inventor of the original adjustable wrench, is the world leader in adjustable wrenches, ergonomics, and cutting tools. We pioneered the bi-metal saw blade, an extraordinary achievement that melds two different metals into one saw blade that incorporates the best characteristics of each. We also know that each tool has to fit the hand, and have applied the science of Ergonomics to hand tool design in a unique 11-step scientific process called ergo®. Bahco offers quality tools, saws and accessories that are synonymous with safe, comfortable, and productive performance.

Bahco Tools: work smarter – faster – better.

CDI TORQUE PRODUCTS

No one manufactures and sells more professional-grade torque products. We are the world's largest supplier of industrial quality torque tools, and a respected leader in precision torque, force and tension calibration systems. CDI is ISO 9001 certified and a pioneer in the development of digital torque measuring instruments. So whether it's torque wrenches and drivers or torque testing and calibration equipment, all meet the most exacting standards.

CDI Torque Products:f torque without compfromise.

There are over 1000 new pgroducts in this cagtalog,

below are just a few examples. You will find many more in the pages to follow.

130 PIECE MAINTENANCE TOOL SET
Page 19

JOB SITE BOXES
Page 45

DIGITAL TORQUE TESTER™
Page 62

30° SERVICE WRENCHES, SAE
Page 114

3/8" DRIVE CROWFOOT WRENCH
Page 185

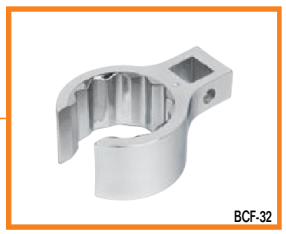

MAGNETIC RATCHETING SCREWDRIVERS
Page 288

SNAP RING PLIERS
Page 323

QUICK CLAMPS - SUPERIOR
Page 331

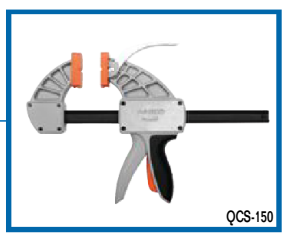

FIBERGLASS SLEDGE HAMMERS
Page 345

ALUMINUM CYLINDERS
Page 378

ROTARY BURRS
Page 461

1000V 10 PIECE TOOL SET
Page 480

WILLIAMS® | BAHCO® | CDI TORQUE PRODUCTS

MASTER SETS PAGES 7 - 26

TOOL STORAGE PAGES 27 - 50

TORQUE TOOLS PAGES 51 - 88

WRENCHES PAGES 89 - 136

SOCKETS & DRIVE TOOLS PAGES 137 - 276

SCREWDRIVERS PAGES 277 - 302

PLIERS PAGES 303 - 326

CLAMPS & PIPE TOOLS PAGES 327 - 338

HAMMERS, PUNCHES, CHISELS & PRYBARS PAGES 339 - 356

PULLERS & INDUSTRIAL HYDRAULICS PAGES 357 - 406

TOOLS FOR THE TRADES PAGES 407 - 476

INSULATED TOOLS PAGES 477 - 500

APPENDIX PAGES 501 - 528

SAFETY PAGES 529 - 532

INDEX PAGES 533 - 558

SIOUX™ TOOLS – For the Way... You Work

PRECISION TOOLS FOR PRECISE PERFORMANCE

Sioux Tools – a powerful member of the Snap-on Industrial Brands family - is known around the world for quality, durability and performance. Our extensive line of pneumatic power tools is engineered to make your job easier, safer and more efficient. We build tools that stand up to the demanding specifications required by today's industrial manufacturing, assembly and finishing needs. Our tools are second to none in power, workmanship and quality.

Sioux Tools has a long and proud heritage of innovation, helping to shape the face of the pneumatic tool industry. Our commitment to continued development in ergonomics and innovative design ensures that we will meet the needs of professionals for many years to come.

Whatever pneumatic tool your work demands, Sioux Tools has the solution.

- Drills
- Assembly Screwdrivers
- Impact Tools
- Aviation Tools
- Finishing Tools
- Specialty Tools
- Metalworking Tools

You'll find Sioux Tools wherever there's a need for quality-built, reliable products, backed by strong dedication to customer satisfaction. We are proud to deliver best in class tools and service to these key industries.

- Woodworking
- Furniture
- Manufactured Housing
- Marine / Boating
- RV
- Trailer Manufacturing
- Aviation
- Mining
- Petro - Chemical

ATI® TOOLS - Where Airframe Tooling Solutions Take Flight

PRECISION AIRFRAME TOOLING SINCE 1938

From Drilling, Countersinking, Riveting, and Bucking, ATI Tools – a soaring member of the Snap-on Industrial Brands family - has the solutions for your airframe production, maintenance, and repair needs.

With over seventy years of experience in airframe tooling, we are your resource for precision tools and technical support. We are committed to product and workplace safety, and continuous innovation and product R&D. ATI delivers tools designed for aluminum and today's advanced composites for

- Military and Commercial Manufacturers
- Airline and MRO's
- Airframe and Sheet Metal Mechanics

Our engineers can create a custom tool solution made to your specific needs.

Put Your Brand in Your Customers' Hands

SNAP-ON INDUSTRIAL'S "CUSTOM BRANDED TOOLS" PROGRAM OFFERS A LINE OF HAND AND POWER TOOLS, TOOL STORAGE, AND TEST EQUIPMENT FEATURING YOUR BRAND'S IDENTITY.

Private Brand Programs

Keep your name in front of your customers and generate additional revenue with Custom-Branded Tools that are packaged and displayed for the Industrial Distribution environment.

Promotion/Recognition Items

We offer a wide variety of products that can be used for promotions, premiums, and award programs.

Master Sets

Master Sets

Master Sets

It's better to have it and not need it than need it and not have it – and with Snap-on Industrial Brands Master Tool Sets, you're almost certain to have the tools you need. These sets contain tools to handle almost any job your shop is likely to see, in both fractional and metric sizes. They includes comprehensive assortments of sockets, ratchets, and accessories in ¼", ⅜", ½", and ¾" drive, for both hand and impact use.

A full complement of wrenches in a number of styles helps you tackle increasingly complex maintenance tasks.
Screwdrivers, pliers, hammers, punches and chisels are included, and specialty items such as gear pullers, saws, scrapers, and other tools for industrial maintenance mechanics and tradesmen round out our unique program.

You'll want to keep your tools safe and secure, and our Master Tool Sets include the storage necessary to do that. Each Master Set includes the tool boxes you need, or the sets may be purchased without the cabinets if desired.

Whatever the industry, our Master Tool Sets will help you keep your equipment and assets working, enabling you to compete more effectively. Get your work done faster, easier, and safer with a Master Tool Set from Snap-on Industrial Brands. All other tool sets are simply ordinary.

MAMMOTH TOOL SET

WSC–1390TB

Master set cabinetry and contents are subject to change and may not be exactly as illustrated. Refer to Appendix for set listings.

Professional industrial cabinets W40RC7-W40TC4 are also included in WSC-1390TB

1,390 PIECE MAMMOTH TOOL SET

The largest tool set in the industry. Contains the following tools:

Product Category	Number of Pieces
Chisel and Punches	27
Clamps	2
Electrical Crimping Pliers	5
Files	12
Gear Pullers	41
Hammers	16
Hand Sockets	417
Hex Keys	85
Holesaw Set	17
Impact Drive Tools	24
Impact Sockets	187
Knives	2
Miscellaneous Tools	23
Pliers	63
Pry Bars	6
Ratchets, Drive Tools, and Accessories	58
Saws and Saw Blades	36
Scrapers	7
Screwdrivers	36
Snips	5
Tool Boxes	6
Torque Wrenches	3
Wrenches	312

Note: Complete set contents are listed in Appendix A

Set Configurations Available

Product Code	Description
WSC-1390TB	Complete Mammoth Tool Set with Tool Boxes (1390 Pieces Total)
WSC-1390	Mammoth Tool Set Only (1384 Pieces)
WSC-1390SAE	Mammoth Tool Set with Fractional Wrenches and Sockets Only Tools Only - 1153 Pieces (Not Pictured)
WSC-1390MM	Mammoth Tool Set with Metric Wrenches and Sockets Only Tools Only - 882 Pieces (Not Pictured)

Tool Boxes Included

W40TC4	40" Wide x 20" Deep 4-Drawer Top Chest
W40RC7	40" Wide x 20" Deep 7-Drawer Roll Cabinet
W53TC8	53" Wide x 20" Deep 8-Drawer Top Chest
W53RC6BS	53" Wide x 20" Deep 6-Drawer Roll Cabinet with Bulk Storage
50721	3-Drawer Service Cart with Lid
50855	37" 1 Shelf Heavy Duty Tall Side Cabinet

Features

- It's better to have it and not need it than need it and not have it - and with this tool set, you're almost certain to have what you need. This set contains the tools to handle almost any job your shop is likely to see, in both fractional and metric sizes. It includes a comprehensive assortment of sockets, ratchets, and accessories in 1/4", 3/8", 1/2", and 3/4" drive, for both hand and impact use. A full complement of wrenches in a number of styles helps you tackle increasingly complex maintenance tasks. A comprehensive assortment of screwdrivers, pliers, hammers, punches and chisels, is there when you need them, and specialty items such as gear pullers, saws, scrapers, and other tools for industrial maintenance mechanics and tradesmen round out this truly Mammoth tool set.
- You'll want to keep your tools safe and secure, and our industry-leading Mammoth Tool Set includes the storage cabinets necessary to do that. Two top-chest / roll-cabinet combinations are included, as well as a side cabinet and rolling three-drawer tool cart. A total of 35 drawers and over 75,000 cubic inches of storage capacity will help you organize your tools effectively. And the mobile tool cart helps bring your tools to the job, where you need them.
- Whatever the industry, this set will help you keep your equipment and assets working, helping you compete more effectively. Get your work done faster, easier, and safer with the Mammoth Tool Set from Snap-on Industrial Brands. All other tool sets are simply ordinary.

MEGA TOOL SET

WSC–960TB

Master set cabinetry and contents are subject to change and may not be exactly as illustrated. Refer to Appendix for set listings.

BAHCO WILLIAMS CDI TORQUE PRODUCTS

960 PIECE MEGA TOOL SET

A comprehensive assortment. Contains the following tools:

Product Category	Number of Pieces
Chisel and Punches	27
Clamps	2
Electrical Crimping Pliers	3
Files	12
Gear Pullers	25
Hammers	16
Hand Sockets	281
Hex Keys	59
Impact Sockets	135
Impact Drive Tools	9
Knives	3
Miscellaneous Tools	24
Pliers	67
Pry Bars	4
Ratchets, Drive Tools, and Accessories	58
Saws and Saw Blades	26
Scrapers	6
Screwdrivers	38
Snips	3
Tool Boxes	4
Torque Wrenches	2
Wrenches	156

Note: Complete set contents are listed in Appendix A

Set Configurations Available

Product Code	Description
WSC-960TB	Complete Mega Tool Set with Tool Boxes (960 Pieces Total)
WSC-960	Mega Tool Set Only (956 Pieces)
WSC-960SAE	Mega Tool Set with Fractional Wrenches and Sockets Only Tools Only - 857 Pieces (Not Pictured)
WSC-960MM	Mega Tool Set with Metric Wrenches and Sockets Only Tools Only - 671 Pieces (Not Pictured)

Tool Boxes Included

W53TC8	53" Wide x 20" Deep 8-Drawer Top Chest
W53RC6BS	53" Wide x 20" Deep 6-Drawer Roll Cabinet with Bulk Storage
50721	3-Drawer Service Cart with Lid
50855	37" 1 Shelf Heavy Duty Tall Side Cabinet

Features

- The Mega Set contains a comprehensive assortment of tools, in both fractional and metric sizes. Includes an extensive assortment of sockets, ratchets, and accessories in 1/4", 3/8", 1/2", and 3/4" drive, for both hand and impact use. A full complement of wrenches in a number of styles helps you tackle increasingly complex maintenance tasks. Over 150 screwdrivers, pliers, hammers, punches and chisels, are included, and specialty items such as gear pullers, saws, scrapers, and other tools for industrial maintenance mechanics and tradesmen round out the Mega Set from Snap-on Industrial Brands.
- Mega Set includes the tool storage cabinets necessary to organize your tools. A top-chest / roll-cabinet combination is included, as well as a side cabinet and rolling three-drawer tool cart. A total of 26 drawers and over 45,000 cubic inches of storage capacity will help you store your tools effectively. The mobile tool cart helps bring your tools to the job, where you need them.
- Get your work done faster, easier, and safer with the Mega Tool Set from Snap-on Industrial Brands. All other tool sets are simply ordinary.

MAXXUM TOOL SET

WSC–680TB

Master set cabinetry and contents are subject to change and may not be exactly as illustrated. Refer to Appendix for set listings.

680 PIECE MAXXUM TOOL SET

Contains the following tools:

Product Catagory	Number of Pieces
Chisel and Punches	27
Clamps	2
Electrical Crimping Pliers	3
Files	11
Hammers	15
Hand Sockets	192
Hex Keys	51
Impact Sockets	87
Impact Drive Tools	12
Knives	2
Miscellaneous Tools	23
Pliers	45
Pry Bars	6
Ratchets, Drive Tools, and Accessories	46
Saws and Saw Blades	13
Scrapers	2
Screwdrivers	29
Snips	3
Tool Boxes	3
Torque Wrenches	2
Wrenches	106

Note: Complete set contents are listed in Appendix A

Set Configurations Available

Product Code	Description
WSC-680TB	Complete Maxxum Tool Set with Tool Boxes (680 Pieces Total)
WSC-680	Maxxum Tool Set Only (677 Pieces)
WSC-680SAE	Maxxum Tool Set with Fractional Wrenches and Sockets Only Tools Only - 494 Pieces (Not Pictured)
WSC-680MM	Maxxum Tool Set with Metric Wrenches and Sockets Only Tools Only - 417 Pieces (Not Pictured)

Tool Boxes Included

W53TC8	53" Wide x 20" Deep 8-Drawer Top Chest
W53RC6BS	53" Wide x 20" Deep 6-Drawer Roll Cabinet with Bulk Storage
50721	3-Drawer Service Cart with Lid

Features

- The Maxxum Set contains a full complement of tools, in both fractional and metric sizes. It includes an assortment of sockets, ratchets, and accessories in 1/4", 3/8", and 1/2" drive, for both hand and impact use. Hand wrenches in a number of styles helps you tackle increasingly complex maintenance tasks. Over 100 screwdrivers, pliers, hammers, punches and chisels, are included, and specialty items such as saws, scrapers, and other tools for industrial maintenance mechanics and tradesmen round out the Maxxum Set from Snap-on Industrial Brands.
- Maxxum includes the tool storage cabinets necessary to organize your tools. A top-chest / roll-cabinet combination is included, as well as a rolling three-drawer tool cart. A total of 26 drawers and over 35,000 cubic inches of storage capacity will help you store your tools effectively. The mobile tool cart helps bring your tools to the job, where you need them.
- Get your work done faster, easier, and safer with the Maxxum Tool Set from Snap-on Industrial Brands. All other tool sets are simply ordinary.

W40TC4

W40RC7

352 PIECE MASTER MAINTENANCE SERVICE SET

Contains the following tools:

Product Category	Number of Pieces
Chisel and Punches	19
Clamps	2
Files	6
Hammers	7
Hand Sockets	116
Impact Drive Tools	4
Impact Sockets	38
Miscellaneous Tools	3
Pliers	15
Ratchets, Drive Tools, and Accessories	28
Saws and Saw Blades	8
Scrapers	1
Screwdrivers	18
Snips	4
Tool Boxes	2
Wrenches	81

Note: Complete set contents are listed in Appendix A

Set Configurations Available

Product Code	Description
WSC-352TB	352 Piece Master Maintenance Service Set with Tool Boxes
WSC-352	Tool Set Only (350 Pieces)

Tool Boxes Included

W40TC4	40" Wide x 20" Deep 4-Drawer Top Chest
W40RC7	40" Wide x 20" Deep 7-Drawer Roll Cabinet

Features

- This set provides the tools necessary for most general service and repair applications. Included are a wide variety of fractional wrenches, hand and impact sockets, and popular 1/4", 3/8" and 1/2" drive ratchets and accessories. An assortment of professional industrial tools such as pliers, screwdrivers, hammers, punches, chisels, and other tools round out the offering.

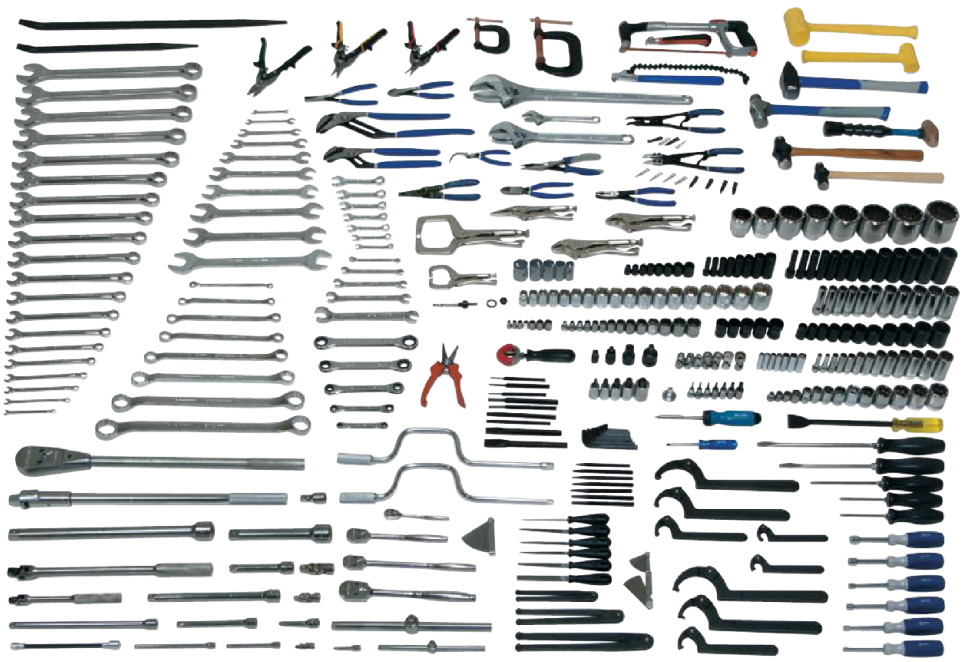

WSC–352

Master set cabinetry and contents are subject to change and may not be exactly as illustrated. Refer to Appendix for set listings.

W40TC4

W40RC7

317 PIECE INTERMEDIATE TECHNICIAN'S TOOL SET

Contains the following tools:

Product Catagory	Number of Pieces
Chisel and Punches	9
Extractor	9
Feeler Gauge	1
Files	4
Hammers	4
Hex Keys	22
Pliers	11
Ratchets, Drive Tools, and Accessories	28
Screwdrivers	8
Sockets	142
Tape Measure	1
Torque Wrenches	2
Wrenches	74

Note: Complete set contents are listed in appendix A

Set Configurations Available

Product Code	Description
WSC-317	317 Piece Diesel Tool Set with Tool Boxes
WSC-317TB	Tool Set Only (315 Pieces)

Tool Boxes Included

W40RC7	40" 4 Drawer Professional Top Chest
W40TC4	40" 7 Drawer Professional Roll Cabinet

Features

- This set provides the tools necessary for many general service and repair applications. Included are a variety of fractional wrenches, hand and impact sockets, and 1/4", 3/8" and 1/2" drive ratchets and accessories. An assortment of professional industrial tools such as pliers, screwdrivers, hammers, punches, chisels, and other tools round out the offering.

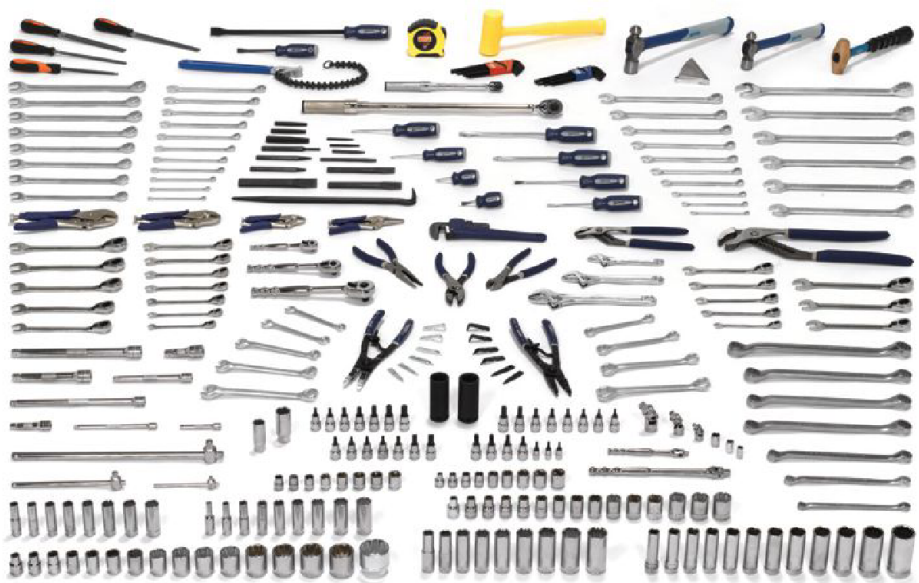

WSC-317

W40TC4

W40RC7

277 PIECE ADVANCED MAINTENANCE SERVICE SET

Contains the following tools:

Product Category	Number of Pieces
Chisel and Punches	17
Files	6
Hammers	3
Hand Sockets	100
Impact Drive Tools	2
Impact Sockets	16
Miscellaneous Tools	8
Pliers	12
Ratchets, Drive Tools, and Accessories	24
Saws and Saw Blades	8
Screwdrivers	18
Tool Boxes	2
Wrenches	61

Note: Complete set contents are listed in Appendix A

Set Configurations Available

Product Code	Description
WSC-277TB	277 Piece Advanced Maintenance Service Set with Tool Boxes
WSC-277	Tool Set Only (275 Pieces)

Tool Boxes Included

W40TC4	40" Wide x 20" Deep 4-Drawer Top Chest
W40RC7	40" Wide x 20" Deep 7-Drawer Roll Cabinet

Features

- This set provides the tools necessary for many general service and repair applications. Included are a variety of fractional wrenches, hand and impact sockets, and 1/4", 3/8" and 1/2" drive ratchets and accessories. An assortment of professional industrial tools such as pliers, screwdrivers, hammers, punches, chisels, and other tools round out the offering.

WSC–277

Master set cabinetry and contents are subject to change and may not be exactly as illustrated. Refer to Appendix for set listings.

50871

50901

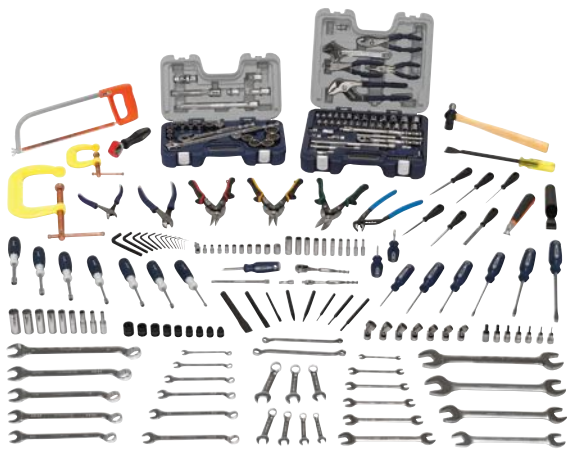

WSC-231

WILLIAMS®

231 PIECE MAINTENANCE TOOL SET

Contains the following tools:

Product Catagory	Number of Pieces
C-Clamps	2
Chisels & Punches	9
Hammers	1
Files	6
Hacksaws	1
Nutdrivers	7
Pliers	6
Ratchet, Drive Tools & Accessories	27
Scrapers	2
Screwdrivers & Bits	21
Snips	3
Sockets	102
Wrenches	44

Note: Complete set contents are listed in appendix A

Set Configurations Available

Product Code	Description
WSC-231TB	233 Piece Maintenace Tool Set
WSC-231	Tool Set Only (231 Pieces)

Tool Boxes Included

50871	27" 10 Drawer Heavy Duty Roller Bearing Top Chest
50901	27" 8 Drawer Heavy Duty Roller Bearing Roll Cabinet

Features

- This set provides the tools necessary for most general service and repair applications. Included are a wide variety of adjustable wrenches, locking pliers, screwdrivers, hammers and 1/4" 3/8" and 1/2" drive ratchets and accessories. An assortment of professional industrial tools such as punches, chisels and pliers are also included.

50721

WSC-130

WILLIAMS®

130 PIECE MAINTENANCE TOOL SET

Contains the following tools:

Product Catagory	Number of Pieces
Chisels & Punches	1
Hammers	2
Hex Key Set	13
Pliers	10
Ratchet, Drive Tools & Accessories	21
Screwdrivers & Bits	21
Sockets	42
Wrenches	20

Note: Complete set contents are listed in appendix A

Set Configurations Available

Product Code	Description
WSC-130TB	132 Piece Maintenace Tool Set
WSC-130	Tool Set Only (130 Pieces)

Tool Boxes Included

50721	3 Drawer Service Cart with Lid

Features

- This set provides the tools necessary for most general service and repair applications. Included are a wide variety of adjustable wrenches, locking pliers, screwdrivers, hammers and 1/4" 3/8" and 1/2" drive ratchets and accessories. An assortment of professional industrial tools such as punches, chisels and pliers are also included.

BAHCO WILLIAMS

173 PIECE INTERMEDIATE MAINTENANCE SET

Contains the following tools:

Product Category	Number of Pieces
Chisel and Punches	12
Files	6
Hammers	1
Hand Sockets	66
Miscellaneous Tools	6
Pliers	5
Ratchets, Drive Tools, and Accessories	16
Saws and Saw Blades	1
Screwdrivers	15
Tool Boxes	2
Wrenches	43

Note: Complete set contents are listed in Appendix A

Set Configurations Available

Product Code	Description
WSC-173TB	173 Piece Intermediate Maintenance Service Set with Tool Boxes
WSC-173	Tool Set Only (171 Pieces)

Tool Boxes Included

W26TC4	26" Wide x 20" Deep 4-Drawer Top Chest
W26RC7	26" Wide x 20" Deep 7-Drawer Roll Cabinet

Features

- This set provides the tools necessary for many general service and repair applications. Included are a variety of fractional wrenches, hand sockets, and 1/4", 3/8" and 1/2" drive ratchets and accessories. An assortment of professional industrial tools such as punches, chisels, and pliersis also included.

WSC–173

W40RC7

WILLIAMS®

172 PIECE HEAVY MAINTENANCE SERVICE SET

Contains the following tools:

Product Category	Number of Pieces
Chisel and Punches	17
Clamps	2
Feeler Gauge Set	1
Hammers	6
Hand Sockets	56
Pliers	8
Ratchets, Drive Tools, and Accessories	17
Screwdrivers	10
Tool Box	1
Wrenches	54

Note: Complete set contents are listed in Appendix A

Set Configurations Available

Product Code	Description
WSC-172TB	172 Piece Heavy Maintenance Service Set with Tool Box
WSC-172	Tool Set Only (171 Pieces)

Tool Box Included

W40RC7	40" Wide x 20" Deep 7-Drawer Roll Cabinet

Features

- Designed for the shop that performs maintenance on heavy equipment, this set emphasizes larger tools, including combination wrenches up to 2" and sockets up to 1-3/4". Ratchets, drive tools, and fractional sockets in 3/8", 1/2", and 3/4" drive are included, as well as a complement of screwdrivers, pliers, chisels, punches, hammers, and other common tools. If you need a basic assortment of beefy tools, this is the set for you.

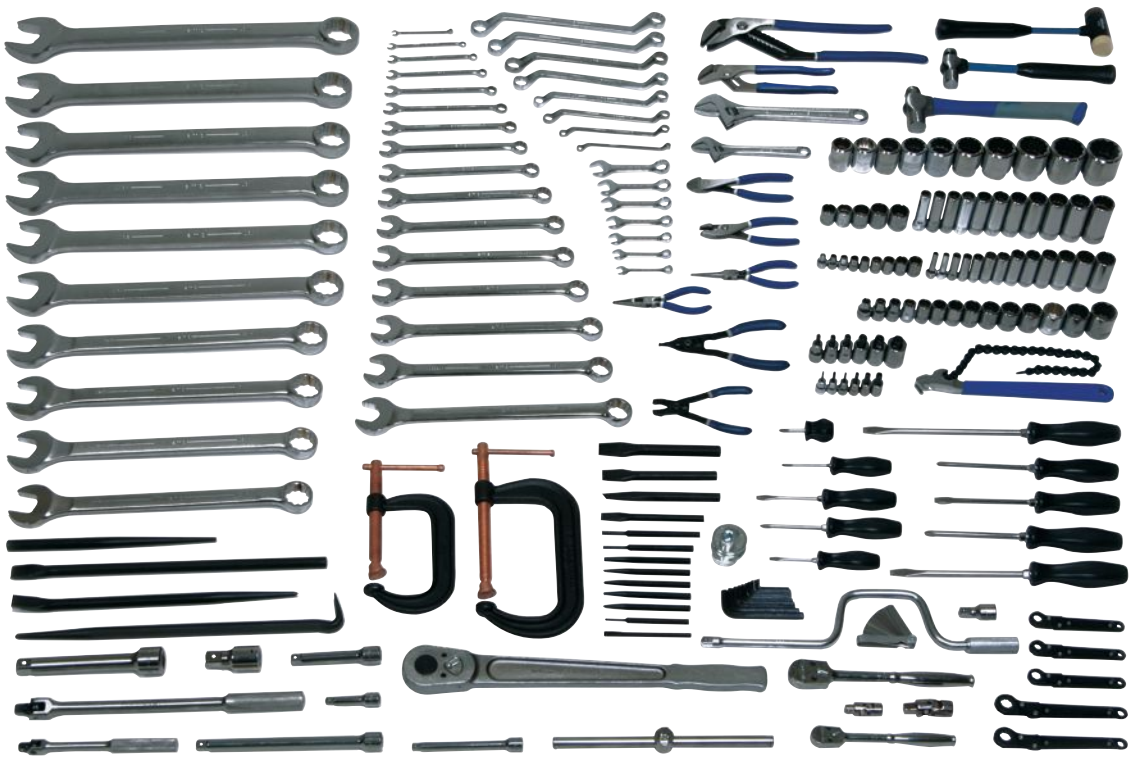
WSC–172

BAHCO WILLIAMS

167 PIECE ELECTRICAL MAINTENANCE SERVICE SET

Contains the following tools:

Product Category	Number of Pieces
Electrical Specialty Tools	2
Hammers	3
Hand Sockets	28
Miscellaneous Tools	9
Pliers	8
Pliers - Electrical	12
Pliers - Insulated	5
Ratchets, Drive Tools, and Accessories	7
Saws and Saw Blades	32
Screwdrivers	14
Screwdrivers - Insulated	11
Tool Box	1
Wrenches	35

W40RC7

Note: Complete set contents are listed in Appendix A

Set Configurations Available

Product Code	Description
WSC-167TB	167 Piece Electrical Maintenance Service Set with Tool Box
WSC-167	Tool Set Only (166 Pieces)

Tool Box Included

W40RC7	40" Wide x 20" Deep 7-Drawer Roll Cabinet

Features

- Designed to satisfy electrical maintenance tool requirements, this set has both the standard hand tools and special tools needed to accomplish a wide variety of electrical maintenance and installation. Start with 1/4" and 3/8" drive sockets and accessories, hammers, and hand wrenches, and add the special items needed for electrical work:
- Insulated and non-insulated pliers and screwdrivers.
- A electrician's holesaw set and a 10-pack of assorted recip blades.
- A comprehensive assortment of electrical strippers / crimpers / cutters.
- Drywall, hacksaw, and toolbox saws.
- And a full-size roll cabinet to organize, store, and move your tool set. Unique in the industry, this set will help you get those critical electrical maintenance tasks done quickly, efficiently, professionally, and safely.

WSC-167

Master set cabinetry and contents are subject to change and may not be exactly as illustrated. Refer to Appendix for set listings.

W26RC7

WSC–102

WILLIAMS®

102 PIECE BASIC MACHINE REPAIR SET

Contains the following tools:

Product Category	Number of Pieces
Chisel and Punches	7
Feeler Gauge Set	1
Hammers	4
Hand Sockets	38
Pliers	6
Ratchets, Drive Tools, and Accessories	5
Screwdrivers	5
Tool Box	1
Wrenches	35

Note: Complete set contents are listed in Appendix A

Set Configurations Available

Product Code	Description
WSC-102TB	102 Piece Basic Machine Repair Set with Tool Box
WSC-102	Tool Set Only (101 Pieces)

Tool Box Included

W26RC7	26" Wide x 20" Deep 7-Drawer Roll Cabinet

Features

- Designed for the shop that requires a basic tool set for machine repair, this set includes the popular sizes in ¼" and ½" drive sockets, an assortment of wrenches, and the most commonly used pliers, screwdrivers, and hammers.

W40RC7

WSC–137

BAHCO® WILLIAMS®

137 PIECE INDUSTRIAL PLUMBING & PIPEFITTING TOOL SET

Contains the following tools:

Product Category	Number of Pieces
Chisel and Punches	12
Clamps	1
Hammers	3
Miscellaneous Tools	12
Pipe Specialty Tools	19
Pliers	8
Screwdrivers	9
Tool Box	1
Wrenches	36
Pipe Wrenches	4
Saws and Blades	32

Note: Complete set contents are listed in Appendix A

Set Configurations Available

Product Code	Description
WSC-137TB	137 Piece Industrial Plumbing and Pipefitting Tool Set with Tool Box
WSC-137	Tool Set Only (136 Pieces)

Tool Box Included

W40RC7	40" Wide x 20" Deep 7-Drawer Roll Cabinet

Features

- This set is geared specifically for industrial plumbers and pipefitters. It includes an assortment of basic hand tools such as wrenches, pliers, hammers, and screwdrivers. What really makes this set special is the assortment of everyday and specialized plumbing and pipefitting tools included:
- 4 pipe wrenches from 12" through 42" length handle pipe sizes through 5" OD.
- A pair of Williams' famous FJ-20 flange jacks.
- 3 sets of our unique, professional pipe nipple removal/inserting tools covering ⅛" NPT through 1-¼" NPT pipe sizes.
- Tube cutters and flaring tools.
- Ratcheting valve and flare nut wrenches.
- A toolbox saw, drywall saw, and hacksaw and blades.
- 2 utility knives and a pack of blades.
- A plumber's holesaw set and a 10-pack of assorted recip blades.
- And a full-size roll cabinet to organize, store, and move your tool set. Unique in the industry, this set will help you get those critical pipefitting and plumbing tasks done quickly, efficiently, professionally, and safely.

BAHCO WILLIAMS

95 PIECE BASIC ELECTRICAL REPAIR SET

Contains the following tools:

Product Category	Number of Pieces
Hammers	1
Hand Sockets	22
Pliers	5
Pliers - Electrical	4
Pliers - Insulated	4
Ratchets, Drive Tools, and Accessories	7
Screwdrivers	13
Screwdrivers - Insulated	10
Tool Box	1
Wrenches	28

Note: Complete set contents are listed in appendix A

Set Configurations Available

Product Code	Description
WSC-95TB	95 Piece Electrical Repair Set with Tool Box
WSC-95	Tool Set Only (94 Pieces)

Tool Box Included

50721	3-Drawer Service Cart with Lid

Features

- Designed to satisfy electrical maintenance tool requirements, this set has both the standard hand tools and special tools needed to accomplish a wide variety of electrical maintenance and installation. Start with ¼" and ⅜" drive sockets and accessories.
- Insulated and non-insulated pliers and screwdrivers.
- A electrician's holesaw set and a 10-pack of assorted recip blades.
- A comprehensive assortment of electrical strippers / crimpers / cutters.
- Drywall, hacksaw, and toolbox saws.
- And a 3-drawer roll cart helps organize, store, and move your tool set. Unique in the industry, this set will help you get those critical electrical maintenance tasks done quickly, efficiently, professionally, and safely.

50721

WSC–95

WILLIAMS

88 PIECE GENERAL INDUSTRIAL REPAIR SET

Contains the following tools:

Product Category	Number of Pieces
Clamp	1
Feeler Gauge Set	1
Hand Sockets	28
Pliers	4
Ratchets, Drive Tools, and Accessories	7
Screwdrivers	8
Tool Box	1
Wrenches	32

Note: Complete set contents are listed in appendix A

Set Configurations Available

Product Code	Description
WSC-88TB	88 Piece General Industrial Repair Set with Tool Box
WSC-88	Tool Set Only (87 Pieces)

Tool Box Included

W26RC7	26" Wide x 20" Deep 7-Drawer Roll Cabinet

Features

- Designed for the shop that requires a basic industrial tool set, this set includes the popular sizes in ⅜" and ½" drive sockets, an assortment of wrenches, and the most commonly used pliers and screwdrivers.

W26RC7

WSC–88

Master set cabinetry and contents are subject to change and may not be exactly as illustrated. Refer to Appendix for set listings.

50721

WSC–80

WILLIAMS

80 PIECE GENERAL SERVICE SET

Contains the following tools:

Product Category	Number of Pieces
Chisel and Punches	8
Feeler Gauge Set	1
Hammer	1
Hand Sockets	24
Pliers	6
Ratchets, Drive Tools, and Accessories	16
Screwdrivers	6
Tool Box	1
Wrenches	17

Note: Complete set contents are listed in appendix A

Set Configurations Available

Product Code	Description
WSC-80TB	80 Piece General Service Set with Tool Box
WSC-80	Tool Set Only (79 Pieces)

Tool Box Included

50721	3-Drawer Service Cart with Lid

50721

WSC–41

WILLIAMS

41 PIECE BASIC SERVICE SET

Contains the following tools:

Product Category	Number of Pieces
Chisel and Punches	3
Hammer	1
Hand Sockets	14
Pliers	3
Ratchets, Drive Tools, and Accessories	5
Screwdrivers	3
Tool Box	1
Wrenches	11

Note: Complete set contents are listed in appendix A

Set Configurations Available

Product Code	Description
WSC-41TB	41 Piece Basic Service Set with Tool Box
WSC-41	Tool Set Only (40 Pieces)

Tool Box Included

50721	3-Drawer Service Cart with Lid

Features

- Designed for the shop that requires a basic industrial tool set, this set includes the popular sizes in 3/8" drive sockets, an assortment of wrenches, and commonly used pliers and screwdrivers.

BAHCO WILLIAMS

225 PIECE METRIC MAINTENANCE SERVICE SET

Contains the following tools:

Product Category	Number of Pieces
Chisel and Punches	18
Hammers	6
Hand Sockets	120
Pliers	10
Ratchets, Drive Tools, and Accessories	8
Screwdrivers	15
Tool Box	1
Torque Wrench	1
Wrenches	46

Note: Complete set contents are listed in Appendix A

Set Configurations Available

Product Code	Description
MSC-225TB	225 Piece Heavy Maintenance Service Set with Tool Box
MSC-225	Tool Set Only (224 Pieces)

Tool Box Included

W40RC7	40" Wide x 20" Deep 7-Drawer Roll Cabinet

Features

- Designed for the shop that requires metric tools for maintenance. 1/4", 3/8", and 1/2" drive tools are included, as well as a full assortment of wrenches, pliers, screwdrivers, and other commonly used hand tools.

W40RC7

MSC-225

WILLIAMS

118 PIECE METRIC HEAVY EQUIPMENT SERVICE SET

Contains the following tools:

Product Category	Number of Pieces
Chisel, Punches, and Prybars	7
Hammers	3
Hand Sockets	42
Pliers	4
Ratchets, Drive Tools, and Accessories	12
Screwdrivers	10
Tool Box	1
Wrenches	39

Note: Complete set contents are listed in Appendix A

Set Configurations Available

Product Code	Description
MSC-118TB	118 Piece Metric Heavy Equipment Service Set with Tool Box
MSC-118	Tool Set Only (117 Pieces)

Tool Box Included

W40RC7	40" Wide x 20" Deep 7-Drawer Roll Cabinet

Features

- Designed for the shop that requires metric tools for maintenance of heavy equipment. 3/8", 1/2", and 3/4" drive tools are included, as well as a basic assortment of wrenches, pliers, screwdrivers, and other commonly used hand tools.

W40RC7

MSC-118

Master set cabinetry and contents are subject to change and may not be exactly as illustrated. Refer to Appendix for set listings.

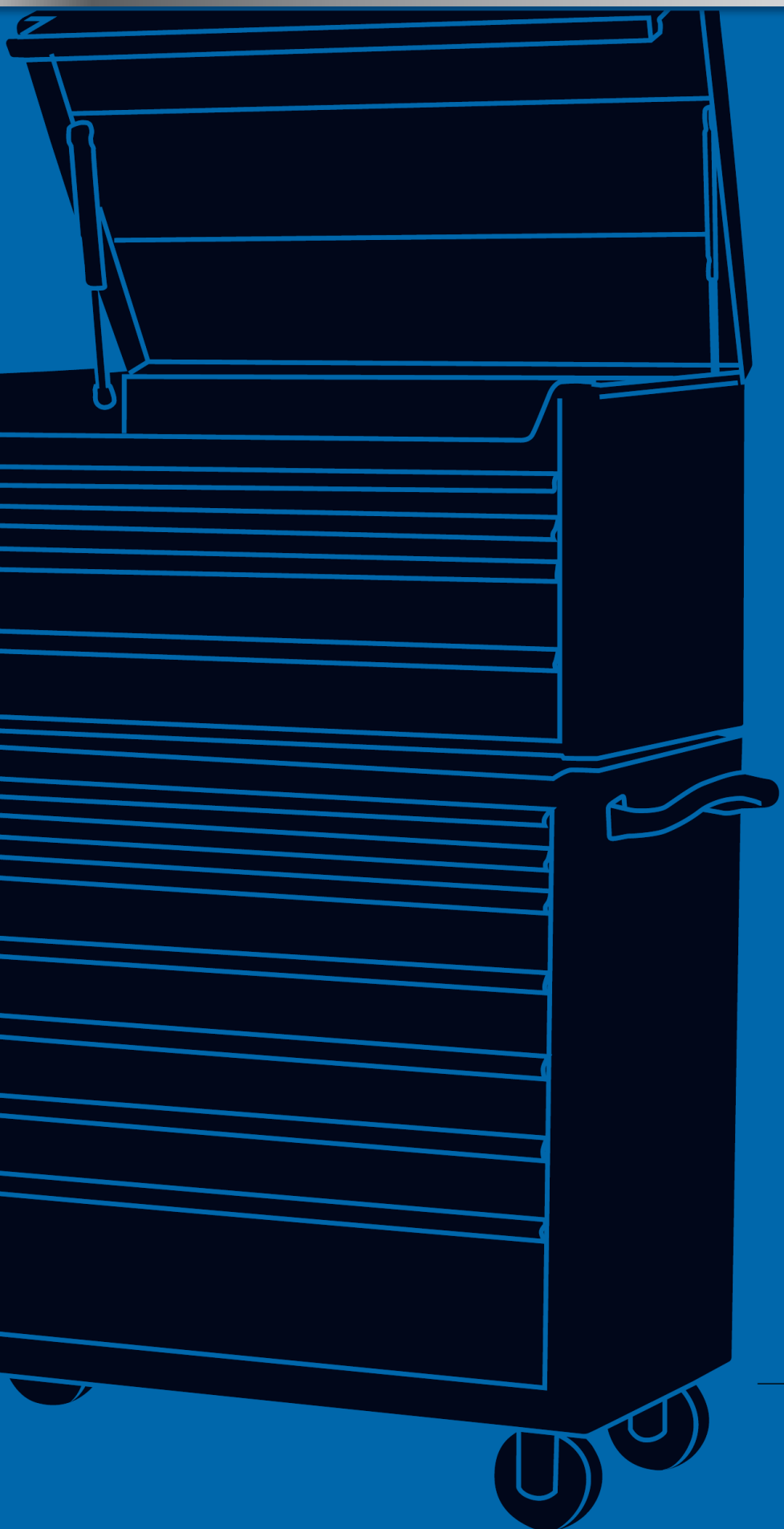

Tool Storage

Tool Storage

Professional:

Williams Professional Series tool storage units offer professional industrial tool users the most comprehensive set of high quality features available. All units feature double-wall construction to provide extra load-bearing capacity and reduce racking when rolled over uneven surfaces. They are manufactured from high-quality Class I steel to enhance their strength and finish. The steel used runs from 20 gauge to 16 gauge depending on location, and all panels, joints, and seems are engineered to provide maximum service and durability.

Drawers close securely with a positive latching mechanism that keeps them from opening during movement, and roll smoothly on 75-pound full extension drawer slides that are easily removed with our “quick-disconnect” lever. And drawer liners are included free of charge to help preserve that professional appearance.

Gas struts in the lids make the top easy to open and close, and ball-bearing casters with locks on the swivel casters make for easy operation. High luster paint protects against scratches, peeling, blistering, and corrosion, adding up to years of service. When only the best will do, Williams Professional Series tool boxes are the ones to choose.

Heavy-Industrial:

Williams Heavy-Industrial Series roll cabinets and top chests are ideal for workshops in the most demanding industries. These boxes will withstand the heavy loads that come with heavy tools. Drawers deeper than 2" feature two pairs of 60-pound drawer slides and corners are triple-layered steel for maximum strength.

The frame is reinforced using 14 gauge plates in the front of each cabinet. Full height and width triple channel walls add rigidity. The drawers are made of 18 gauge heavy-duty steel and equipped with a safety locking system that keeps them from opening inadvertently. High gloss paint is scratch resistant and pre-cut drawer liners are included. Williams Heavy-Industrial Series tool storage is the ideal choice for heavy industry.

Commercial:

Williams Commercial Series tool boxes offer the typical maintenance shop storage solutions that feature great performance and rugged good looks. Designed for use in day-to-day commercial operations, these cabinets are made of heavy gauge metal and finished with high-gloss powder coat paint for years of carefree use. The frames are reinforced for rigidity using 14 gauge channels on the bottom, and double-wall construction adds strength and durability.

Stronghold drawer detents held keep the drawers shut, and ball-bearing drawer slides operate smoothly when you open the drawer. All roll cabinets feature 5"x2" casters for ease of movement, and pre-cut drawer liners will help preserve your tool boxes and keep them looking good.

Super-Value Series:

Williams Super-Value Series cabinets and top chests represent an outstanding set of features at an attractive price. Great for moderate duty applications, they feature ball-bearing drawer slides on all drawers, double-wall construction, and powder-coat paint. Heavy-duty casters and pre-cut drawer liners help make Super-Value series tool storage from Williams a great value.

WILLIAMS

53" PROFESSIONAL SERIES TOOL CABINETS

Designed for industrial use

Product Code	Description
W53TC8	53" Wide x 20" Deep 8-Drawer Top Chest
W53RC13	53" Wide x 20" Deep 13-Drawer Roll Cabinet

W53TC8 Top Chest Overall Dimensions

Capacity (cu. in.)	Width (inches)	Depth (inches)	Height (inches)
12970	53 13/32	19 13/16	19 7/16

Top Chest Drawer Sizes

Number	Width (inches)	Depth (inches)	Height (inches)
Top Compartment	52 5/16	18 7/32	4 23/32
2	11 7/32	17 1/2	1 5/8
2	11 7/32	17 1/2	3 5/8
2	34 23/32	17 1/2	1 5/8
2	34 23/32	17 1/2	3 5/8

W53RC13 Roll Cabinet Overall Dimensions

Capacity (cu. in.)	Width (inches)	Depth (inches)	Height (inches)
20340	53 13/32	19 13/16	38 1/8

Roll Cabinet Drawer Sizes

Number	Width	Depth	Height
2	11 7/32	17 1/2	1 23/32
3	11 7/32	17 1/2	3 23/32
1	11 7/32	17 1/2	11 23/32
2	34 23/32	17 1/2	1 5/8
4	34 23/32	17 1/2	3 5/8
1	34 23/32	17 1/2	7 5/8

Features

Made in U.S.A.

- Made of High-Quality Class I steel to enhance strength and finish.
- Double wall construction provides strength.
- Reinforcement corner gussets add strength and reduce racking.
- 2" mounting centers provide flexibility in arranging drawers to individual needs
- Drawers equipped with positive latching drawer retention to prevent unwanted drawer opening.
- All drawers equipped with 75 pound full extension ball bearing slides with quick disconnect.
- All 4" and deeper drawers provide for adding additional slides to double drawer capacity.
- Rolled hem on all drawers provide superior strength, rigidity and safety.
- Casters absorb vibrations transmitted to frame while moving on uneven surfaces.
- Casters equipped with pedal brake and ball bearings for easy operation.
- High luster paint protects against scratches, pealing, blistering and corrosion.
- Paint pretreatment process both sprays and immerses boxes for added corrosion protected.
- Drawer liners included at no extra charge.
- Gas struts in lid of chest make lid easy to open and close.
- Two point locking design adds extra security on all chests.

W53TC8

W53RC13

W53RC6BS

Bulk Storage Area

WILLIAMS

53" PROFESSIONAL SERIES ROLL CABINET

Designed for industrial use

Product Code	Description
W53RC6BS	53" Wide x 20" Deep 6-Drawer Roll Cabinet with Bulk Storage

W53RC6BS Roll Cabinet Overall Dimensions

Capacity (cu. in.)	Width (inches)	Depth (inches)	Height (inches)
23972	53 13/32	19 13/16	38 1/8

Roll Cabinet Drawer Sizes

Number	Width (inches)	Depth (inches)	Height (inches)
5	34 13/32	17 1/2	3 5/8
1	34 23/32	17 1/2	7 5/8
Bulk Section	16	19	29

Features

Made in U.S.A.

- Wide drawers to hold long tools such as pry bars and extensions.
- Bulk section with adjustable shelf perfect for storing large, bulky tools.
- Made of High-Quality Class I steel to enhance strength and finish.
- Double wall construction provides strength.
- Reinforcement corner gussets add strength and reduce racking.
- 2" mounting centers provide flexibility in arranging drawers to individual needs.
- Drawers equipped with positive latching drawer retention to prevent unwanted drawer opening.
- All drawers equipped with 75 pound full extension ball bearing slides with quick disconnect.
- All 4" and deeper drawers provide for adding additional slides to double drawer capacity.
- Rolled hem on all drawers provide superior strength, rigidity and safety.
- Casters absorb vibrations transmitted to frame while moving on uneven surfaces.
- Casters equipped with pedal brake and ball bearings for easy operation.
- High luster paint protects against scratches, pealing, blistering and corrosion.
- Paint pretreatment process both sprays and immerses boxes for added corrosion protected.
- Drawer liners included at no extra charge.

WILLIAMS

40" PROFESSIONAL SERIES TOOL CABINETS

Designed for industrial use

Product Code	Description
W40TC4	40" Wide x 20" Deep 4-Drawer Top Chest
W40RC7	40" Wide x 20" Deep 7-Drawer Roll Cabinet

Color Options: Standard color is red. To order in an optional color, simply add the appropriate color code to the end of the product code. Example: To order #W40TC4 in Blue, specify product code W40TC4BL

W40TC4 Top Chest Overall Dimensions

Capacity (cu. in.)	Width (inches)	Depth (inches)	Height (inches)
9746	40 1/32	19 13/16	19 7/16

Top Chest Drawer Sizes

Number	Width	Depth	Height
Top Compartment	39 29/32	18 23/32	4 23/32
2	34 11/16	17 17/32	1 13/32
2	34 11/16	17 17/32	3 19/32

W40RC7 Roll Cabinet Overall Dimensions

Capacity (cu. in.)	Width (inches)	Depth (inches)	Height (inches)
15253	40	19 13/16	37 7/8

Roll Cabinet Drawer Sizes

Number	Width	Depth	Height
2	34 11/16	17 17/32	1 13/32
4	34 11/16	17 17/32	3 19/32
1	34 11/16	17 17/32	7 21/32

Features

- Made of High-Quality Class I steel to enhance strength and finish.
- Double wall construction provides strength.
- Reinforcement corner gussets add strength and reduce racking.
- 2" mounting centers provide flexibility in arranging drawers to individual needs.
- Drawers equipped with positive latching drawer retention to prevent unwanted drawer opening.
- All drawers equipped with 75 pound full extension ball bearing slides with quick disconnect.
- All 4" and deeper drawers provide for adding additional slides to double drawer capacity.
- Rolled hem on all drawers provide superior strength, rigidity and safety.
- Casters absorb vibrations transmitted to frame while moving on uneven surfaces.
- Casters equipped with pedal brake and ball bearings for easy operation.
- High luster paint protects against scratches, pealing, blistering and corrosion.
- Paint pretreatment process both sprays and immerses boxes for added corrosion protected.
- Drawer liners included at no extra charge.
- Gas struts in lid of chest make lid easy to open and close.
- Two point locking design adds extra security on all chests.

Color Options

Red: Standard
Black: B
Blue: BL

W40TC4

W40RC7

Color Options

Red: Standard
Black: B
Blue: BL

WILLIAMS®

26" PROFESSIONAL SERIES TOOL CABINET

Designed for industrial use

Product Code	Description
W26TC4	26" Wide x 20" Deep 4-Drawer Top Chest
W26RC7	26" Wide x 20" Deep 7-Drawer Roll Cabinet

Color Options: Standard color is red. To order in an optional color, simply add the appropriate color code to the end of the product code. Example: To order #W26TC4 in Blue, specify product code W26TC4BL

W26TC4 Top Chest Overall Dimensions

Capacity (cu. in.)	Width (inches)	Depth (inches)	Height (inches)
6180	26 23/32	19 13/16	19 13/32

W26RC7 Roll Cabinet Overall Dimensions

Capacity (cu. in.)	Width (inches)	Depth (inches)	Height (inches)
9374	26	19 13/16	37 7/8

Top Chest Drawer Sizes

Number	Width	Depth	Height
Top Compartment	26 19/32	18 23/32	4 23/32
2	21 3/8	17 17/32	1 13/32
2	21 3/8	17 17/32	3 19/32

Roll Cabinet Drawer Sizes

Number	Width (inches)	Depth (inches)	Height (inches)
2	21 3/8	17 11/32	1 15/32
4	21 3/8	17 11/32	3 19/32
1	21 3/8	17 11/32	7 21/32

Features

- Made of High-Quality Class I steel to enhance strength and finish.
- Double wall construction provides strength.
- Reinforcement corner gussets add strength and reduce racking.
- 2" mounting centers provide flexibility in arranging drawers to individual needs.
- Drawers equipped with positive latching drawer retention to prevent unwanted drawer opening.
- All drawers equipped with 75 pound full extension ball bearing slides with quick disconnect.
- All 4" and deeper drawers provide for adding additional slides to double drawer capacity.
- Rolled hem on all drawers provide superior strength, rigidity and safety.
- Casters absorb vibrations transmitted to frame while moving on uneven surfaces.
- Casters equipped with pedal brake and ball bearings for easy operation.
- High luster paint protects against scratches, pealing, blistering and corrosion.
- Paint pretreatment process both sprays and immerses boxes for added corrosion protected.
- Drawer liners included at no extra charge.
- Two point locking design adds extra security on all chests.

WILLIAMS®

HEAVY-INDUSTRIAL 73" ROLL CABINET

Heavy-Industrial roll cabinet designed for the toughest work environments

Product Code	Description
50990	73" 21-Drawer Heavy Duty Roll Cabinet

Color Options: Standard color is red. To order in an optional color, simply add the appropriate color code to the end of the product code.
Example: To order #50990 in Blue, specify product code 50990BL

50990 Roll Cabinet Overall Dimensions

Capacity (cu. in.)	Width (inches)	Depth (inches)	Height (inches)
29,477	80 7/32	24 9/16	43 1/16

Roll Cabinet Drawer Sizes

Number	Width (inches)	Depth (inches)	Height (inches)
Left side:			
1	50	22	4 1/4
1	23	22	2
2	23	22	3 1/8
2	23	22	4 1/4
1	23	22	6 7/16
Center:			
1	23	22	2
2	23	22	3 1/8
1	23	22	4 1/4
1	23	22	10 13/16
Right side:			
4	16 9/16	22	2
2	16 9/16	22	3 1/8
3	16 9/16	22	4 1/4

Features

- High gloss powder coat paint is scratch & chemical resistant
- Stainless steel work surface
- Heavy gauge metal for a lifetime of use
- Double wall construction for greater strength and durability
- Heavy duty 5" x 2" casters on cabinets
- Aluminum corner trim
- Handles on both side of cabinet
- Two pairs of 120 pounds rated ball bearing slides on all drawers over 3" deep.
- Anti-skid drawer liners included
- Overal width with handles is 80¼"

Color Options

Red: Standard
Black: B
Blue: BL

50990

50990B

50990BL

Color Options

Red: Standard
Black: B
Blue: BL

WILLIAMS®

HEAVY-INDUSTRIAL 54" ROLL CABINET & CANOPY

Heavy-Industrial roll cabinet designed for the toughest work environments

Product Code	Description
50885	54" Wide x 24-1/2" Deep Super Heavy Duty Roll Cabinet
50884	54" Wide x 24-3/8" Deep Super Heavy Duty Canopy

Color Options: Standard color is red. To order in an optional color, simply add the appropriate color code to the end of the product code.
Example: To order #50885 in Blue, specify product code 50885BL

50885 Roll Cabinet Overall Dimensions

Capacity (cu. in.)	Width (inches)	Depth (inches)	Height (inches)
25,304	53 ½	24 ½	43

Roll Cabinet Drawer Sizes

Number	Width (inches)	Depth (inches)	Height (inches)
1	50	22	4 ¼
2	23	22	2
4	23	22	3
2	23	22	4 ¼
1	23	22	6 7/16
1	23	22	10 ½

50884 Canopy Overall Dimensions

Capacity (cu. in.)	Width (inches)	Depth (inches)	Height (inches)
27,372	53	24 ⅜	27 ¾

Features

- Frame is reinforced using 14 gauge plates on the front of cabinet
- Rigidity of frame is significantly increased with full height & width triple channel wall
- Three layers of metal guard the corners with interlock corner design
- Two pairs of 120 lb. rated ball bearing drawer slides on all drawers except 2" drawers
- 6"x2" precision ball bearing casters made of high tech thermoplastic rubber.
- Casters absorb vibrations transmitted to frame while moving on uneven surface
- Casters equipped with pedal brake and ball bearings for easy operation
- All drawers equipped with safe-lock system & made of 18 gauge heavy duty steel
- Extruded aluminum drawer handle trim
- Red high gloss powder coat paint is scratch resistant
- Drawer liners included at no extra charge
- Gas struts in lid of chest make lid easy to open and close

WILLIAMS

HEAVY-INDUSTRIAL SERIES 42" TOOL CABINETS

Heavy-Industrial-grade tool cabinets with ball bearing drawer slides for rugged service in the toughest work environments

Product Code	Description
50860	42" Wide x 24" Deep Industrial 4-Drawer Top Chest
50890	42" Wide x 24" Deep Industrial 5-Drawer Roll Cabinet

Color Options: Standard color is red. To order in an optional color, simply add the appropriate color code to the end of the product code.
Example: To order #50860 in Blue, specify product code 50860BL

50860 Top Chest Overall Dimensions

Capacity (cu. in.)	Width (inches)	Depth (inches)	Height (inches)
13798	41 ½	24 ½	22 ¾

Top Chest Drawer Sizes

Number	Width (inches)	Depth (inches)	Height (inches)
2	38	22	2
1	38	22	4 ¼
1	38	22	6 7/16

50890 Roll Cabinet Overall Dimensions

Capacity (cu. in.)	Width (inches)	Depth (inches)	Height (inches)
21051	41 ½	24 ½	42 ⅛

Roll Cabinet Drawer Sizes

Number	Width (inches)	Depth (inches)	Height (inches)
3	38	22	4 ¼
1	38	22	6 7/16
1	38	22	8 ½

50883 Canopy Overall Dimensions

Capacity (cu. in.)	Width (inches)	Depth (inches)	Height (inches)
8,896	41	18 ¼	23 ⅞

Features

- Frame is reinforced using 14 gauge plates on the front of cabinet.
- Rigidity of frame is significantly increased with full height & width triple channel wall.
- Three layers of metal guard the corners with interlock corner design.
- TWO pairs of 120 lb. rated ball bearing drawer slides on all drawers except 2" drawers.
- 6"x2" precision ball bearing casters made of high tech thermoplastic rubber.
- Casters absorb vibrations transmitted to frame while moving on uneven surfaces.
- Casters equipped with pedal brake and ball bearings for easy operation.
- All drawers equipped with safe-lock system & made of 18 gauge heavy duty steel.
- Extruded aluminum drawer handle trim.
- Red high gloss powder coat paint is scratch resistant.
- Drawer liners included at no extra charge.
- Gas struts in lid of chest make lid easy to open and close.

Color Options

Red: Standard
Black: B
Blue: BL

50883

50890

Color Options

Red: Standard
Black: B
Blue: BL

WILLIAMS

HEAVY-INDUSTRIAL SERIES 35" TOOL CABINETS

Heavy-Industrial roll cabinet designed for the toughest work environments

Product Code	Description
50881	35" Wide x 18" Deep Super Heavy Duty Top Chest
50887	35" Wide x 18" Deep Super Heavy Duty Canopy

Color Options: Standard color is red. To order in an optional color, simply add the appropriate color code to the end of the product code. Example: To order #50881 in Blue, specify product code 50881BL

50881 Top Chest Overall Dimensions

Capacity (cu. in.)	Width (inches)	Depth (inches)	Height (inches)
9,041	35	18 3/4	22 3/4

Top Chest Drawer Sizes

Number	Width (inches)	Depth (inches)	Height (inches)
2	31	16	2
2	31	16	3
1	31	16	4 1/4

50887 Roll Cabinet Overall Dimensions

Capacity (cu. in.)	Width (inches)	Depth (inches)	Height (inches)
14,230	35	18 3/4	42

Top Chest Drawer Sizes

Number	Width (inches)	Depth (inches)	Height (inches)
2	38	22	2
1	38	22	4 1/4
1	38	22	6 7/16

Color Options

Red: Standard
Black: B
Blue: BL

WILLIAMS

HEAVY-INDUSTRIAL SERIES 27" TOOL CABINETS

Heavy-Industrial roll cabinet designed for the toughest work environments

Product Code	Description
50880	27" Wide x 18" Deep Super Heavy Duty Roll Cabinet
50888	27" Wide x 18" Deep Super Heavy Duty Canopy

Color Options: Standard color is red. To order in an optional color, simply add the appropriate color code to the end of the product code. Example: To order #50880 in Blue, specify product code 50880BL

50880 Top Chest Overall Dimensions

Capacity (cu. in.)	Width (inches)	Depth (inches)	Height (inches)
7,217	26 1/2	18 3/4	22 3/4

Top Chest Drawer Sizes

Number	Width (inches)	Depth (inches)	Height (inches)
2	23	16	2
2	23	16	3
1	23	16	4 1/4

50888 Roll Cabinet Overall Dimensions

Capacity (cu. in.)	Width (inches)	Depth (inches)	Height (inches)
9,177	27	18 3/4	42

Top Chest Drawer Sizes

Number	Width (inches)	Depth (inches)	Height (inches)
1	23	16	2
2	23	16	3
1	23	16	4 1/4
1	23	16	6 7/16
1	23	16	8 1/2

Features

- Frame is reinforced using 14 gauge plates on the front of cabinet
- Rigidity of frame is significantly increased with full height & width triple channel wall
- Three layers of metal guard the corners with interlock corner design
- TWO pairs of 120 lb. rated ball bearing drawer slides on all drawers except 2" drawers
- 6"x2" precision ball bearing casters made of high tech thermoplastic rubber .
- Casters absorb vibrations transmitted to frame while moving on uneven surfaces
- Casters equipped with pedal brake and ball bearings for easy operation
- All drawers equipped with safe-lock system & made of 18 gauge heavy duty steel
- Extruded aluminum drawer handle trim
- Red high gloss powder coat paint is scratch resistant
- Drawer liners included at no extra charge
- Gas struts in lid of chest make lid easy to open and close

WILLIAMS

COMMERCIAL SERIES 53" TOOL CABINETS

Designed for use in commercial applications.
Equipped with quadra level ball bearing drawer slides.

Product Code	Description
50861	53" 9-Drawer Heavy DutyRoller Bearing Top Chest
50891	53" 14-Drawer Heavy Duty RollerBearing Roll Cabinet

50861 Top Chest Overall Dimensions

Capacity (cu. in.)	Width (inches)	Depth (inches)	Height (inches)
13542	52 17/32	17 7/8	22 1/4

Top Chest Drawer Sizes

Number	Width (inches)	Depth (inches)	Height (inches)
5	23	16	2
3	23	16	4 1/4
1	23	16	6 7/16

50891 Roll Cabinet Overall Dimensions

Capacity (cu. in.)	Width (inches)	Depth (inches)	Height (inches)
21000	53 17/32	18 3/4	42 3/8

Roll Cabinet Drawer Sizes

Number	Width (inches)	Depth (inches)	Height (inches)
4	23	16	2
7	23	16	4 1/4
2	23	16	6 7/16
1	23	16	8 1/2

50850 Locker Overall Dimensions

Capacity (cu. in.)	Width (inches)	Depth (inches)	Height (inches)
12,258	17 3/4	18 3/4	56 15/16

Features

- Frame is reinforced for rigidity using 14 gauge channel on bottom.
- High gloss powder coat paint is scratch & chemical resistant.
- Stronghold drawer detents help keep drawers shut.
- Heavy gauge metal for a lifetime of use.
- Double wall construction for greater strength and durability.
- Heavy duty 5" x 2" casters on cabinets.
- Drawer liners included at no extra charge.
- Gas struts in lid for easy and safe opening.
- Ball bearing drawer slides for smooth drawer operation.

50861

50891

50850

Color Options

Red: Standard
Black: B
Blue: BL

50865

50855

50895

50865BL
50895BL
50855BL

50865B
50895B
50855B

50851

WILLIAMS®

COMMERCIAL SERIES 42" TOOL CABINETS

Designed for commercial applications. Equipped with quadra level ball bearing drawer slides.

Product Code	Description
50865	42" 7-Drawer Heavy Duty Roller Bearing Top Chest
50895	42" 15-Drawer Heavy Duty Roller Bearing Roll Cabinet
50855	37" 1-Shelf Heavy Duty Tall Side Cabinet

Color Options: Standard color is red. To order in an optional color, simply add the appropriate color code to the end of the product code. Example: To order #50865 in Blue, specify product code 50865BL

50865 Top Chest Overall Dimensions

Capacity (cu. in.)	Width (inches)	Depth (inches)	Height (inches)
9205	40 ½	17 ⅞	20 ½

Top Chest Drawer Sizes

Number	Width (inches)	Depth (inches)	Height (inches)
1	38	16	4 ¼
2	23	16	2
2	11	16	2
1	23	16	4 ¼
1	11	16	4¼

50895 Roll Cabinet Overall Dimensions

Capacity (cu. in.)	Width (inches)	Depth (inches)	Height (inches)
14623	41 ½	18 ¾	42 ⅜

Roll Cabinet Drawer Sizes

Number	Width (inches)	Depth (inches)	Height (inches)
1	38	16	4 ¼
4	23	16	2
2	23	16	4 ¼
1	23	16	6 7/16
4	11	16	2
2	11	16	4 ¼
1	11	16	6 7/16

Features

- Frame is reinforced for rigidity using 14 gauge channel on bottom.
- High gloss powder coat paint is scratch & chemical resistant.
- Stronghold drawer detents help keep drawers shut.
- Heavy gauge metal for a lifetime of use.
- Double wall construction for greater strength and durability.
- Heavy duty 5" x 2" casters on cabinets.
- Gas struts in lid for easy and safe opening.
- Ball bearing drawer slides for smooth drawer operation.
- Drawer liners included at no extra charge.

50855 Side Cabinet Overall Dimensions

Capacity (cu. in.)	Width (inches)	Depth (inches)	Height (inches)
8200	15	18 ¾	37 1/16

50851 Side Cabinet Overall Dimensions

Capacity (cu. in.)	Width (inches)	Depth (inches)	Height (inches)
3,921	15	18 ¾	30 ½

Features

- High gloss powder coat paint is scratch & chemical resistant.
- Heavy gauge metal for a lifetime of use.
- Adjustable shelf for versatile tool storage options.
- Can be used on all Williams Commercial Series roll cabinets.
- 50851 - 7-Drawer side cabinet - red only
- 50855 - Side cabinet with 1 shelf

WILLIAMS

COMMERCIAL SERIES 42" TOOL CABINETS

Product Code	Description
50868	42" 9-Drawer Commercial Top Chest
50898	42" 13-Drawer Commercial Roll Cabinet

Color Options: Standard color is red. To order in an optional color, simply add the appropriatecolor code to the end of the product code. Example: To order #50865 in Blue, specify product code 50865BL

50868 Top Chest Overall Dimensions

Capacity (cu. in.)	Width (inches)	Depth (inches)	Height (inches)
13,090	41 ½	23	21 ⅛

Top Chest Drawer Sizes

Number	Width	Depth	Height
3	23	22	2
2	11	22	2
2	23	22	4 ¼
1	11	22	4 ¼
1	11	22	6 7/16

50898 Roll Cabinet Overall Dimensions

Capacity (cu. in.)	Width (inches)	Depth (inches)	Height (inches)
19,938	41 ½	24 ⅜	43 ⅝

Roll Cabinet Drawer Sizes

Number	Width	Depth	Height
4	23	22	2
3	11	22	2
2	23	22	4 ¼
1	11	22	4 ¼
1	23	22	6 7/16
1	11	22	13
1	38	22	4 ¼

Features

- 42" Top Chest equipped with ball bearing drawer slides for smooth drawer operations.

Color Options

Red: Standard
Black: B
Blue: BL

WILLIAMS

COMMERCIAL SERIES 34" TOOL CABINETS

Product Code	Description
50867	34" 10-Drawer Heavy Duty Top Chest
50897	34" 8-Drawer Heavy Duty Roller Bearing Roll Cabinet

50867 Top Chest Overall Dimensions

Capacity (cu. in.)	Width (inches)	Depth (inches)	Height (inches)
8845	34	17 ⅞	20 ½

Top Chest Drawer Sizes

Number	Width	Depth	Height
6	11	16	2
1	7	16	6 7/16
2	31	16	2
1	31	16	4 ¼

50897 Roll Cabinet Overall Dimensions

Capacity (cu. in.)	Width (inches)	Depth (inches)	Height (inches)
14292	35	18 ¾	42 ⅜

Roll Cabinet Drawer Sizes

Number	Width (inches)	Depth (inches)	Height (inches)
4	31	16	2
3	31	16	4 ¼
1	31	16	8 ½

Features

- 34" Top chest's 7 small drawers equipped with friction slides and 3 bottom drawers equipped with ball bearing drawer slides.
- Roll cab frames are reinforced for rigidity using 14 gauge channel on bottom.
- High gloss powder coat paint is scratch & chemical resistant.
- Stronghold drawer detents help keep drawers shut.
- Heavy gauge metal for a lifetime of use.
- Double wall construction for greater strength and durability.
- Heavy duty 5" x 2" casters on cabinets.
- Wide drawers are ideal for storing torque wrenches, prybars, etc.
- Drawer liners included at no extra charge.
- Roll cabinets equipped with ball bearing drawer slides for smooth operation.

WILLIAMS

COMMERCIAL SERIES 27" TOOL CABINETS

Designed for commercial applications. Equipped with quadra level ball bearing drawer slides.

Product Code	Description
50871	27" 10-Drawer Heavy Duty Top Chest
50901	27" 8-Drawer Heavy Duty Roller Bearing Roll Cabinet

50871 Top Chest Overall Dimensions

Capacity (cu. in.)	Width (inches)	Depth (inches)	Height (inches)
6571	26	17 7/8	20 1/2

Top Chest Drawer Sizes

Number	Width (inches)	Depth (inches)	Height (inches)
1	23	16	4 1/4
2	23	16	2
6	7	16	2
1	7	16	6 7/16

50901 Roll Cabinet Overall Dimensions

Capacity (cu. in.)	Width (inches)	Depth (inches)	Height (inches)
10560	27	18 3/4	42 3/8

Roll Cabinet Drawer Sizes

Number	Width (inches)	Depth (inches)	Height (inches)
1	23	16	8 1/2
3	23	16	4 1/4
4	23	16	2

Features

- Frame is reinforced for rigidity using 14 gauge channel on bottom.
- High gloss powder coat paint is scratch & chemical resistant.
- Stronghold drawer detents help keep drawers shut.
- Heavy gauge metal for a lifetime of use.
- Double wall construction for greater strength and durability.
- Heavy duty 5" x 2" casters on cabinets.
- Drawer liners included at no extra charge.
- Roll Cabinet equipped with ball bearing drawer slides for smooth drawer operation.
- Top chest's 7 small drawers equipped with friction slides and 3 bottom drawers equipped with ball bearing drawer slides.

WARNING

- Do not open more than one loaded drawer at a time.
- Close lid and lock drawers and doors before moving.
- Apply brakes on locking casters when not moving unit.
- Do not step in or on drawers.
- Secure units together with fasteners.

- Read and follow instruction manual.
- Do not pull; push to move.
- Wear gloves when lifting by edges.
- Keep feet and fingers clear of edges when stacking, hanging or moving units.

WILLIAMS

SUPER VALUE SERIES 56" TOOL CABINETS

Super Value units equipped with ball bearing slides designed for professional use at a value price.

Product Code	Description
50740	56" Wide x 24" Deep Super Value Top Chest
50765	56" Wide x 24" Deep Super Value Roll Cabinet

Color Options: Standard color is red. To order in an optional color, simply add the appropriate color code to the end of the product code. Example: To order #50865 in Blue, specify product code 50865BL

50740 Top Chest Overall Dimensions

Capacity (cu. in.)	Width (inches)	Depth (inches)	Height (inches)
12,763	55 1/2	24	10 1/10

Top Chest Drawer Sizes

Number	Width (inches)	Depth (inches)	Height (inches)
2	33 5/8	22	1 11/32
2	33 5/8	22	3 1/2
1	16 1/2	22	3 1/2
1	16 1/2	22	8

50765 Roll Cabinet Overall Dimensions

Capacity (cu. in.)	Width (inches)	Depth (inches)	Height (inches)
21,866	56 1/2	24	39 1/2

Roll Cabinet Drawer Sizes

Number	Width	Depth	Height
1	51 7/8	22	4 3/16
2	33 5/8	22	3 3/32
3	33 5/8	22	4 3/16
3	16 1/2	22	2
1	16 1/2	22	12

50790 Full Locker Overall Dimensions

Capacity (cu. in.)	Width (inches)	Depth (inches)	Height (inches)
35,640	15	24	51

Features

- Ball bearing slides on all drawers
- Double wall steel construction
- High gloss power coat scratch resistant paint
- Extruded aluminum drawer handle trim
- Comes with pre-cut drawer liners
- Gas struts in the lid for ease in opening and closing the lid

Color Options

Red: Standard
Black: B
Blue: BL
Orange: O

50740

50765

WILLIAMS

SUPER VALUE SERIES ONE PIECE UNIT

Super Value units equipped with ball bearing slides designed for professional use at a value price.

Product Code	Description
50730	42" Wide x 18 3/4" Deep Super Value One Piece Unit

50730 One Piece Unit Overall Dimensions

Capacity (cu. in.)	Width (inches)	Depth (inches)	Height (inches)
8,503	41 1/2	18 3/4	61 5/16

Top Chest Drawer Sizes

Number	Width (inches)	Depth (inches)	Height (inches)
1	38	16	4 3/16
5	23	16	2
3	23	16	3 3/32
2	23	16	4 3/16
5	11	16	2
3	11	16	3 3/32
1	11	16	8 5/8

Features

- The Unit includes 20 drawers with a pull out work surface
- 9-1/2" canopy in top for holding large tools & other materials
- Canopy has electrical knockouts so cordless tool charger's can be kept secure
- Gas struts help to easily open the lid
- Ball bearing slides
- 5" x 2" Heavy duty casters
- Includes pre-cut drawer liners
- Red only

50730

50741

50791

50742

WILLIAMS

SUPER VALUE SERIES 42" TOOL CABINETS

Super Heavy Duty roll cabinet designed for the toughest work environments

Product Code	Description
50741	35" Wide x 18" Deep Super Value Top Chest
50766	35" Wide x 18" Deep Super Value Roll Cabinet

50741 Top Chest Overall Dimensions

Capacity (cu. in.)	Width (inches)	Depth (inches)	Height (inches)
6,387	40 7/8	16	10 1/4

Top Chest Drawer Sizes

Number	Width (inches)	Depth (inches)	Height (inches)
3	23	16	2
3	23	16	3 3/32
2	12	16	2
2	12	16	3 3/32

50791 Full Locker Overall Dimensions

Capacity (cu. in.)	Width (inches)	Depth (inches)	Height (inches)
13,700	15 3/8	18 1/4	52

50792 Half Locker Overall Dimensions

Capacity (cu. in.)	Width (inches)	Depth (inches)	Height (inches)
8,668	14	18	33 1/2

50766 Roll Cabinet Overall Dimensions

Capacity (cu. in.)	Width (inches)	Depth (inches)	Height (inches)
8,606	41 1/2	18	39 7/8

Roll Cabinet Drawer Sizes

Number	Width (inches)	Depth (inches)	Height (inches)
1	38	16	4 3/16
1	23	16	2
4	23	16	3 3/32
1	23	16	4 3/16
2	11	16	3 3/32
1	11	16	4 3/16
1	11	16	8 5/8

WILLIAMS

SUPER VALUE SERIES 27" TOOL CABINETS

Super Heavy Duty roll cabinet designed for the toughest work environments

Product Code	Description
50742	27" Wide x 12" Deep Super Value Top Chest - 4 Drawers
50743	27" Wide x 18" Deep Super Value Top Chest - 6 Drawers
50767	27" Wide x 18" Deep Super Value Roll Cabinet - 5 Drawers
50768	27" Wide x 18" Deep Super Value Roll Cabinet - 7 Drawers

50742 Top Chest Overall Dimensions

Capacity (cu. in.)	Width (inches)	Depth (inches)	Height (inches)
3050	26	12	14 1/2

50742 Top Chest Drawer Sizes

Number	Width (inches)	Depth (inches)	Height (inches)
3	23	10 1/2	2
1	23	10 1/2	2 1/2

50743 Top Chest Overall Dimensions

Capacity (cu. in.)	Width (inches)	Depth (inches)	Height (inches)
4806	26	17 7/8	18 15/16

50743 Top Chest Drawer Sizes

Number	Width (inches)	Depth (inches)	Height (inches)
6	23	16	2

50767 Roll Cabinet Overall Dimensions

Capacity (cu. in.)	Width (inches)	Depth (inches)	Height (inches)
5,193	27	18 3/4	31 1/2

Roll Cabinet Drawer Sizes

Number	Width (inches)	Depth (inches)	Height (inches)
1	23	16	2
4	23	16	4 1/4

50768 Roll Cabinet Overall Dimensions

Capacity (cu. in.)	Width (inches)	Depth (inches)	Height (inches)
8,223	27	18 3/4	35 1/2

Roll Cabinet Drawer Sizes

Number	Width (inches)	Depth (inches)	Height (inches)
4	23	16	2
2	23	16	4 1/4
1	23	16	6 7/16

Features

- Ball bearing slides on all drawers
- Double wall steel construction
- High gloss power coat scratch resistant paint
- Extruded aluminum drawer handle trim.
- Comes with pre-cut drawer liners
- Gas struts in the lid of the 42" wide chest for ease in opening and closing the lid

WILLIAMS

SUPER VALUE SERIES 26" CHEST

Product Code	Description
TB-6024RA	26" 6-Drawer Top Chest with Drop Front

TB-6024RA Top Chest, Overall Dimensions

Capacity (cu. in.)	Width (inches)	Depth (inches)	Height (inches)
3.073	26	12	14 ½

Top Chests, Drawer Sizes

Number	Width (inches)	Depth (inches)	Height (inches)
3	23	10 ½	2
3	7	10 ½	2

Features

- Heavy bottom support rails.
- High gloss powder coat paint is scratch & chemical resistant.
- Heavy gauge metal for a lifetime of use.
- Double wall construction for greater strength.
- Standard compound friction slides.
- TB-6024A pictured with optional tote tray.

TB-6024RA
Pictured with optional tote tray

WILLIAMS

SERVICE CARTS

Easy and convenient access to tools when and where you need them.

Product Code	Description
50721	3-Drawer Service Cart with Lockable Lid - Black Only
50725	1-Drawer Service Cart with Tray - Red Only

Service Cart Overall Dimensions

Product Code	Width (inches)	Depth (inches)	Height (inches)
50721	30	19 ½	34 ½
50725	30	16 ½	36

Features

- High gloss powder coat paint is scratch & chemical resistant
- Storage drawers for frequently used tools
- Heavy duty undercarriage to help support bottom tray load
- 18 gauge heavy duty steel
- 4" x 1" swivel casters

50721

50725

50946B

WILLIAMS

HEAVY-DUTY ROAD BOX

Designed with extra heavy-duty features for mobile use in the factory or on the road in service trucks. Available in black only.

Product Code	Description
50946B	26" 5-Drawer Heavy Duty Road Box / Top Chest
50947B	34" 5-Drawer Heavy Duty Road Box / Top Chest

50946B Road Box Overall Dimensions

Capacity (cu. in.)	Width (inches)	Depth (inches)	Height(inches)
6749	26	17 7/8	22

50946B Road Box Drawer Sizes

Number	Width (inches)	Depth (inches)	Height (inches)
2	23	16	4 1/4
3	23	16	2

50947B Road Box Overall Dimensions

Capacity (cu. in.)	Width (inches)	Depth (inches)	Height (inches)
8882	34	17 7/8	23

50947B Road Box Drawer Sizes

Number	Width (inches)	Depth (inches)	Height (inches)
3	31	16	2
2	31	16	4 1/2

Features

- Drop front panel has neoprene water & dust resistant seal.
- Shielded hinges for long life in harsh environments.
- Cushion feet pads attached to bottom for protection.
- Extra heavy duty metal with 75 lb load rating per drawer.
- Secure key internal locking system.

50950

WILLIAMS

JOB SITE BOXES

Designed for the toughest outdoor work environments

Product Code	Description
50950	32" Wide x 19" Deep x 17 1/2" High
50951	42" Wide x 20" Deep x 23 1/2" High
50952	48" Wide x 24" Deep x 27 1/2" High
50953	48" Wide x 30" Deep x 33 1/2" High
50954	48" Wide x 24" Deep x 28 3/8" High
50949	6" x 2" Swivel Caster Set

Features

- Casters weight capacity is 3500 lbs
- Tough industrial powder coating finish
- Heavy 16 gauge steel construction
- Recessed and concealed locking area protects padlock for ultimate security against drills and bolt cutter
- Fully welded seams provide maximum strength
- Recessed side handles for easy transportation
- Reinforced overlapping lid provides protection from weather and forced entry
- Heavy duty industrial lid stays prevents accidental closure
- Tread plate design for rugged durability
- 50954 available in black only, all others are blue

WILLIAMS

WORK BENCH

Heavy duty steel construction

Product Code	Description
50921	72" Professional Workbench
50920	72" Professional Workbench with Pegboard
50922	60" Professional Workbench
50923	48" Professional Workbench
50924	36" Professional Workbench

Features

- Heavy duty steel construction
- High gloss powder coat scratch resistant paint
- Back and side roll-off panel prevents tools and hardware from rolling off the bench

50923

50920

WILLIAMS

26" FLAT TOP TOOLBOX

Product Code	Width (Inches)	Depth (Inches)	Height (Inches)	Cubic Inch Capacity
TB-6124A	26	8 ¾	9	1980

- Ruggedly constructed hand tool box.
- Extra long tools up to 25" fit neatly inside.
- Three compartment tray with socket divider to keep small tools better organized and close at hand.
- Double drawbolts keep the lid tightly closed.
- Padlock eye with slotted hasp provides security.

TB-6124A

WILLIAMS

21" FLAT TOP TOOLBOX

Product Code	Width (Inches)	Depth (Inches)	Height (Inches)	Cubic Inch Capacity
TB-6121	21 ¼	8 ¾	12	1613

- Ruggedly constructed hand lool box
- Three compartment tray with socket divider to keep small tools better organized and close al hand.
- Double drawbolts keep the lid lightly closed.
- Padlock eye with slotted hasp provides security

TB-6121

WILLIAMS

21" FLAT TOP TOOLBOX

Product Code	Width (Inches)	Depth (Inches)	Height (Inches)	Cubic Inch Capacity
TB-6123	21	8 ¾	12	1606

- Ideal lor general use
- Steel tote tray keeps smaller Items handy
- Combination drawbolt and padlock eye provide security

TB-6123

TB-6218A

WILLIAMS

21" FOUR TRAY CANTILEVER TOOLBOX

Product Code	Width (Inches)	Depth (Inches)	Height (Inches)	Cubic Inch Capacity
TB-6218A	21 1/4	8 3/4	12	1971

- Four trays cantilever outward when box is open providing access to the exceptionally deep box.
- Two of the trays feature movable dividers and another has a protective cover to prevent small tools or parts from spilling into the box.
- Formed feet in the box bottom add to strength and keep the box away from wet, dirty surfaces.

TB-6220A

WILLIAMS

20" HIP ROOF TOOLBOX

Product Code	Width (Inches)	Depth (Inches)	Height (Inches)	Cubic Inch Capacity
TB-6220A	20	7	8	959

- Hip roof design for fitting bulky tools.
- Ideal for tradesman who carries bulky drills or 3/4 inch drive sets.
- Extra large tote tray with deeper space between handle and tray bottom.
- Combination drawbolt and padlock eye provide security.

TB-6119A

WILLIAMS

19" FLAT TOP TOOLBOX

Product Code	Width (Inches)	Depth (Inches)	Height (Inches)	Cubic Inch Capacity
TB-6119A	19	6	6 1/2	741

- Ideal lor general use.
- Steel tote tray keeps smaller Items handy.
- Combination drawbolt and padlock eye provide security.

TB-6116

WILLIAMS

16" FLAT TOP TOOLBOX WITH TRAY

Product Code	Width (Inches)	Depth (Inches)	Height (Inches)	Cubic Inch Capacity
TB-6116	16	6	6 1/2	574

- Ruggedly constructed hand lool box
- Three compartment tray with socket divider to keep small tools better organized and close al hand.
- Double drawbolts keep the lid lightly closed.
- Padlock eye with slotted hasp provides security

20"/26" FLAT TOP PLASTIC TOOLBOXES

Product Code	Width (Inches)	Depth (Inches)	Height (Inches)
PTB2025102	20	11	12
PTB2026602	26	11	12

Features
- Composite virgin polypropylene
- Rounded corners for increased resistance to impact
- Portable tote tray
- ABS and brass closures
- Padlock option
- Non-slip handle

Tools not included

PTB2025102

23" FLAT TOP PLASTIC TOOLBOX WITH CLEAR TRAY

Product Code	Width (Inches)	Depth (Inches)	Height (Inches)
PTB253580	23	13 ½	12

Features
- Composite virgin polypropylene
- Adjustable shoulder strap
- Cover with 4 to 12 modular compartments
- Practical designed to carry tool box over shoulder
- Padlock option
- Non-slip handle

Tools not included

PTB253580

17" FLAT TOP PLASTIC TOOLBOX WITH 3 DRAWERS

Product Code	Width (Inches)	Depth (Inches)	Height (Inches)
PTB303440	17 5/16	10	13 ½

Features
- Composite virgin polypropylene
- Upper compartment for tools
- Drawers for smaller tools and accessories
- Secure latch door
- Stainless steel closures
- 16 to 32 modular compartments
- Padlock option
- Non-slip handle

Tools not included

PTB303440

METAL SOCKET SET TOOLBOXES

Rugged storage for Williams' premium socket sets

Product Code	Length (Inches)	Width (Inches)	Height (Inches)
TB-101	10	7	1 ½
TB-102	13	9	1 ¾
TB-103	18	8	2
TB-104	25	9	2
TB-12	30 ¼	11 ½	4 ¾
TB-35	14 ½	5 ½	1 ¾
TB-49	24 ⅞	8 ⅛	3 ⅞

Features
- Ruggedly constructed for long life.
- Ideal for storing socket sets, other tools, and small parts.

Made in U.S.A.

TB-103

JHW TOTE BAG

WILLIAMS®

TOOL TOTE BAGS

Product Code	Length (Inches)	Width (Inches)	Height (Inches)
JHW TOTE BAG	14	11	10

Features

- Constructed from heavy Cordura® for maximum durability.
- Ideal for storing and toting tools, parts, and supplies.
- Heavy duty zippers for extra long life.

R-9

WILLIAMS®

METAL SOCKET RAILS AND CLIPS

Product Code	Description	Material	Length (Inches)
R-9	Socket Rail	Metal	9
R-13R	Socket Rail	Metal	13
R-17	Socket Rail	Metal	17

Product Code	Description	Material	Drive Size (Inches)
RC-25	Socket Clip	Metal	¼
RC-37	Socket Clip	Metal	⅜
RC-50	Socket Clip	Metal	½
RC-75	Socket Clip	Metal	¾

* Socket clips sold individually
* All rails hold any size clips

Made in U.S.A.

RC-37-15P

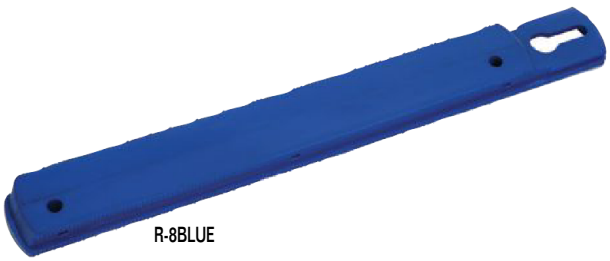

R-8BLUE

WILLIAMS®

PLASTIC SOCKET RAILS AND CLIPS

Product Code	Description	Material	Length (Inches)
R-8BLUE	Socket Rail - Blue	Plastic	8
R-8RED	Socket Rail - Red	Plastic	8
R-13BLUE	Socket Rail - Blue	Plastic	13
R-13RED	Socket Rail - Red	Plastic	13
R-18BLUE	Socket Rail - Blue	Plastic	18
R-18RED	Socket Rail - Red	Plastic	18

Product Code	Description	Package Quantity	Drive Size (Inches)
RC-25-15P	Socket Clip	15 Pack	¼
RC-37-15P	Socket Clip	15 Pack	⅜
RC-50-15P	Socket Clip	15 Pack	½

* Socket clips sold individually
* All rails hold any size clips

Made in U.S.A.

WILLIAMS®

ROLL POUCHES

Customize Your Own Tool Sets

Product Code	Number of Pockets	Width (Inches)	Height (Inches)
R-1	5	6	7 ½
R-2	5	8	12
R-3	5	11 ½	15 ½
R-4	5	12 ½	18 ½
R-5	5	16	25
R-8	15	17 ¼	10 ½
R-10	10	19 ¾	17 ¼
R-11	10	26 ½	25
R-13	10	34 ½	32
R-14	14	20 ¼	9 ¾
R-15	8	15 ¼	16 ¾
R-20	14	14 ½	8
R-23	8	23 ¼	26
R-24	4	8 ¾	11
R-27	17	23 ¼	17 ¾
R-28	26	19 ½	27
R-29	8	11	12 ¾
R-30	9	14 ⅝	13
R-30X	9	14 ¾	8 ½
R-31	6	13 ¼	16
R-36	9	9 ¼	10 ½
R-37	15	37	26 ½
R-38	7	13	16 ¾
R-41	11	24	20
R-42	7	12 ¾	16
R-43	7	13	16 ½
R-47	7	12 ¾	14 ½
R-48	3	15 ¼	9 ¼
R-49	12	25 ⅝	29

Features

- Heavy construction for long life.
- Ideal for storing a variety of tools such as wrenches, extensions, and ratchets.

R-4

WILLIAMS®

VINYL POUCHES

Customize Your Own Tool Sets

Product Code	Width (Inches)	Height (Inches)
50001	4 ½	12 ½
50003	6	15
50005	7 ½	19
50007	9 ½	19
097411	6	⅜
099965	9 ½	⅛

Features

- Extra heavy construction with snap fastening
- Clear plastic front panels allows full visibility to tools
- Metal grommets allow pouch to be hung on pegboard

R-3

Torque Tools

Torque Tools

Torque Tools

No one manufactures and sells more professional-grade torque products. We are the world's largest supplier of industrial quality torque tools, and a respected leader in precision torque, force and tension calibration systems. CDI is ISO 9001 certified and a pioneer in the development of digital torque measuring instruments. So whether it's torque wrenches and drivers or torque testing and calibration equipment, all meet the most exacting standards.

CDI Torque Products: torque without compromise.

Digital Torque Tester™ (DTT)

- Designed to be an affordable torque tester
- Can be mounted on a wall or used in a bench-top vise
- Features an easy to use touch pad screen to capture peak torque value during a test in real time, and download stored torque data to a PC.
- All DTT torque testers are sold in a kit with the complete tester, hard carrying case, a socket driver reducer adapter and AC/DC power supply.

Torque & Angle™ Electronic Torque Wrenches

- Incorporates 21st Century Technology in a simple to use digital wrench.
- Features three units of torque, ft.lbs. In.lbs. and Nm as well as the angle mode.
- Constructed with a three LED light bar and audible buzzer showing the proper torque.

Metal Handle Click Type Torque Wrenches

- A rugged, industrial strength torque wrench able to withstand the rigors of professional use.
- Handles are lightly knurled for a tough, non-slip grip.
- 21 models of metal handle micrometer adjustable torque wrenches available.

The CDI brand is respected as one of America's largest manufacturers of Torque Testers, Calibration Equipment, Electronic and Mechanical Torque Tools.

Calibration Systems & Accessories
- Laboratory grade instruments
- Captures torque measurements with a user friendly interface.
- LCD graphical display
- 7 systems available or build you own custom system

Heavy-Duty Torque & Angle™ Torque Wrench
- 600 ft.lb. Heavy-Duty Torque & Angle™ Torque Wrench eliminates the need for angle gauges and protractors, providing the most accurate and efficient way to achieve torque plus angle tightening sequences now specified by many manufacturers.
- Digital readout displays a torque setting then with a push of a button, switches to the angle mode.
- Angle readout not affected by ratcheting.
- Angle calculation based on the same gyroscopic technology that maintains helicopters at level flight.

Electronic Torque Tools
- 21st century torque thinking
- State of the art technology
- 100% solid state electronic design
- Fewer components
- No moving parts (except ratchet)
- Technician Friendly - Simple set up
- Audible alarm if over-torqued

Mechanical Torque Tools
- Legacy Technology at its best.
- Familiarity of operation
- High quality components
- Accuracy, ±4% of indicated value
- Proper maintenance can provide years of service
- Impulse click signals user when peak value is reached
- Split Beam style can be stored at any torque setting

CDI TORQUE PRODUCTS

MULTITEST CALIBRATION SYSTEMS

The **MULTITEST Torque, Force and Tension Calibration System** is the most sophisticated system available in the industry. This system will test and calibrate most types of torque wrenches, torque screwdrivers, torque multipliers, cable tensiometers, tension and compression gauges and non-impact power tools such as nutrunners and electric screwdrivers.

The Multitest Calibration System can be ordered several ways. Each system begins with the same three basic components: the Multitest Digital Monitor, the Roller Cabinet and the 2000 ft. lb. Mechanical Loader. We offer three different systems, the "Premier", the "Supreme" and the "Basic". These systems and their components are described in detail on the next few pages.

In addition, you may order any component separately to build your own "custom" system.

Features

- Automatic sensor recognition with "smart" transducers
- Range: 5 in. oz. to 2000 ft. lb. torque (bi-directional)
- Accuracy: ± 0.25% of indicated value, cw & ccw, from 10% to 100% of full scale, (except 2000-4-02*)
- Built-in, low profile serial printer
- Date and time stamp for stored values
- Statistical analysis performed on stored data
- Stores up to 3000 torque values
- Programmable manual or automatic options for clear, store and print functions
- 110 or 220 Volts selectable. Foreign plugs are included
- Recall and review of stored torque values
- Track, peak, first peak, power tool modes
- RS232C port, analog output
- Eight torque measurement units: in. oz., in. lb., ft. lb., Nm, dNm, cNm, mkg and cmkg
- Six force units: ounce, pound, newton, deciNewton, kilopound (kilogram) and gram
- Automatic lock-up for transducer protection
- All transducers supplied with certification
- Individually serialized with matching certificate of calibration traceable to N.I.S.T.

USA Made in U.S.A.

Multitest Digital Monitor with Soft Touch Keys.

CDI TORQUE PRODUCTS

MULTITEST PREMIER CALIBRATION SYSTEM

CDI's All Inclusive Calibration System Model 2000-1

Features

- Our most comprehensive calibration system for torque and force
- Calibrate torque wrenches up to 2000 ft. lbs.
- Check the accuracy and calibrate cable tensiometers, tension and compression gauges
- Includes the easy-to-use 4-in-1 transducer kit
- Eleven single transducers ranging from 5 in. oz. up to 2000 ft. lbs.
- Includes torque screwdriver testing kit
- Automatic safety feature locks system to prevent overloading and possible damage to transducers
- Displays eight units of torque and six units of force
- Also includes a calibration stand and all necessary calibration wheels, arms, weights and trays
- Downloading software included

MODEL 2000-1 INCLUDES:

Product Code	Description
2000-610-02	MULTITEST Monitor
2000-600-02	Mechanical Loader 2000 ft. lb. capacity
2000-100-02	Roller Cabinet
2000-400-02	4 in 1 Transducer Kit, 4 in. lbs. to 250 ft. lbs.
2000-500-02	4 In 1 Transducer Adapter Kit
2000-4-02*	Transducer Range From 5 - 50 in. ozs. (*± 0.5%)
2000-5-02	Transducer Range From 15 - 200 in. ozs.
2000-6-02	Transducer Range From 4 - 50 in. lbs.
2000-65-02	Transducer Range From 15 - 150 in. lbs.
2000-7-02	Transducer Range From 30 - 400 in. lbs.
2000-8-02	Transducer Range From 80 - 1000 in. lbs.
2000-10-02	Transducer Range From 10 - 125 ft. lbs.
2000-11-02	Transducer Range From 20 - 250 ft. lbs.
2000-12-02	Transducer Range From 60 - 600 ft. lbs.
2000-13-02	Transducer Range From 100 - 1000 ft. lbs.
2000-14-02	Transducer Range From 200 - 2000 ft. lbs.
900-0-1KIT	Joint Rate Simulator 50 in. lbs. capacity
900-2-01KIT	Joint Rate Simulator 400 in. lbs. capacity
900-3-01KIT	Joint Rate Simulator 1000 in. lbs. capacity

Product Code	Description
2000-550-02	Extension Arm Kit for Long Torque Wrenches
2000-750-02	Torque Screwdriver Testing Kit
2000-320-0	No. 1 Weight Set
2500-50-0	2-1/2" Calibration Wheel
2000-151-0	5" Calibration Wheel
2000-152-0	10" Butterfly Wheel
2000-154-0	40" Calibration Arm
390-2-2	4 oz. Weight Hanger
2000-301	8 oz. Weight Hanger
2000-304-0	7.5 lb. Weight Hanger
2000-302-0	15 lb. Weight Hanger
2000-303-0	50 lb. Weight Hanger
2000-250-02	Calibration Stand Kit
2000-260-0	Tensiometer Testing Kit
2000-261-0	Tension Gauge Testing Kit
2000-262-0	Compression Gauge Testing Kit
2000-263-02	Force Arm Kit
2000-SW	PC Software
2000-50-1	Cable from MULTITEST to PC

USA Made in U.S.A.

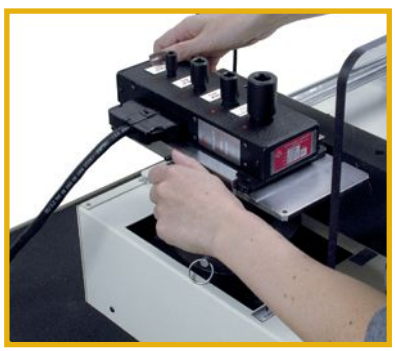

4 in 1 Transducer Kit with Mounting Adapter

CDI TORQUE PRODUCTS

MULTITEST SUPREME CALIBRATION SYSTEM

CDI's Torque-Only System Model 2000-2. Listed below are all of the components to CDI's "Supreme" MULTITEST Torque Calibration System. This is our mid-range system for torque, which has a range from 15 in. ozs. to 2000 ft. lbs. Designed for the user who requires precision accuracy and reliability in a torque calibration system. This set includes an extension arm for long torque wrenches and 3 joint rate simulators for testing power tools. (Not for use with impact and pulse tools.) PC compatible software and cables are also included.

MODEL 2000-2 INCLUDES:

Product Code	Description
2000-610-02	Multitest Digital Monitor
2000-600-02	Mechanical Loader Max 2000 ft.lb.
2000-100-02	Roller / Storage Cabinet 45" W x 24" D x 33" H
2000-400-02	4 in 1 Transducer Kit-Range 4 in. lb. to 250 ft. lb.
2000-500-02	4 in 1 Transducer Adapter Kit
2000-4-02	Transducer Kit-Range 5-50 in. oz.
2000-5-02	Transducer Kit-Range 15-200 in. oz.
2000-12-02	Transducer Kit-Range 60-600 ft. lb.
2000-13-02	Transducer Kit-Range 100-1000 ft. lb.
2000-14-02	Transducer Kit-Range 200-2000 ft. lb.
2000-550-02	Extension Arm for Long Torque Wrench, Reach up to 80"
900-0-1KIT	1/4" drive, 50 in. lb. Capacity Joint Rate Simulator
900-2-01KIT	3/8" drive, 400 in. lb. Capacity Joint Rate Simulator
900-3-01KIT	3/8" drive, 1000 in. lb. Capacity Joint Rate Simulator
2000-SW	Wedgelink Software
2000-50-1	Cable from MULTITEST or SURETEST to PC

Made in U.S.A.

4 in 1 Transducer Kit with Mounting Adapter.

CDI TORQUE PRODUCTS

MULTITEST BASIC CALIBRATION SYSTEM

Listed below are all of the components to CDI's "Basic" MULTITEST Calibration System Model 2000-3. The system includes the 4 in 1 transducer, which is capable of calibrating torque tools from 4 in. lbs. through 250 ft. lbs. Also included is the 2000 ft. lb. loader and the MULTITEST monitor.

MODEL 2000-3 INCLUDES:

Product Code	Description
2000-610-02	Multitest Digital Monitor
2000-600-02	Mechanical Loader Max 2000 ft.lb.
2000-100-02	Roller / Storage Cabinet 45" W x 24" D x 33" H
2000-400-02	4 in 1 Transducer Kit-Range 4 in. lb. to 250 ft. lb.
2000-500-02	4 in 1 Transducer Adapter Kit

Made in U.S.A.

CDI TORQUE PRODUCTS

MULTITEST MOTORIZED SYSTEM

CDI has taken torque calibration to a higher level. Increase your productivity with the 2000 ft. lb. fully automatic motorized loader. Designed for the high volume calibration laboratory that requires a high-speed, automatic torque calibration system. In the automatic mode, the **MULTITEST Motorized System Model 2800-1** will cycle, test and calibrate most torque wrenches. With our optional kits, you can calibrate torque screwdrivers, cable tensiometers, tension and compression gauges utilizing the manual mode, (hand crank only).

The MULTITEST Motorized System consists of the Monitor, Motorized Loader, Roller Cabinet and Extension Arm. Please order the transducers separately based on your individual needs. (Not for use with impact and pulse tools.)

Features

- Automatic sensor recognition with "smart" transducers
- Range: 5 in. oz. to 2000 ft. lb. torque (bi-directional)
- Accuracy: ± 0.25% of indicated value, CW & CCW, from 10% to 100% of full scale
- Dual mode function (manual & automatic)
- Automatic speed control
- Built-in, low profile serial printer
- Date and time stamp for stored values
- Statistical analysis performed on stored data
- Emergency stop button
- Programmable manual or automatic options for clear, store and print functions
- Recall and review of stored torque values
- Track, peak, first peak, power tool modes
- RS232C port, analog output
- Eight torque measurement units: in. oz., in. lb., ft. lb., Nm, dNm, cNm, mkg and cmkg
- Six force units: ounce, pound, newton, deciNewton, kilopound and gram
- Automatic lock-up for transducer protection
- All transducers are individually serialized with matching certificate of calibration traceable to N.I.S.T.

MODEL 2800-1 INCLUDES:

Product Code	Description
2000-810-01	MULTITEST Digital Monitor
2000-800-02	Motorized Loader with roller cabinet
2000-550-02	Extension Arm for Long Torque Wrench, Reach up to 80"

Note: Transducers not included, order separately as required. Made in U.S.A.

Dual Mode Function Manual and Automatic

CDI TORQUE PRODUCTS

SURETEST PREMIER CALIBRATION SYSTEM

The **SURETEST Model 5000-1** is a laboratory grade instrument which captures torque measurements with a user friendly interface. It features a large LCD graphical display. It may be used with a single transducer or can be used as the principal component of a Torque Calibration System.

The SURETEST features versatile data acquisition capabilities including measurement storage, retrieval, statistical analysis and automatic downloading to an external printer/computer. The SURETEST stores, recalls and downloads up to 3000 torque readings. The system provides readings with an accuracy of ± .25% of indicated value and features multiple languages: English, Spanish, French, Japanese and German.

The SURETEST Torque Calibration System may be ordered in three different combinations. The "Premier", the "Supreme" and the "Basic" systems are described on these pages. In addition, you may order any component separately to build your own "custom" system.

Features

- Large LCD graphical display
- Five built-in languages
- Date and time stamp
- Dual RS-232 ports, analog output
- SPC built-in
- Automatic downloading
- Accuracy: ± 0.25% of indicated value, CW & CCW, from 10% to 100% of full scale
- Transducers available from 5 in. ozs. to 2000 ft. lbs. of torque
- All transducers are "smart" (plug and play)
- Readout in eight different engineering units
- Stores and recalls 5000 torque values (date & time)
- Fully automatic voltage input adaptation (100 - 240 VAC input)
- Data is saved when SURETEST is turned off
- All transducers are individually serialized with matching certificate of calibration traceable to N.I.S.T.

Set-up is quick and easy utilizing soft touch keys.

MODEL 5000-1 INCLUDES:

Product Code	Description
5000-ST	Suretest Monitor w/Cable and Case
2000-600-02	Mechanical Loader Max 2000 ft.lb.
2000-100-02	Roller / Storage Cabinet 45" W x 24" D x 33" H
2000-400-02	4 in 1 Transducer Kit-Range 4 in. lb. to 250 ft. lb.
2000-500-02	4 in 1 Transducer Adapter Kit
2000-4-02	Transducer Kit-Range 5-50 in. oz.
2000-5-02	Transducer Kit-Range 15-200 in. oz.
2000-12-02	Transducer Kit-Range 60-600 ft. lb.
2000-13-02	Transducer Kit-Range 100-1000 ft. lb.
2000-14-02	Transducer Kit-Range 200-2000 ft. lb.
2000-550-02	Extension Arm for Long Torque Wrench, Reach up to 80"
900-0-1KIT	¼" drive, 50 in. lb. Capacity Joint Rate Simulator
900-2-01KIT	⅜" drive, 400 in. lb. Capacity Joint Rate Simulator
900-3-01KIT	⅜" drive, 1000 in. lb. Capacity Joint Rate Simulator
2000-750-02	Torque Screwdriver Testing Kit for 2000-600-02 Loader

Product Code	Description
2000-320-0	Weight Set #1
2500-50-0	2½" Calibration Wheel
2000-151-0	5" Calibration Wheel
2000-152-0	10" Butterfly Calibration Wheel
2000-154-0	40" Calibration Arm
390-2-2	4 oz. Hanger Calibration Weight Tray
2000-301	8 oz. Hanger Calibration Weight Tray
2000-304-0	7.5 lb. Calibration Weight Tray
2000-302-0	15 lb. Calibration Weight Tray
2000-303-0	50 lb. Calibration Weight Tray
2000-250-02	Calibration Stand Kit
2000-SW	Wedgelink Software
2000-50-1	Cable from MULTITEST or SURETEST to PC
2000-50-2	Cable from MULTITEST or SURETEST to External Serial Printer

Easy, quick change transducers.

Made in U.S.A.

CDI TORQUE PRODUCTS

SURETEST SUPREME CALIBRATION SYSTEM

CDI's Mid-Range Torque System Model 5000-2. Listed below are all of the components to CDI's "Supreme" SURETEST Torque Calibration System. This mid-range torque system has a range from 5 in. ozs. to 2000 ft. lbs. Choose SURETEST for unsurpassed accuracy and reliability in a torque calibration system. Also includes an extension arm for long torque wrenches and 3 joint rate simulators for testing power tools. (Not for use with impact and pulse tools.) PC compatible software and cables are included.

MODEL 5000-2 INCLUDES:

Product Code	Description
5000-ST	Suretest Monitor w/Cable and Case
2000-600-02	Mechanical Loader Max 2000 ft.lb.
2000-100-02	Roller / Storage Cabinet 45" W x 24" D x 33" H
2000-400-02	4 in 1 Transducer Kit-Range 4 in. lb. to 250 ft. lb.
2000-500-02	4 in 1 Transducer Adapter Kit
2000-4-02	Transducer Kit-Range 5-50 in. oz.
2000-5-02	Transducer Kit-Range 15-200 in. oz.
2000-12-02	Transducer Kit-Range 60-600 ft. lb.
2000-13-02	Transducer Kit-Range 100-1000 ft. lb.
2000-14-02	Transducer Kit-Range 200-2000 ft. lb.
2000-550-02	Extension Arm for Long Torque Wrench, Reach up to 80"
900-0-1KIT	¼" drive, 50 in. lb. Capacity Joint Rate Simulator
900-2-01KIT	⅜" drive, 400 in. lb. Capacity Joint Rate Simulator
900-3-01KIT	⅜" drive, 1000 in. lb. Capacity Joint Rate Simulator
2000-SW	Wedgelink Software
2000-50-1	Cable from MULTITEST or SURETEST to PC
2000-50-2	Cable from MULTITEST or SURETEST to External Serial Printer

Made in U.S.A.

Set-up is quick and easy utilizing soft touch keys

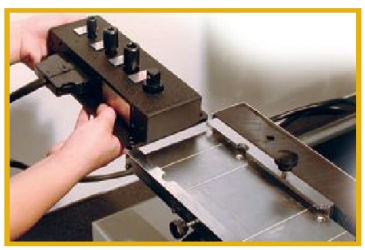

4 in 1 Transducer Slides Easily into Adapter Kit

Telescoping Arm extends to accommodate 600 ft. lbs. wrenches

Quick Release Pins make changing transducers a snap

CDI TORQUE PRODUCTS

SURETEST™ BASIC CALIBRATION SYSTEM

The **SURETEST Model 5000-3** is a laboratory grade instrument which captures torque measurements with a user friendly interface. It features a large LCD graphical display. It may be used with a single transducer or can be used as the principal component of a Torque Calibration System.

The SURETEST features versatile data acquisition capabilities including measurement storage, retrieval, statistical analysis and automatic downloading to an external printer/computer. The SURETEST stores, recalls and downloads up to 3000 torque readings. The system provides readings with an accuracy of +/- .25% of indicated value and features multiple languages: English, Spanish, French, Japanese and German.

Features

- Large LCD graphical display
- Five built-in languages
- Date and time stamp
- Dual RS-232 ports, analog output
- SPC built-in
- Automatic downloading
- Accuracy is +/- 0.25% of indicated value, CW & CCW, from 10% to 100% of full scale
- Transducers available from 5 in. ozs. to 2000 ft. lbs. of torque
- All transducers are “Smart” (Plug and Play)
- Readout in eight different engineering units
- Stores and recalls 3000 torque values (Date & Time)
- Fully automatic voltage input adaptation (100 - 240 VAC input)
- Data is saved when SURETEST is turned off
- All transducers supplied with certification
- All transducers are individually serialized with matching certificate of calibration traceable to N.I.S.T.

MODEL 5000-3 INCLUDES:

Product Code	Description
5000-ST	Suretest Monitor w/Cable and Case
600TL-2	Mechanical Loader 600 ft. lb.
2000-400-02	4 in 1 Transducer Kit-Range 4 in. lb. to 250 ft. lb.
2000-500-02	4 in 1 Transducer Adapter Kit
2000-12-02	Transducer Kit-Range 60-600 ft. lb.

Made in U.S.A.

4 in 1 Transducer Kit with Mounting Adapter.

CUSTOM CALIBRATION SYSTEMS

Don’t see the exact system you’re looking for? Please call customer service to request a quotation on a custom calibration system. We will provide assistance designing a testing system to fit your application and specifications.

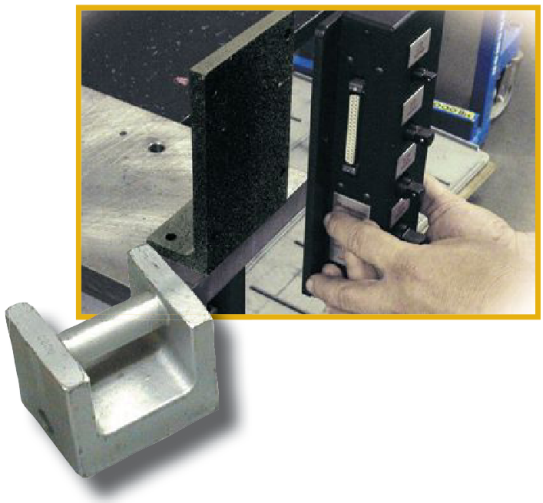

CDI TORQUE PRODUCTS

TEST/CALIBRATION ACCESSORIES

CDI's **calibration equipment** is expressly designed to calibrate the complete line of CDI Torque Transducers. All weight trays, arms and brackets supplied by CDI Torque Products are built with precision accuracy to meet the demanding needs of the calibration professional. All calibration wheels and arms are certified as to length, and supplied with a certificate of accuracy, which is traceable to N.I.S.T. (National Institute of Standards and Technology). Weights, trays and hangers are weight certified and are also supplied with a certificate of accuracy traceable to N.I.S.T. Mass Classification is Class F. Mating adapters are available to facilitate the use of the various components. Written procedures are available upon request for calibrating any of CDI's manufactured torque products.

TEST/CALIBRATION ACCESSORIES

Product Code	Description
2000-750-02	Torque Screwdriver Testing Kit for 2000-600-02 Loader
2000-750-06	Torque Screwdriver Testing Kit for 600TL Loader
2000-320-0	Weight Set #1 - For all Transducers
2000-321-0	Weight Set #2 - For 200 in. oz. to 600 ft. lbs.
2000-322-0	Weight Set #3 - For 600 ft. lb. to 2000 ft. lbs.
390-2-2	4 oz. Hanger Calibration Weight Tray
2000-301	8 oz. Hanger Calibration Weight Tray
2000-302-0	15 lb. Calibration Weight Tray
2000-303-0	50 lb. Calibration Weight Tray
2000-304-0	7.5 lb. Calibration Weight Tray
2000-250-02	Calibration Stand Kit
2500-50-0	2½" Calibration Wheel
2000-151-0	5" Calibration Wheel
2000-152-0	10" Butterfly Calibration Wheel
2000-154-0	40" Calibration Arm
2000-152-3	½" x ⅜" Calibration Arm Adapter
2000-226-3	¾" x ½" Sq. Drive Reducer
2000-226-2	1" x ¾" Calibration Arm Adapter
2000-154-8	1 ¼" x ¾" Calibration Arm Adapter
S/2000-221-0	1 ¼" x ¾" Adapter for 40" Arm
342-35	Transducer Mounting Bracket up to 1000 in. lb. (TB342/1)
342-36	Transducer Mounting Bracket 125-600 ft. lb. (TB342/2)
2000-150-03	Transducer Bracket, 1000-2000 ft.lb.
343-25	Transducer Mounting Bracket 4 in 1 ETT (TB343)

Made in U.S.A.

CDI TORQUE PRODUCTS

DIGITAL TORQUE TESTER™ (DTT)

TEST THE HEALTH OF YOUR TORQUE WRENCHES - ANYWHERE WITH THE DIGITAL TORQUE TESTER.

Utilizing the testing protocol and standards developed by the American Society of Mechanical Engineers (ASME)

The **Digital Torque Tester™ (DTT)** is designed to be an affordable torque tester that can be mounted on a wall or used in a bench-top vise to allow the operator to conveniently test torque wrenches and torque screwdrivers. It features an easy to use touch pad screen to capture peak torque values during a test in real time, and download stored torque data to a PC. All DTT torque testers are sold in a kit with the complete tester, hard carrying case, a socket driver reducer adapter and AC/DC power supply.

Features

- Integral Transducer and sturdy housing allow mounting in virtually any position
- Integral Transducer: Full bridge strain gage, 350 ohm, 1500uE, 3mV/V F.S, 3.75 excitation.
- Units of Torque: Nm, kgcm, ft.lb., in.lb., in-oz.
- Audible (tone) and LED light-bar Present Alerts
- Torque Accuracy: ±0.5% ±1 count CW and CCW from 10 to 100% of full scale at 25° C
- LCD Touch Screen: 4.7 in. color graphics display
- Screen resolution: 480 X 272 pixels
- Display Accuracy: 4 digits, 9999 cycle counts
- Six "AA" Alkaline cells for battery power included
- Track, Peak and First Peak modes of operation
- Operating Temperature: 40 to 110° F (5 to 42° C)
- Storage Temperature: 0 to 122° F (-20 to 50° C)
- Humidity up to 85% non-condensing
- EU/CE-DE, ES, FR, IT, NL, PT, UK and Japanese language manual
- Certificate of N.I.S.T. traceability from 10% to 100% of full scale
- Includes storage case, AC adapter and USB cable

Digital Torque Tester with optional table mounting bracket.

DIGITAL TORQUE TESTER™ (DTT)

Product Code	Female Drive	Range English	Range, Nm	Range, kgcm
1001-O-DTT	1/4"	10 - 100 in.oz.	.07 - .706	.72 - 7.20
501-I-DTT	1/4"	5 - 50 in.lb.	.56 - 5.65	5.76 - 57.60
2502-I-DTT	3/8"	25 - 250 in.lb.	2.82 - 28.25	23.80 - 288.0
4002-I-DTT	3/8"	40 - 400 in.lb.	4.52 - 45.2	46.08 - 460.8
2503-F-DTT	1/2"	14 - 250 ft.lb.	18.98 - 338.96	1.93 - 34.56 kgm
6004-F-DTT	3/4"	60 - 600 ft.lb.	81.35 - 813.5	8.30 - 82.95 kgm

Accuracy:	± 0.50% 10% to 100% CW & CCW of indicated test value @ 25° C (Except 2503 -F-DTT)
Units of Measure:	Nm, kgcm, ft.lb., in.lb., in.oz., kgm, cNm
Operation Modes:	TRACK, PEAK, FIRST PEAK
Operating Temperature:	10 to 32° C (50 to 90° F)
Storage Temperature:	-20 to 50° C (-2 to 122° F)
Humidity:	85% Relative Humidity @ 21° C (70° F)
Power Supply:	Included 9-volt A/C D/C adapter. 6 AA batteries included.
Data Storage/Recall:	Memory Capacity – 500 Records (Complete Check Mode Only.)
Dimensions:	W - 10" x H - 16" x D - 2.5"
Weight:	(Tester Only) - 10.7 lbs., (with Carrying Case) - 17.4 lbs.

USA Made in U.S.A.

CDI TORQUE PRODUCTS
DIGITAL TORQUE TESTER™ (DTT)

Sequential Process

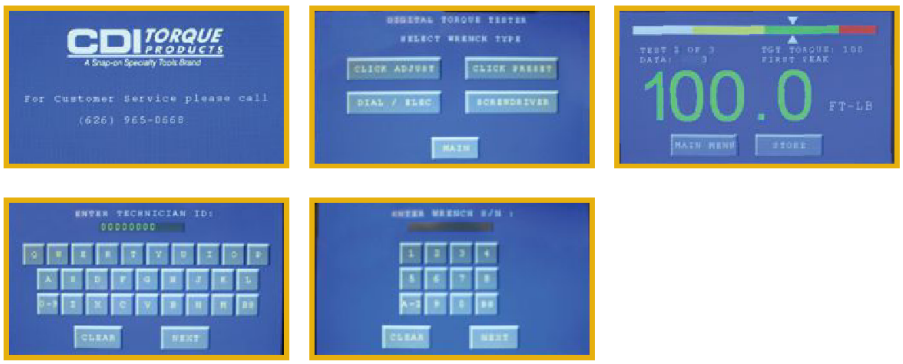

American Society of Mechanical Engineers (ASME) Emulation test of 20% / 60% / 100%

Portable, quick and accurate tester for all click wrenches.

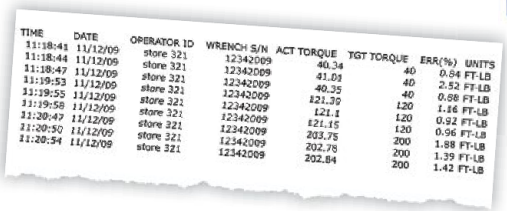

TIME	DATE	OPERATOR ID	WRENCH S/N	ACT TORQUE	TGT TORQUE	ERR(%)	UNITS
11:18:41	11/12/09	store 321	12342009	40.34	40	0.84	FT-LB
11:18:44	11/12/09	store 321	12342009	41.01	40	2.52	FT-LB
11:18:47	11/12/09	store 321	12342009	40.35	40	0.88	FT-LB
11:19:53	11/12/09	store 321	12342009	121.39	120	1.16	FT-LB
11:19:55	11/12/09	store 321	12342009	121.1	120	0.92	FT-LB
11:19:58	11/12/09	store 321	12342009	121.15	120	0.96	FT-LB
11:20:47	11/12/09	store 321	12342009	203.75	200	1.88	FT-LB
11:20:50	11/12/09	store 321	12342009	202.78	200	1.39	FT-LB
11:20:54	11/12/09	store 321	12342009	202.84	200	1.42	FT-LB

Sample torque data report from DTT

Perfect for checking dial torque wrenches.

DTT OPTIONAL ACCESSORIES

Product Code	Description
2344-0050-03	Table Mounting Bracket for DTT Series Testers

Made in U.S.A.

CDI TORQUE PRODUCTS

COMPUTORQ II ELECTRONIC TORQUE WRENCHES

The **COMPUTORQ II** is our state-of-the-art Digital Programmable Torque Wrench. It has many applications, including precision torquing of critical fasteners, tracking applied torque for quality control testing, as well as destructive component testing. The Computorq II is easy to program using the soft touch keypad. Simply program a "target" torque including upper and lower limits, and the wrench will signal with a beep when that torque setting is reached. If the user exceeds the target torque, an alarm tone sounds and the red light flashes. Computorq II is available in six models with ranges from 5 in. lbs. up to 1000 ft. lbs.

Features

- Up to 4000 torque values can be stored in memory
- Downloading capability to a printer/computer datalogger via RS232
- Selectable modes of operation are "peak hold" and "track"
- Target torque values are easily programmed and viewed through the keypad
- Available torque ranges from 5 in. lb. to 1000 ft. lb.
- A 9v alkaline battery is standard for 60 hours of operation
- Accuracy: ± 1% of indicated value, CW & CCW, from 20% to 100% of full scale;
  ± 1%, plus 5 increments from 10% to 20% of full scale
- All calibration data is stored in the microprocessor
- Selectable baud rate for downloading to a printer/computer/datalogger.
  Options are 300, 600, 1200, 2400, 4800, 9600, or 19200
- Meets or exceeds ASME B107.28 - 2005

COMPUTORQ II ELECTRONIC TORQUE WRENCHES

Product Code	Drive	Torque Range	Incr.	Length In.	Wt. Lbs.
501CI-II	¼"	5 - 50 in. lb.	.01 in. lb.	13.5	1.5
		.4 - 4.2 ft. lb.	.001 ft. lb.		
		5.6 - 56 dNm	.01 dNm		
		.56 - 5.6 Nm	.01 Nm		
		5.7 - 57 cmkg	.01 cmkg		
		.057 - .57 mkg	.001 mkg		
2502CI-II	⅜"	25 - 250 in. lb.	.1 in. lb.	14.9	2.0
		2 - 20 ft. lb.	.01 ft. lb.		
		28 - 282 dNm	.1 dNm		
		2.8 - 28 Nm	.01 Nm		
		29 - 288 cmkg	.1 cmkg		
		.29 - 2.88 mkg	.001 mkg		
502CF-II	⅜"	60 - 600 in. lb.	.1 in. lb.	14.9	2.0
		5 - 50 ft. lb.	.01 ft. lb.		
		68 - 677 dNm	.1 dNm		
		6.8 - 67.7 Nm	.01 Nm		
		69.1 - 691 cmkg	.1 cmkg		
		.7 - 6.9 mkg	.001 mkg		
2503CF-II	½"	300 - 3000 in. lb.	1 in. lb.	21.5	3.2
		25 - 250 ft. lb.	.1 ft. lb.		
		340 - 3380 dNm	2 dNm		
		34 - 338 Nm	.1 Nm		
		340 - 3400 cmkg	2 cmkg		
		3.4 - 34 mkg	.01 mkg		
6004CF-II	¾"	720 - 7200 in. lb.	3 in. lb.	46.5	9.5
		60 - 600 ft. lb.	.2 ft. lb.		
		810 - 8130 dNm	.1 ft. lb.		
		81 - 813 Nm	.1 Nm		
		830 - 8300 cmkg	4 cmkg		
		8.3 - 83 mkg	.01 mkg		
10005CF-II	1"	100 -1000 ft. lb.	.1 ft. lb.	74.0	19.0
		135 - 1355 Nm	.1 Nm		
		14 - 138 mkg	1 mkg		

Optional Cables: Product Code P113-50 Computorq to 9 Pin P.C.
Optional Cables: Product Code P113-60 Computorq to 25 Pin Printer
N.I.S.T. traceable calibration certificate included.

Made in U.S.A.

CDI TORQUE PRODUCTS

COMPUTORQ 3 ELECTRONIC TORQUE WRENCHES

The **COMPUTORQ 3** Electronic Torque Wrench is a simple to use digital readout wrench that displays real time torque values in any of four torque units, ft.lbs., in.lbs., Nm, kg.cm. Simply set the desired torque value and apply force until the green LED illuminates. Great for light industrial, automotive, motorcycle, watercraft and aircraft applications.

Features

- Sleek new design
- 15-degree flex ratcheting head
- Push button socket release head
- Large, easy to read digital display
- Long battery life, uses 2 each CR123 lithium batteries
- Ergonomically designed molded non-slip rubber grip
- Torques in both clockwise and counterclockwise directions
- Battery saving auto-shutoff after two minutes
- COMPUTORQ 3 remembers last unit and torque setting selected
- Audible tone sounds when set torque value is reached, if the set torque value is exceeded, an alarm tone will sound.
- 3 color LED light bar
  YELLOW LED indicates approaching desired torque setting
  GREEN LED indicates desired torque value is reached
  RED LED indicates fastener was overtorqued, loosen and retighten.
- When desired torque value is reached, display will hold value and flash for ten seconds.
- COMPUTORQ 3 will operate in any of four torque units, foot pounds (ft. lbs.), inch pounds (in. lbs.), newton meter (Nm) or kilogram centimeter (kg. cm.).
- ACCURACY:
  ±2% CW of readings from 20% to 100% of full scale
  ±3% CCW of readings from 20% to 100% of full scale
- N.I.S.T. traceable certificate of calibration included

COMPUTORQ 3 Display and 3 Color LED Light Bar

STANDARD MODELS

Product Code	Drive	Ft. Lb.	In. Lb.	Nm	Kg. Cm.	Length In. (mm)	Wt. Lbs. (kgs)
2401CI3	¼"	2.0 - 20.0	24 - 240	2.71 - 27.10	27.6 - 276	15 (381)	2.0 (.91)
1002CF3	⅜"	10.0 - 100.0	120 - 1200	13.6 - 135.6	138 - 1382	17 (432)	2.2 (1.0)
2503CF3	½"	25 - 250	300 - 3000	33.8 - 338	345 - 3456	27 (686)	3.5 (1.59)

Made in U.S.A.

HIGH ACCURACY MODELS

Product Code	Drive	Ft. Lb.	In. Lb.	Nm	Kg. Cm.	Length In. (mm)	Wt. Lbs. (kgs)
2401CI3HA*	¼"	2.0 - 20.0	24 - 240	2.71 - 27.10	27.6 - 276	15 (381)	2.0 (.91)
1002CF3HA*	⅜"	10.0 - 100.0	120 - 1200	13.6 - 135.6	138 - 1382	17 (432)	2.2 (1.0)
2503CF3HA*	½"	25 - 250	300 - 3000	33.8 - 338	345 - 3456	27 (686)	3.5 (1.59)

The certification of accuracy provided per ASME and ISO Standards is 20% to 100% of full scale.

***HIGH ACCURACY** 1% Clockwise direction only. It couldn't be easier to use!*

Made in U.S.A.

CDI TORQUE PRODUCTS

TORQUE & ANGLE™ ELECTRONIC TORQUE WRENCHES

The CDI **Torque and Angle Electronic Wrench** incorporates 21st Century Technology in a simple to use digital wrench. Specifically designed to meet the needs of the torque professional where torque plus angle is required. It features three units of torque, ft.lbs. In.lbs. and Nm as well as the angle mode.

The Torque and Angle wrench allows the technician to apply a specific torque load, followed by the angle specification, all in one convenient wrench. It features a three LED light bar and audible buzzer. As the angle mode is a separate function, the wrench can also be used as a stand alone digital torque wrench.

Features

- Accuracy is +/- 2% CW, +/- 3% CCW of indicated value
- Gyro chip senses 360° of movement, and is accurate to within +/- 3.8°
- No maintenance, just change batteries at 80 hours
- VERY easy to set up and use quickly
- Almost impossible to over torque
- Digital torque measurement and digital angle measurement in one convenient package
- Ergonomic non-slip cushion grip
- 15% Flex Ratchet head
- Long battery life, uses two CR123 lithium batteries
- Convenient, push button socket release ratchet head
- 3 step LED visual signal system:
  Yellow Light = approaching target torque
  Green Light = target torque reached
  Red Light = over torque indicator
- N.I.S.T. traceable certificate of calibration included

TORQUE & ANGLE™ ELECTRONIC TORQUE WRENCHES

Product Code	Drive	Ft. Lb.	In. Lb.	Nm	Angle	Length In. (mm)	Wt. Lbs. (kgs)
1002TAA	⅜"	10 - 100	120 - 1200	12.6 - 135.6	0-360°	17 (432)	2.2 (1.0)
2503TAA	½"	25 - 250	300 - 3000	33.8 - 338	0-360°	27 (686)	3.5 (1.59)

The certification of accuracy provided per ASME and ISO Standards is 20% to 100% of full scale.

USA Made in U.S.A.

The yellow LED illuminates within 10% of target torque.

The green LED illuminates within 4% of target torque. Continuous buzzer sounds when target is reached.

The red LED illuminates 4% beyond target torque, indicating fastener was overtorqued. Rapid "alarm" buzzer sounds.

CDI TORQUE PRODUCTS

HEAVY-DUTY TORQUE & ANGLE™ TORQUE WRENCH

LEADING THE WAY IN HEAVY-DUTY TORQUE AND ANGLE APPLICATIONS WITH INNOVATIVE SOLUTIONS THAT MAKE A DIFFERENCE IN DOING THE JOB RIGHT.

The CDI **600 ft.lb. Heavy-Duty Torque & Angle™ Torque Wrench** eliminates the need for angle gauges and protractors, providing the most accurate and efficient way to achieve torque plus angle tightening sequences now specified by many manufacturers. The digital readout displays a torque setting then with a push of a button, switches to the angle mode. Angle readout not affected by ratcheting. Angle calculation based on the same gyroscopic technology that maintains helicopters at level flight.

- Torque Accuracy: (2% CW & 3% CCW FROM 20 – 100% F.S.) (4% CW & 6% CCW FROM 10 – 19% F.S.)
- Angle Accuracy: ± 3.8% of indicated value
- Angular Display Resolution: 1°

Features

- Torque Units: ft.lb., in.lbs., Nm
- Audible (tone) Preset Alerts
- Display Resolution: 0.1 ft.lb., 0.1 Nm, 1 in.lb.
- Comfortable non-slip grip handle
- Sealed Ratchet Head
- 4 "AA" Alkaline Batteries Included
- Low Battery Indicator and Auto Shutoff after two minutes idle
- Operating Temperature: 40 - 110° F. (5 - 42° C)
- Storage Temperature: 0 - 122° F (-20 - 50° C)
- Humidity up to 90% non-condensing
- EU/CE-DE, ES, FR, IT, NL, PT, UK and Japanese language manual
- Certificate of N.I.S.T. traceability for 20% to 100% of full scale
- Includes storage case

HEAVY-DUTY TORQUE & ANGLE™ TORQUE WRENCH

Product Code	Drive	Ft. Lb.	In. Lb.	Nm	Angle	Length In. (mm)	Wt. Lbs. (kgs)
6004TAA	¾"	120 - 600	1440 - 7200	156 - 780	0-360°	49 (1244.6)	14 (6.35)

Made in U.S.A.

CDI TORQUE PRODUCTS

ELECTRONIC DIAL TORQUE WRENCH

The new **Electronic Dial (ED)** torque wrench features solid-state electronics for accurate torque application and measurement. ED's design provides easy set-up and usage. There is no need to look directly at the digital readout as the wrench features 3 indicating lights and an audible buzzer.

The ED wrench has unsurpassed reliability and durability -- 21st century technology in a simple, easy to read digital torque wrench.

Features

- 4 units of measure...ft lb, in lb, Nm, kg.cm.
- Accuracy: ± 1% of indicated value CW & CCW, from 20% to 100% of full scale
- 3 step LED visual signal system
  YELLOW LIGHT = approaching target torque
  GREEN LIGHT = target torque reached
  RED LIGHT = over torque indicator
- Audible tone when desired torque is reached
- Alarm tone sounds if wrench is overtorqued
- Ergonomically designed wrench body
- Display can be turned 180 degrees to allow left hand usage
- Battery cover designed to be aviation FOD proof
- Holds "peak" torque reading for 10 seconds
- Constructed of special Capron® material for long life and durability
- Resistant to the majority of chemicals used in industrial environments
- Wrench can be hung on tool board
- Bar graph displays orientation of torque application (left or right hand)
- Uses standard 9 volt alkaline battery
- N.I.S.T. traceable certificate of calibration included
- Meets or exceeds ASME B107.28 – 2005

ELECTRONIC DIAL TORQUE WRENCH

Product Code	Drive	In. Lb.	Ft. Lb.	Nm	Kg. Cm.	Length In. (mm)	Wt. Lbs. (kgs)
501ED	¼"	5 - 50	.42 - 4.17	.56 - 5.65	57 - 57.61	11.5 (292)	1.25 (.57)
2502ED	⅜"	25 - 250	2.08 - 20.83	2.82 - 28.25	28 - 280.03	14.5 (368)	1.51 (.68)
6002ED	⅜"	60 - 600	5 - 50	6.79 - 67.79	69 - 691.27	14.5 (368)	1.51 (.68)

Made in U.S.A.

CDI "ED": Easy to change dial orientation.

The yellow LED illuminates within 10% of target torque.

The green LED illuminates within 4% of target torque. Continuous buzzer sounds when target is reached.

The red LED illuminates 4% beyond target torque, indicating fastener was overtorqued. Rapid "alarm" buzzer sounds.

CDI TORQUE PRODUCTS

TORQUE SCREWDRIVERS - MICRO-ADJUSTABLE

Adjustable models offer versatility for applications that require more than one torque value. These torque screwdrivers are particularly suited for the electronics industry and for instrument assembly work. A simple, cam-over design prevents over-tightening and possible damage to components.

Torque settings are easily and accurately changed with a unique adjusting knob and easy-to-read window scale. Adjusting the screwdriver is simple. Just pull out the adjusting knob to unlock, turn to the desired setting, then push the knob in until it clicks!

Positive locking knob makes accidental setting changes impossible. Automatic lock in counterclockwise direction makes fastener removal a snap. The Micro-Adjustable series includes six models with torque settings ranging from 20 in. ozs. to 40 in. lbs.

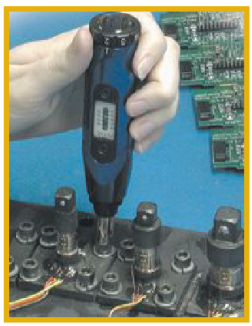

Features

- 6 models available
- Positive locking pull down adjustment knob
- Trilobular comfort grip
- Universal 1/4" hex bit holder with strong rare earth magnet
- Cam-over torque limiting clutch
- Easy-to-read window scale
- Light weight
- Automatic lock in CCW direction for disassembly
- Accuracy: ± 6% of indicated value, CW, from 20% to 100% of full scale
- Individually serialized with matching certificate of calibration traceable to N.I.S.T.
- Meets or exceeds ASME B107.14 - 2004

Trilobular Comfort Grip

TORQUE SCREWDRIVERS - MICRO-ADJUSTABLE

Product Code	Torque Range	Increments	W x L Inches	Wt. Oz.
61SM	20 - 100 in. ozs.	1 in. oz.	1.1 x 5.5	6.8
151SM	3 - 15 in. lbs.	.2 in. lbs.	1.1 x 6.25	8.0
401SM	5 - 40 in. lbs.	.5 in. lbs.	1.2 x 6.75	10.8
61NSM	10 - 80 cNm	1 cNm	1.1 x 5.5	6.8
151NSM	40 - 200 cNm	2 cNm	1.1 x 6.25	8.0
401NSM	50 - 450 cNm	5 cNm	1.2 x 6.75	10.8

Made in U.S.A.

CDI TORQUE PRODUCTS

TORQUE SCREWDRIVERS - PRE-SET

The tamper resistant design of the **Pre-Set** series is particularly suited for high-volume use in assembly operations. A simple, cam-over design prevents over-tightening and possible damage to components.

Pre-set Screwdrivers may be ordered factory set at no additional charge or they may be easily set with any quality torque calibration system. The end cap removes for easy access to the 1/8" hex adjustment screw. A hex adjustment key is included with each driver.

The Pre-Set series includes four models with available torque settings from 6 in. ozs. up to 40 in.lbs. When precision and repeatability are a must, the choice is simple - CDI Torque Screwdrivers.

Features

- 4 models available
- Trilobular comfort grip
- Universal 1/4" hex bit holder with strong rare earth magnet
- Cam-over torque limiting clutch
- Rugged, light weight aluminum body
- May be ordered pre-set from factory
- Automatic lock in CCW direction
- Accuracy: ± 6% of indicated value, CW, from 20% to 100% of full scale
- Calibration certificate available at additional costs
- Meets or exceeds ASME B107.14 - 2004

Made in U.S.A.

TORQUE SCREWDRIVERS - PRE-SET

Product Code	Torque Range	W x L Inches	Wt. Oz.
21SP	6 - 32 in. ozs.	1.1 x 4.5	5.3
61SP	10 - 100 in. ozs.	1.1 x 5.6	7.0
151SP	1.5 - 15 in. lbs.	1.1 x 5.6	7.0
401SP	4 - 40 in. lbs.	1.2 x 6.2	9.6

Note: Please specify torque setting when placing order.

CDI TORQUE PRODUCTS

TORQUE LIMITING T-HANDLE - PRE-SET

Product Code	Pre Set Value Nm	Ft. Lb.	In. Lb.	Bit
TLPT4NM	4.0	2.9	35.4	4 mm
TLPT5NM	5.0	3.7	44.3	4 mm
TLPT6NM	6.0	4.4	53.1	4 mm

Features

- Torque Limiting Technology to Prevent Over-Tightening
- Magnetic Shank to Interchange Bits as Needed
- Rounded T-Handle Grip for Added Comfort
- Hi-Vis Color for Easy Identification
- Includes Certificate of Calibration

TLPT4NM

TLPT5NM

TLPT6NM

ergo

BAHCO

FIXED-SETTING TORQUE SCREWDRIVERS

Torque Screwdrivers was specially developed for changing cutting plates on automatic cutting machines, in order to ensure consistent accurate cutting.

FIXED-SETTING TORQUE SCREWDRIVERS

Product Code*	Description	Replacement Blades Torx Plus	Torx
BE-6990-IP6	.6 Nm	BE-6990-IP6-KL	BE-6990TX-T6-KL
BE-6990-IP7	.9 Nm	BE-6990-IP7-KL	BE-6990TX-T7-KL
BE-6990-IP8	1.2 Nm	BE-6990-IP8-KL	BE-6990TX-T8-KL
BE-6990-IP9	1.4 Nm	BE-6990-IP9-KL	BE-6990TX-T9-KL
BE-6990-IP10	2.0 Nm	BE-6990-IP10-KL	BE-6990TX-T10KL
BE-6990-IP15	3.0 Nm	BE-6990-IP15-KL	BE-6990TX-T15KL

* Includes one Torx & one Torx Plus Blade

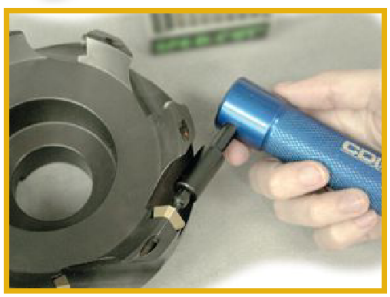

Prevents premature wear of carbide inserts and damage to cutter head due to improper clamp load.

CDI TORQUE PRODUCTS

TORKY - PRE-SET WRENCHES

CDI's **TORKY** is a right angle pre-set torque wrench. Torky is designed for production torque applications that require higher values than a torque screwdriver can deliver. The comfortable design eases the strain of repeated uses. The torque value may be pre-set at the factory or it may be set by the operator utilizing a torque tester. When the proper torque value is reached, a momentary release or "break" can be felt. Available in three drive styles to fit most needs.

Features

- Three models available
- Simple, easy to use design
- Ruggedly built for years of reliable service
- Operates bi-directionally
- Accuracy: ± 6% of indicated value, CW, from 20% to 100% of full scale
- Calibration certificate available at additional costs

TORKY - PRE-SET WRENCHES

Product Code	Drive	Torque Range	W x L Inches	Wt. Oz.
1501TPA-1	¼" Female Hex	20-170 in.lbs.	1 X 5.25	8.3
1501TP-1	¼" Male Square	20-170 in.lbs.	1 X 5.25	8.3
1502TP-1	⅜" Male Square	20-170 in.lbs.	1 X 5.25	8.3

Note: Please specify torque setting when placing order.

USA Made in U.S.A.

CDI TORQUE PRODUCTS

DIAL TORQUE WRENCHES - SINGLE SCALE

Dial Torque Wrenches are designed for the automotive, nuclear and industrial markets in addition to military installations throughout the world. This series features sturdy torsion beam design for dependable long life and accuracy. The small frame model offers working ranges from 3 in. lbs. to 50 ft. lbs. in 1/4" and 3/8" drives. The large frame model continues from 100 ft. lbs. through 2,000 ft. lbs. with 1/2", 3/4" and 1" drives. Accuracy of both series of ± 3% meets or exceeds B107.14 - 2004, ISO 6789 bi-directionally from 20% to 100% of scale. All wrenches supplied with a N.I.S.T. traceable certificate of calibration.

Features

- Sturdy body construction insures maximum durability
- Easy to read laser marked single scale
- Large easy to read dial is shock resistant and protected by a tough metal guard
- Memory needle retains highest torque reading applied
- Calibrated in both CW and CCW direction
- Accuracy: ± 3% of indicated value, CW & CCW, from 20% to 100% of full scale
- Individually serialized with matching certificate of calibration traceable to N.I.S.T.

DIAL TORQUE WRENCHES - SINGLE SCALE

Product Code	Drive Size (In.)	English Range	Incr.	A In.	B In.	C In.	D In.	WT. Lbs.
Memory Needle Models								
301LDINSS	¼"	0-30 in.lb.	.5 in.lb.	11.5	1.1	1.2	2.75	1.1
751LDINSS	¼"	0-75 in.lb.	1 in.lb.	11.5	1.1	1.2	2.75	1.1
752LDINSS	⅜"	0-75 in.lb.	1 in.lb.	11.5	1.1	1.2	2.75	1.1
3002LDINSS	⅜"	0-300 in.lb.	5 in.lb.	11.5	1.1	1.2	2.75	1.1
6002LDINSS	⅜"	0-600 in.lb.	10 in.lb.	15	1.5	1.2	2.75	1.6
502LDFNSS	⅜"	0-50 ft.lbs.	1 ft.lb.	15	1.5	1.2	2.75	1.6
1003LDFNSS	½"	0-100 ft. lb.	2 ft. lb	21.75	2.25	1.50	2.75	3.70
1753LDFNSS	½"	0-175 ft. lb.	5 ft. lb.	21.75	2.25	1.50	2.75	3.70
2503LDFNSS	½"	0-250 ft. lb.	5 ft. lb	21.75	2.25	1.50	2.75	3.70
3504LDFNSS	¾"	0-350 ft. lb.	10 ft. lb.	28.00	2.25	1.50	2.75	5.75
6004LDFNSS*	¾"	0-600 ft. lb.	10 ft. lb.	47.00	2.50	1.50	2.75	10.10
10005LDFNSS*	1"	0-1000 ft. lb.	20 ft. lb.	74.00	2.50	3.50	3.00	30.00
Electric Signaling Models								
6004LDFESS**	¾"	0-600 ft. lb.	10 ft. lb.	47.00	2.50	1.50	2.75	10.10
10005LDFESS**	1"	0-1000 ft. lb.	20 ft. lb.	74.00	2.50	3.50	3.00	30.00
20005LDFESS***	1"	0-2000 ft. lb.	40 ft. lb.	122.00	3.50	6.50	3.50	47.00

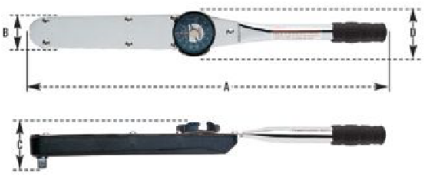

USA Made in U.S.A.

*NOTE: 6004LDFNSS and 10005LDFNSS include 1 extension handle.
**NOTE: 6004LDFESS and 10005LDFESS include 1 extension handle, indicating light and buzzer.
***NOTE: 20005LDFESS is a "T" style wrench with 1" drive female head that can be used with a torque multiplier. Includes 5 piece handle assembly, indicating light and buzzer.

CDI TORQUE PRODUCTS

DIAL TORQUE WRENCHES NEWTON METER - SINGLE SCALE

DIAL TORQUE WRENCHES NEWTON METER - SINGLE SCALE

Product Code	Drive Size (In.)	Nm Range	Incr.	A In.	B In.	C In.	D In.	Wt. Lbs.
Memory Needle Models								
1.81NLDNSS	¼"	0-1.8 Nm	.05 Nm	11.5	1.1	1.2	2.75	1.1
3.51NLDNSS	¼"	0-3.5 Nm	.1 Nm	11.5	1.1	1.2	2.75	1.1
91NLDNSS	¼"	0-9 Nm	.2 Nm	11.5	1.1	1.2	2.75	1.1
92NLDNSS	⅜"	0-9 Nm	.2 Nm	11.5	1.1	1.2	2.75	1.1
182NLDNSS	⅜"	0-18 Nm	.5 Nm	11.5	1.1	1.2	2.75	1.1
302NLDNSS	⅜"	0-30 Nm	.5 Nm	11.5	1.1	1.2	2.75	1.1
352NLDNSS	⅜"	0-35 Nm	1 Nm	11.5	1.1	1.2	2.75	1.1
702NLDNSS	⅜"	0-70 Nm	2 Nm	15	1.5	1.2	2.75	1.6
1403NLDNSS	½"	0-140 Nm	2.5 Nm	21.75	2.25	1.50	2.75	3.70
2403NLDNSS	½"	0-240 Nm	5 Nm	21.75	2.25	1.50	2.75	3.70
3503NLDNSS	½"	0-350 Nm	10 Nm	21.75	2.25	1.50	2.75	3.70
4804NLDNSS	¾"	0-480 Nm	10 Nm	28.00	2.25	1.50	2.75	5.75
8004NLDNSS*	¾"	0-800 Nm	20 Nm	47.00	2.50	1.50	2.75	10.10
14005NLDNSS*	1"	0-1400 Nm	25 Nm	74.00	2.50	3.50	3.00	30.00

*NOTE: 8004NLDNSS and 14005NLDNSS include 1 Extension handle.

USA Made in U.S.A.

CDI TORQUE PRODUCTS

DIAL TORQUE WRENCHES - DUAL SCALE

Dial Torque Wrenches are designed for the automotive, nuclear and industrial markets in addition to military installations throughout the world. This series features sturdy torsion beam design for dependable long life and accuracy. The small frame model offers working ranges from 3 in. lbs. to 50 ft. lbs. in 1/4" and 3/8" drives. The large frame model continues from 100 ft. lbs. through 2,000 ft. lbs. with 1/2", 3/4" and 1" drives. Accuracy of both series of ± 3% meets or exceeds B107.14 - 2004, ISO 6789 bi-directionally from 20% to 100% of scale. All wrenches supplied with a N.I.S.T. traceable certificate of calibration.

Features

- Sturdy body construction insures durability
- Easy to read laser marked dual scale
- Large easy to read dial is shock resistant and protected by a tough metal guard
- Memory needle retains highest torque reading applied
- Calibrated in both CW and CCW direction
- Accuracy: ± 3% of indicated value, CW & CCW, from 20% to 100% of full scale
- Individually serialized with matching certificate of calibration traceable to N.I.S.T.

DIAL TORQUE WRENCHES - DUAL SCALE

Product Code	Drive Size	English Range	Incr.	Nm Range	Incr.	A In.	B In.	C In.	D In.	Wt. Lbs.
Memory Needle Models										
301LDIN	¼"	0-30 in. lb.	.5 in. lb.	0-3.5 Nm	.1 Nm	11.5	1.1	1.2	2.75	1.1
751LDIN	¼"	0-75 in. lb.	1 in. lb.	0-9 Nm	.2 Nm	11.5	1.1	1.2	2.75	1.1
1502LDIN	⅜"	0-150 in. lb.	2 in. lb.	0-18 Nm	.5 Nm	11.5	1.1	1.2	2.75	1.1
2502LDIN	⅜"	0-250 in.lb.	5 in.lb.	0-30 Nm	.5 Nm	11.5	1.1	1.2	2.75	1.1
3002LDIN	⅜"	0-300 in. lb.	5 in. lb.	0-35 Nm	1 Nm	11.5	1.1	1.2	2.75	1.1
6002LDIN	⅜"	0-600 in. lb.	10 in. lb.	0-70 Nm	2 Nm	15	1.5	1.2	2.75	1.6
502LDFN	⅜"	0-50 ft. lb.	1 ft. lb.	0-70 Nm	2 Nm	15	1.5	1.2	2.75	1.6
1003LDFN	½"	0-100 ft. lb.	2 ft. lb	0-140 Nm	2.5 Nm	21.75	2.25	1.50	2.75	3.70
1753LDFN	½"	0-175 ft. lb.	5 ft. lb.	0-240 Nm	5 Nm	21.75	2.25	1.50	2.75	3.70
2503LDFN	½"	0-250 ft. lb	5 ft. lb	0-350 Nm	10 Nm	21.75	2.25	1.50	2.75	3.70
3504LDFN	¾"	0-350 ft. lb.	10 ft. lb.	0-480 Nm	10 Nm	28.00	2.25	1.50	2.75	5.75
6004LDFN*	¾"	0-600 ft. lb.	10 ft. lb.	0-800 Nm	20 Nm	47.00	2.50	1.50	2.75	10.10
10005LDFN*	1"	0-1000 ft. lb.	20 ft. lb.	0-1400 Nm	25 Nm	74.00	2.50	3.50	3.00	30.00
Electric Signaling Models										
6004LDFE**	¾"	0-600 ft. lb.	10 ft. lb.	0-800 Nm	20 Nm	47.00	2.50	1.50	2.75	10.10
10005LDFE**	1"	0-1000 ft. lb.	20 ft. lb.	0-1400 Nm	25 Nm	74.00	2.50	3.50	3.00	30.00
20005LDFE***	1"	0-2000 ft. lb.	40 ft. lb.	0-2800 Nm	50 Nm	122.00	3.50	6.50	3.50	47.00

USA Made in U.S.A.

*NOTE: 6004LDFN and 10005LDFN include 1 Extension handle.
**NOTE: 6004LDFE and 10005LDFE include 1 Extension handle, indicating light and buzzer.
***NOTE: 20005LDFE is a "T" style wrench with 1" drive female head that can be use with a torque multiplier. Includes 5 piece handle assembly, indicating light and buzzer.

20005LDFE "T" type Dial Wrench must be operated by two persons or a torque multiplier. The handle is over 10 ft.long.

CDI TORQUE PRODUCTS

COMFORT GRIP MICROMETER ADJUSTABLE TORQUE WRENCHES

Comfort-Grip Handle Dual Scale

Features

- Dual scale, calibrated dual direction
- Positive lock with spring loaded pull down lock ring
- Fast, accurate and easy to set
- Easy-to-read laser marked scale
- Most feature quick release buttons which provide good socket retention as well as easy socket removal
- Ergonomic comfort-grip
- Accuracy: ± 3% CW ± 5% CCW of indicated value, CW, from 20% to 100% of full scale
- Meets or exceeds ASME B107.14-2004, ISO 6789 standards
- Individually serialized with matching certificate of calibration traceable to N.I.S.T.

COMFORT GRIP MICROMETER ADJUSTABLE TORQUE WRENCHES

Product Code	Drive Size	English Range	Incr.	Nm Range	Incr.	A In.	B In.	C In.	D In.
1501MRPH	¼"	20-150 in. lb.	1	2.8 - 15.3 Nm	.12	10.00	1.06	.93	1.06
2502MRPH	⅜"	30-250 in. lb.	1	4.0 - 27.7 Nm	.12	11.25	1.06	1.06	1.06
10002MRPH	⅜"	150-1000 in. lb.	5	19.8 - 110.2 Nm	.6	16.00	1.43	1.20	1.40
1002MFRPH	⅜"	10-100 ft. lb.	1	16.9 - 132.2 Nm	.7	16.00	1.43	1.20	1.40
1503MFRPH	½"	20-150 ft. lb.	1	34 - 197 Nm	1.4	19.00	1.70	1.40	1.40
2503MFRPH	½"	30-250 ft. lb.	1	47 - 332 Nm	1.4	24.40	1.70	1.40	1.40
6004MFRPH	¾"	100-600 ft. lb.	5	169 - 779 Nm	6.8	42.00	2.50	2.10	1.40

USA Made in U.S.A.

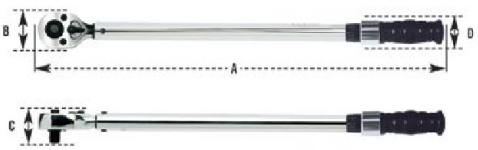

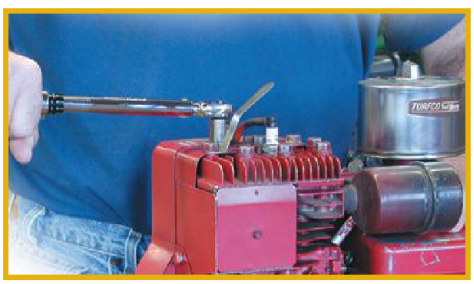

CDI TORQUE PRODUCTS

METAL HANDLE CLICK TYPE TORQUE WRENCHES

Metal Handle Dual Scale. The metal handle series offers the user a rugged, industrial strength torque wrench able to withstand the rigors of professional use. Handles are lightly knurled for a tough, non-slip grip. There are 21 models of metal handle micrometer adjustable torque wrenches available.

Features

- Dual scale, calibrated dual direction
- Positive lock with spring loaded pull down lock ring
- Fast, accurate and easy to set
- Easy-to-read laser marked scales
- Most feature quick release buttons which provide good socket retention as well as easy socket removal
- Accuracy: ± 3% CW ± 4% CCW of indicated value, CW, from 20% to 100% of full scale
- Individually serialized with matching certificate of calibration traceable to N.I.S.T.

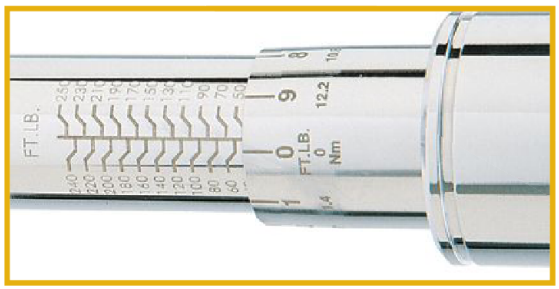

METAL HANDLE CLICK TYPE TORQUE WRENCHES

Product Code	Drive Size	English Range	Incr.	Nm Range	Incr.	A In.	B In.	C In.	D In.	Wt. Lbs.
501MRMH	¼"	10-50 in. lb.	1	1.4 - 5.4 Nm	.06	10.15	1.06	0.93	1.06	0.85
1501MRMH	¼"	20-150 in.lb.	1	2.8-15.3 Nm	0.12	10.15	1.06	0.93	1.06	0.9
1502MRMH	⅜"	20-150 in. lb.	1	2.8 - 15.3 Nm	.12	10.15	1.06	0.93	1.06	0.90
2002MRMH	⅜"	30-200 in. lb.	1	4.0 - 22.0 Nm	.12	10.15	1.06	0.93	1.06	0.85
2502MRMH	⅜"	30-250 in. lb.	1	4.0 - 27.7 Nm	.12	11.25	1.06	0.93	1.06	0.95
7502MRMH	⅜"	100-750 in. lb.	5	14.1 - 81.9 Nm	.6	16.00	1.43	1.20	1.40	2.50
10002MRMH	⅜"	150-1000 in. lb.	5	19.8 - 110.2 Nm	.6	16.00	1.43	1.20	1.40	2.50
25003MRMH	½"	300-2500 in. lb.	10	39.6 - 276.9 Nm	1.2	18.00	1.70	1.40	1.40	3.20
752MFRMH	⅜"	5-75 ft. lb.	0.5	10.2 - 98.3 Nm	.7	16.00	1.43	1.20	1.40	2.50
1002MFRMH	⅜"	10-100 ft. lb.	0.5	16.9 - 132.2 Nm	.7	16.00	1.43	1.20	1.40	2.55
1503MFRMH	½"	20-150 ft. lb.	1	34 - 197 Nm	1.4	19.00	1.70	1.40	1.40	3.15
2503MFRMH	½"	30-250 ft. lb.	1	47 - 332 Nm	1.4	24.40	1.70	1.40	1.40	3.15
4004MFRMH	¾"	80-400 ft. lb.	5	85 - 491 Nm	3.4	34.25	2.50	2.10	1.40	10.30
6004MFRMH	¾"	100-600 ft. lb.	5	169 - 779 Nm	6.8	42.00	2.50	2.00	1.15	11.85
10005MFRMH*	1"	200-1000 ft. lb.	5	305 - 1322 Nm	6.8	70.00	3.00	3.00	1.50	25.10
20005MFMHSS**	1"	300-2000 ft. lb.	10	N/A	N/A	108.50	3.15	4.25	1.65	48.75

Made in U.S.A.

*NOTE: 10005MFRMH supplied with one extension handle and is packed in a metal box.

**NOTE: 20005MFMHSS (English scale only) supplied with two extension handles, fixed/non-ratcheting head and is packed in a sturdy cardboard box.

CDI TORQUE PRODUCTS

MICROMETER ADJUSTABLE NEWTON METER TORQUE WRENCHES

Single Scale

MICROMETER ADJUSTABLE NEWTON METER TORQUE WRENCHES

Product Code	Nm Range	Sq. Drive	Incr.	A In.	B In.	C In.	D In.	Wt. Lbs.
602NMRMHSS	10-60 Nm	3/8"	0.5	16.00	1.43	1.20	1.40	2.50
1002NMRMHSS	20-100 Nm	3/8"	0.5	16.00	1.43	1.20	1.40	2.50
2003NMRMHSS	40-200 Nm	1/2"	2	19.00	1.70	1.40	1.40	3.25
3403NMRMHSS	60-340 Nm	1/2"	2	24.40	1.70	1.40	1.40	3.40
8004NMRMHSS	150-800 Nm	3/4"	5	42.00	2.50	2.10	1.40	11.85
15005NMRMHSS*	300-1500 Nm	1"	10	70.00	3.00	3.00	1.50	25.10

USA Made in U.S.A.

*NOTE: 15005NMRMHSS supplied with one extension handle and is packed in a metal box.

NOTE: All single scale Newton Meter only.

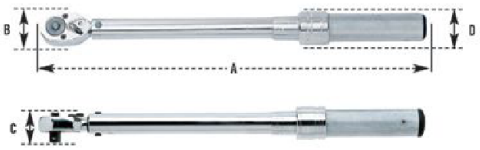

CDI TORQUE PRODUCTS

QUICK SET SPLIT BEAM TORQUE WRENCHES

This unique "split beam" measuring element provides consistently accurate readings and rugged, trouble-free performance. Fast setting of desired torque is easily accomplished by rotating adjustment knob until required torque value is displayed in the torque window. 3/4" drive model features three-piece construction for easy disassembly and storage.

Features

- CDI Sealed Ratchet Head - is virtually maintenance free; more time working with the tool, less time on tool maintenance
- Thumb Screw Type Adjustment -is faster than cycling through a micrometer style torque wrench. Guard prevents setting from being changed accidentally. Setting is displayed in window. Conversion table to Nm displayed on handle
- Sealed Neck - keeps dust and grit away from the torque mechanism for longer tool life
- "Split Beam" Measuring Element - provides accurate, reliable readings and eliminates the heavy coil spring used in conventional click type wrenches. This yields fewer moving parts, reducing friction and wear
- Cushion Grip Handle - provides comfort plus control and resists most automotive fluids
- Designed for measuring torque in a clockwise direction only. Wrench is not reversible
- Guaranteed Accuracy: Accurate within ±4% of any clockwise setting from 20% of full scale to full scale.

QUICK SET SPLIT BEAM TORQUE WRENCHES

Product Code	Drive Size	Range	Increments	Length (in.)	Ratchet
WSC-50CA	3/8"	120-600 in. lbs.	10.0 in. lbs.	17 1/8	Flex-Head
WSC-100CA	3/8"	20-100 ft. lbs.	2.0 ft. lbs.	17 1/8	Flex-Head
WSC-250CA	1/2"	40-250 ft. lbs.	5.0 ft. lbs.	21 7/16	Flex-Head
WSC-400CA	3/4"	80-400 ft. lbs.	10.0 ft. lbs.	38 1/8	Fixed-Head
WSC-600CA	3/4"	200-600 ft. lbs.	10.0 ft. lbs.	48 1/2	Fixed-Head

Made in U.S.A.

CDI WSC-400CA and WSC-600CA Split Beam Torque Wrenches accept Williams Heavy Duty Tubular Wrenches that fit the 24TH handle. The length of the wrench heads matches the effective length of the ratchet head and extender that come with the torque wrench, creating the same effective length. Removing the ratchet head and extender from the torque wrench and inserting the desired Heavy Duty Tubular wrench of choice (fitting 24TH handle) creates an expanded use interchangeable head system. The complete assortment of Tubular Handle Wrenches is found on pages 130 and 131.

CDI TORQUE PRODUCTS

FLEX-HEAD MICROMETER ADJUSTABLE TORQUE WRENCH

Flex-Head English Single Scale

Features

- Single scale, dual direction
- Positive lock with spring loaded pull down lock ring
- Fast, accurate and easy to set
- Easy-to-read laser marked scales
- Flex Head pivots 15 degrees in both directions
- Rugged for Industrial use
- Accuracy: ± 4% CW ± 6% CCW of indicated value, CW, from 20% to 100% of full scale
- Meets or exceeds ASME B107.14-2004, ISO 6789 standards
- Individually serialized with matching certificate of calibration traceable to N.I.S.T.

FLEX-HEAD MICROMETER ADJUSTABLE TORQUE WRENCH

Product Code	Torque Range	Sq. Drive	Incr.	A In.	B In.	C In.	D In.	Wt. Lbs.
802MFRFMHSS	10-80 ft. lb.	3/8"	0.5	16.60	1.25	1.15	0.90	2.500

Made in U.S.A.

*Note: 800NMIMH new dual pin "Z" receivers accept only dual pin interchangeable heads.

CDI TORQUE PRODUCTS

INTERCHANGEABLE HEAD TORQUE WRENCHES

These interchangeable torque wrenches are designed for use on production lines and other applications where a specific torque is required for repetitive operations.

Features

- Interchangeable heads permit ratcheting, fixed, or open end torquing capability with adjustable torque wrench bodies.
- A push of the locking pin provides quick-change action, with a wide range of head styles to choose from.
- Micrometer Type Adjustment-ensures fast, accurate settings and changes.
- *Part Number 800NMIMH has Dual Pin Release for added strength

INTERCHANGEABLE HEAD TORQUE WRENCHES

Product Code	Shank Size	Increments	Nm Torque Range	Ft. Lbs Torque Range
50NMIMH	J	0.5	10 - 50	7.4 - 44.2
100NMIMH	J	0.5	20 - 100	14.8 - 73.8
200NMIMH	Y	2	40 - 200	29.5 - 147.5
350NMIMH	X	2	70 - 350	44.3 - 250.8
800NMIMH*	Z	5	150 - 800	110.6 - 590
75MFIMHSS	J	0.5	N/A	5 - 75
150MFIMHSS	Y	1	N/A	20 - 150
250MFIMHSS	Y	1	N/A	30 - 250

USA Made in U.S.A.

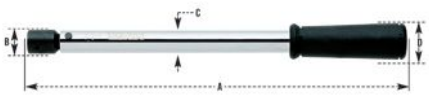

CDI TORQUE PRODUCTS

PRE-SET TORQUE WRENCHES

Pre-Set torque wrenches are designed for use on production lines and other applications where a specific torque is required for repetitive operations.

Features

- Featuring a durable, non-slip cushion grip
- Uses universal round shank heads
- Audible click and feel impulse torque control mechanism
- Tamper proof torque setting for production line use
- Accuracy: ± 4% of indicated value, in direction of torque indicator, from 20% to 100% of full scale
- Meets or exceeds ASME B107.14-2004, ISO 6789
- Calibration certificate available at additional cost

PRE-SET TORQUE WRENCHES

Product Code	English Range	Nm Range	Shank Size	A In.	B In.	C In.	D In.	Wt. Lbs.
5T-I	10 - 50 in.lb.	1.1 - 5.6 Nm	J	6.5	0.63	0.61	1	0.35
10T-I	50 - 250 in.lb.	5.6 - 28 Nm	J	10	0.63	0.61	1	0.55
10ST-I	60 - 300 in.lb.	6.8 - 34 Nm	J	6.2	0.68	0.86	1.4	0.75
50T-I	15 - 75 ft.lb.	20 - 102 Nm	J	11	0.68	0.86	1.4	1.4
100T-I	30 - 150 ft.lb.	41 - 203 Nm	Y	19.5	0.94	0.86	1.4	2.3
200T-I	40 - 200 ft.lb.	54 - 271 Nm	Y	23.5	0.94	0.86	1.4	2.6
300T-I	100 - 300 ft.lb.	135 - 406 Nm	X	27.7	1.12	1	1.4	3.9
600T-I*	120 - 600 ft.lb.	162 - 814 Nm	Z	55	1.5	1.25	1.25	10.45

*NOTE: No grip supplied.

USA Made in U.S.A.

CDI TORQUE PRODUCTS

RATCHETING SQUARE DRIVE HEADS - SAE

Square Drive (inches)	J (0.425")	Y (0.560")	X (0.735")	Z (0.990")	Z Dual Pins
¼	TCQJD8A-72				
⅜	TCQJD12A-80	TCQYD12A-80			
½	TCQJD16A	TCQYD16A	TCQXD16A		
¾			TCQXD24A	TCQZD24B	TCQZD24BDP
1			TCQXD32A	TCQZD32B	TCQZD32BDP

Z Shank Dual Pins

FIXED SQUARE DRIVE HEADS - SAE

Square Drive (inches)	J (0.425")	Y (0.560")	X (0.735")	Z (0.990")	Z Dual Pins
¼	TCQJSD8A				
⅜	TCQJSD12A	TCQYSD12A			
½	TCQJSD16A	TCQYSD16A	TCQXSD16A		
¾			TCQXSD24A	TCQZSD24A	TCQZSD24ADP
1			TCQXSD32A	TCQZSD32A	

Z Shank Dual Pins

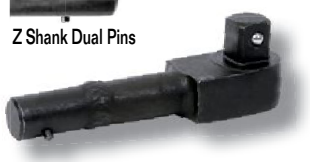

OPEN END HEADS - SAE

Square Drive (inches)	J (0.425")	Y (0.560")	X (0.735")	Z (0.990")	Z Dual Pins
¼	TCQJO8A				
5/16	TCQJO10A				
⅜	TCQJO12A				
7/16	TCQJO14A				
½	TCQJO16A				
9/16	TCQJO18A	TCQYO18A			
⅝	TCQJO20A	TCQYO20A			
11/16	TCQJO22A	TCQYO22A			
¾	TCQJO24A	TCQYO24A	TCQXO24A		
13/16	TCQJO26A	TCQYO26A	TCQXO26A		
⅞	TCQJO28A	TCQYO28A	TCQXO28A		
15/16	TCQJO30A	TCQYO30A	TCQXO30A		
1	TCQJO32A	TCQYO32A	TCQXO32A	TCQZO32A	TCQZO32ADP
1 1/16	TCQJO34A	TCQYO34A	TCQXO34A	TCQZO34A	
1⅛	TCQJO36A	TCQYO36A	TCQXO36A	TCQZO36A	TCQZO36ADP
1 3/16		TCQYO38A	TCQXO38A	TCQZO38A	TCQZO38ADP
1¼	TCQJO40A	TCQYO40A	TCQXO40A	TCQZO40A	TCQZO40ADP
1 5/16		TCQYO42A	TCQXO42A	TCQZO42A	
1⅜	TCQJO44A	TCQYO44A	TCQXO44A		TCQZO44ADP
1 7/16	TCQJO48A	TCQYO46A	TCQXO46A	TCQZO46A	TCQZO46ADP
1½		TCQYO48A	TCQXO48A	TCQZO48A	TCQZO48ADP
1 9/16		TCQYO50A	TCQXO50A	TCQZO50A	TCQZO50ADP
1⅝	TCQJO52A	TCQYO52A	TCQXO52A	TCQZO52A	TCQZO52ADP
1 11/16			TCQXO54A	TCQZO54A	TCQZO54ADP
1¾		TCQYO56A	TCQXO56A	TCQZO56A	TCQZO56ADP
1 13/16			TCQXO58A	TCQZO58A	TCQZO58ADP
1⅞		TCQYO60A	TCQXO60A	TCQZO60A	TCQZO60ADP
2			TCQXO64A	TCQZO64A	TCQZO64ADP
2 1/16				TCQZO66A	TCQZO66ADP
2⅛			TCQXO68A	TCQZO68A	TCQZO68ADP
2¼				TCQZO72A	TCQZO72ADP
2½				TCQZO80A	TCQZO76ADP
2¾				TCQZO88A	TCQZO80ADP
3				TCQZO96A	

Z Shank Dual Pins

Center of fastener to retaining pin:

TCQJ Series - 2.50"

TCQY Series - 3.00"

TCQX Series - 4.50"

TCQZ Series - 5.75"

Made in U.S.A.

CDI TORQUE PRODUCTS

OPEN END HEADS - METRIC

Z Shank Dual Pins

Square Drive (MM)	J (0.425")	Y (0.560")	X (0.735")	Z (0.990")	Z Dual Pins
6	TCQJOM6A				
7	TCQJOM7A				
8	TCQJOM8A				
9	TCQJOM9A				
10	TCQJOM10A				
11	TCQJOM11A				
12	TCQJOM12A				
13	TCQJOM13A				
14	TCQJOM14A	TCQYOM14A			
15	TCQJOM15A	TCQYOM15A			
16	TCQJOM16A	TCQYOM16A			
17	TCQJOM17A	TCQYOM17A	TCQXOM17A		
18	TCQJOM18A	TCQYOM18A	TCQXOM18A		
19	TCQJOM19A	TCQYOM19A	TCQXOM19A		
20		TCQYOM20A	TCQXOM20A		
21	TCQJOM21A	TCQYOM21A	TCQXOM21A		
22	TCQJOM22A	TCQYOM22A	TCQXOM22A		
23	TCQJOM23A	TCQYOM23A	TCQXOM23A		
24	TCQJOM24A	TCQYOM24A	TCQXOM24A	TCQZOM24A	TCQZOM24ADP
25	TCQJOM25A	TCQYOM25A	TCQXOM25A		
26	TCQJOM26A	TCQYOM26A	TCQXOM26A		
27	TCQJOM27A	TCQYOM27A	TCQXOM27A	TCQZOM27A	TCQZOM27ADP
29		TCQYOM29A	TCQXOM29A		
30		TCQYOM30A	TCQXOM30A	TCQZOM30A	TCQZOM30ADP
32		TCQYOM32A		TCQZOM32A	TCQZOM32ADP
34		TCQYOM34A			TCQZOM34ADP
36		TCQYOM36A	TCQXOM36A		TCQZOM36ADP
38					TCQZOM38ADP
41					TCQZOM41ADP
46					TCQZOM46ADP
50				TCQZOM50A	TCQZOM50ADP
55				TCQZOM55A	TCQZOM55ADP
60					TCQZOM60ADP
65					TCQZOM65ADP
70					TCQZOM70ADP

RATCHETING OPEN END HEADS - SAE

Size (inches)	J (0.425")
3/8	TCQJRO12A
7/16	TCQJRO14A
1/2	TCQJRO16A
9/16	TCQJRO18A
5/8	TCQJRO20A

RATCHETING OPEN END HEADS - METRIC

Size (MM)	J (0.425")
12	TCQJROM12A
13	TCQJROM13A
14	TCQJROM14A
15	TCQJROM15A
17	TCQJROM17A

OPEN END THIN HEADS - SAE

Size (inches)	J (0.425")	Y (0.560")
11/16	TCQJ022ARTH60	
1	TCQJ032ARTH	
1 1/16	TCQJ034ARTH	
1 1/8	TCQJ036ARTH	
1 3/16	TCQJ038ARTH	
1 3/8	TCQJ044ARTH	
1 1/2	TCQJ048ARTH	
1 9/16	TCQJ050ARTH	
1 5/8	TCQJ052ARTH	TCQY052ARTH
1 3/4		TCQY056ARTH
1 7/8		TCQY060ARTH
2 1/8		TCQY068ARTH

Made in U.S.A.

CDI TORQUE PRODUCTS

12-POINT BOX END 0° OFFSET - SAE

Size (inches)	J (0.425")	Y (0.560")
3/8	TCQJXD12A	
7/16	TCQJXD14A	
1/2	TCQJXD16A	
9/16	TCQJXD18A	
5/8		TCQYXD20A
11/16	TCQJXD22A	
3/4	TCQJXD24A	TCQYXD24A
15/16		TCQYXD30A

12-POINT BOX END 10° OFFSET - SAE

Size (inches)	J (0.425")	Y (0.560")	X (0.735")
1/2	TCQJXB16A		
9/16	TCQJXB18A		
5/8	TCQJXB20A		
11/16	TCQJXB22A		
3/4	TCQJXB24A	TCQYXB24A	
15/16		TCQYXB30A	
1		TCQYXB32A	
1 1/8		TCQYXB36A	
1 3/8			TCQXXB44A
1 1/2			TCQXXB48A

12-POINT BOX END 10° OFFSET - METRIC

Size (MM)	J (0.425")	Y (0.560")
13	TCQJXBM13A	
16	TCQJXBM16A	
18	TCQJXBM18A	TCQYXBM18A
19	TCQJXBM19	
24		TCQYXBM24A

12-POINT BOX END 0° OFFSET - METRIC

Square Drive (MM)	J (0.425")	Y (0.560")	X (0.735")	Z (0.990")	Z Dual Pins
6	TCQJXM6A				
7	TCQJXM7A				
8	TCQJXM8A				
9	TCQJXM9A				
10	TCQJXM10A				
11	TCQJXM11A				
12	TCQJXM12A				
13	TCQJXM13A				
14	TCQJXM14A	TCQYXM14A			
15	TCQJXM15A	TCQYXM15A			
16	TCQJXM16A	TCQYXM16A			
17	TCQJXM17A	TCQYXM17A	TCQXXM17A		
18	TCQJXM18A	TCQYXM18A	TCQXXM18A		
19	TCQJXM19A	TCQYXM19A	TCQXXM19A		
20	TCQJXM20A	TCQYXM20A	TCQXXM20A		
21	TCQJXM21A	TCQYXM21A	TCQXXM21A		
22	TCQJXM22A	TCQYXM22A	TCQXXM22A		
23	TCQJXM23A	TCQYXM23A	TCQXXM23A		
24	TCQJXM24A	TCQYXM24A	TCQXXM24A	TCQZXM24A	TCQZXM24ADP
25	TCQJXM25A	TCQYXM25A	TCQXXM25A	TCQZXM25A	
26	TCQJXM26A	TCQYXM26A		TCQZXM26A	
27	TCQJXM27A	TCQYXM27A	TCQXXM27A	TCQZXM27A	TCQZXM27ADP
29		TCQYXM29A		TCQZXM29A	
30		TCQYXM30A	TCQXXM30A	TCQZXM30A	TCQZXM30ADP
32		TCQYXM32A	TCQXXM32A	TCQZXM32A	TCQZXM32ADP
34			TCQXXM34A	TCQZXM34A	TCQZXM34ADP
36		TCQYXM36A	TCQXXM36A	TCQZXM36A	TCQZXM36ADP
41					TCQZXM41ADP
46					TCQZXM46ADP
50					TCQZXM50ADP
55					TCQZXM55ADP
60					TCQZXM60ADP

Z Shank Dual Pins

Made in U.S.A.

Z Shank Dual Pins

12 POINT RATCHET WRENCH HEADS - METRIC

Size (MM)	J (0.425")
16	TCQJBOERM16
18	TCQJBOERM18

12 POINT RATCHET WRENCH HEADS - SAE

Size (inches)	J (0.425")
3/8	TCQJBOER12
7/16	TCQJBOER14
1/2	TCQJBOER16
9/16	TCQJBOER18
5/8	TCQJBOER20
11/16	TCQJBOER24

12 POINT FLARE NUT HEADS - SAE

Size (inches)	J (0.425")	Y (0.560")
9/16	TCQJRX18A	TCQYRX18A
5/8	TCQJRX20A	TCQYRX20A
11/16	TCQJRX22A	TCQYRX22A
3/4	TCQJRX24A	TCQYRX24A
13/16	TCQJRX26A	TCQYRX26A
7/8	TCQJRX28A	TCQYRX28A
15/16	TCQJRX30A	TCQYRX30A
1	TCQJRX32A	TCQYRX32A
1 1/16		TCQYRX34A
1 1/8		TCQYRX36A
1 3/16		TCQYRX38A
1 1/4		TCQYRX40A

CDI TORQUE PRODUCTS

12-POINT BOX END HEADS - SAE

Square Drive (inches)	J (0.425")	Y (0.560")	X (0.735")	Z (0.990")	Z Dual Pins
1/4	TCQJX8A				
9/32	TCQJX9A				
5/16					
3/8	TCQJX12A				
7/16	TCQJX14A				
1/2	TCQJX16A	TCQYX16A			
9/16	TCQJX18A	TCQYX18A			
5/8	TCQJX20A	TCQYX20A			
11/16	TCQJX22A	TCQYX22A			
3/4	TCQJX24A	TCQYX24A	TCQXX24A		
13/16	TCQJX26A	TCQYX26A	TCQXX26A		TCQZX26ADP
7/8	TCQJX28A	TCQYX28A	TCQXX28A		
15/16	TCQJX30A	TCQYX30A	TCQXX30A		
1	TCQJX32A	TCQYX32A	TCQXX32A		
1 1/16	TCQJX34A	TCQYX34A	TCQXX34A	TCQZX34A	TCQZX34ADP
1 1/8			TCQXX36A	TCQZX36A	TCQZX36ADP
1 3/16		TCQYX38A	TCQXX38A	TCQZX38A	TCQZX38ADP
1 1/4		TCQYX40A	TCQXX40A	TCQZX40A	TCQZX40ADP
1 5/16		TCQYX42A	TCQXX42A	TCQZX42A	TCQZX42ADP
1 3/8			TCQXX44A		
1 7/16		TCQYX46A	TCQXX46A	TCQZX46A	TCQZX46ADP
1 1/2		TCQYX48A	TCQXX48A	TCQZX48A	TCQZX48ADP
1 9/16		TCQYX50A	TCQXX50A	TCQZX50A	TCQZX50ADP
1 5/8		TCQYX52A	TCQXX52A	TCQZX52A	TCQZX52ADP
1 11/16			TCQXX54A		TCQZX54ADP
1 3/4			TCQXX56A	TCQZX56A	TCQZX56ADP
1 13/16			TCQXX58A	TCQZX58A	TCQZX58ADP
1 7/8			TCQXX60A	TCQZX60A	TCQZX60ADP
2			TCQXX64A	TCQZX64A	TCQZX64ADP
2 1/16				TCQZX66A	TCQZX66ADP
2 1/8				TCQZX68A	TCQZX68ADP
2 3/16					TCQZX70ADP
2 1/4				TCQZX72A	TCQZX72ADP
2 3/8					TCQZX76ADP
2 1/2				TCQZX80A	TCQZX80ADP

6 POINT FLARE NUT HEADS - METRIC

Size (MM)	J (0.425")	Y (0.560")
10	TCQJRXSM10A	
11	TCQJRXSM11A	
12	TCQJRXSM12A	
13	TCQJRXSM13A	
14	TCQJRXSM14A	
16		TCQYRXSM16A
17	TCQJRXSM17A	TCQYRXSM17A
18		TCQYRXSM18A
19		TCQYRXSM19A
20		TCQYRXSM20A
21		TCQYRXSM21A

6 POINT FLARE NUT HEADS - SAE

Size (inches)	J (0.425")	Y (0.560")
5/16	TCQJRXS10A	
3/8	TCQJRXS12A	
7/16	TCQJRXS14A	
1/2	TCQJRXS16A	
9/16	TCQJRXS18A	
5/8		TCQYRXS20A
11/16	TCQJRXS22A	TCQYRXS22A
3/4	TCQJRXS24A	TCQYRXS24A
13/16		TCQYRXS26A
7/8		TCQYRXS28A
15/16	TCQJRXS30A	TCQYRXS30A
1		TCQYRXS32A
1 1/8		TCQYRXS36A

Made in U.S.A.

WILLIAMS®

TORQUE MULTIPLIERS WITH HANDLES

Features

- Provides the operator with nut-turning power that requires only a fraction of the force required when using conventional tools.
- Input and output rotation is in the same direction.
- Reaction bar rotation is opposite to input direction and must rest securely against a rigid object to withstand the generated reaction force.
- By removing 4 screws, heads may be easily disassembled for inspection, cleaning and lubrication.

TORQUE MULTIPLIERS WITH HANDLES

Product Code	Max Output Ft. Lbs.	Multiplication Ratio*	Approx. Ft. Lbs. Rq'd for Max Output	Input Female Sq.	Output Male Sq.	Head Thickness Inc. Tang	Head Diam.	Oal. Lgth. Inc. Reaction Bar
TM-750LW	1000	3.6 to 1	275	1/2	3/4	3 9/32	3 1/2	22 1/2
TM-1000	2000	3.6 to 1	550	3/4	1	4 3/8	3 17/32	24
TM-1500	4000	3.9 to 1	1150	1	1 1/2	6 1/8	5 3/16	28 7/8
TM-2000	8000	4.6 to 1	1915	1	1 1/2	6 1/4	6 1/2	31
TM-2500	12000	5.4 to 1	2200	1	2 1/2	7 1/4	7 1/4	30

* Multipliers are mechanical devices which have frictional losses. A 10% factor was included in the multiplication ratio. For higher accuracy of multiplication ratio, output of unit should be checked on torque tester.

USA Made in U.S.A.

WILLIAMS®

TORQUE MULTIPLIERS WITH PLANETARY-GEAR MECHANISM

Features

- Designed where high torques are necessary for fastening or breaking out stubborn fasteners.
- Allows operator safe and easy means of producing torque for job requirements.
- Precision planetary gear multiplies the operator's input from standard torque wrenches.
- Can also multiply the torque from air-driven (non-impact) wrenches.

TORQUE MULTIPLIERS WITH PLANETARY-GEAR MECHANISM

Product Code	Max Output Ft. Lbs.	Input Cap	Gear Ratio	Torque Ratio	Input Female Sq.	Output Sq. Size	Overall Length	Head Height Sq. to Top	Head Dia.
TM-290	750	227	4:1	3:3:1	1/2	3/4	8 1/2	3 1/4	2 13/16
TM-391	1200	200	6:3:1	6:0:1	1/2	3/4	19 39/64	4	3 15/16
TM-392	2200	162	15:0:1	13:6:1	1/2	1	19 39/64	5 3/4	4 1/16
TM-393	3200	173	20:25:1	18:5:1	1/2	1	19 39/64	6 1/2	4 1/16
TM-394	5000	189	29:25:1	26:5:1	1/2	1 1/2	14 29/32	8 3/4	5 5/8
TM-395	8000	154	60:1	52:0:1	1/2	1 1/2	15 13/64	10 3/4	5 13/16

USA Made in U.S.A.

WILLIAMS®

PLATE REACTION TORQUE MULTIPLIERS

Features

- Input torque holding ratchet - holds multiplier in place during torquing.
- Needle bearing construction for high efficiency.
- Standard reaction plate meets most job applications.
- Shearable output squares - to protect tool during overload.
- ½" drive square female input.

PLATE REACTION TORQUE MULTIPLIERS

Product Code	Max Output Ft. Lbs.	Input Cap	Gear Ratio	Torque Ratio	Output Male Sq.	Overall Length	Head Height	Head Dia.
TM-492	2200	162	15:1	13:6:1	1	14	5 ½	4 ⅞
TM-493	3200	173	20:25:1	18:5:1	1	14	6 7/16	4 ⅞

Made in U.S.A.

WILLIAMS®

REPLACEMENT SQUARE DRIVES FOR TORQUE MULTIPLIERS

Replacement square drives for planetary-gear and plate reaction torque multipliers.

REPLACEMENT SQUARE DRIVES FOR TORQUE MULTIPLIERS

Product Code	Description
TM-391RSD	Repl. Sq Drive For TM-391
TM-392RSD	Repl. Sq Drive For TM-392 and TM-492
TM-393RSD	Repl. Sq Drive For TM-393 and TM-493
TM-394RSD	Repl. Sq Drive For TM-394
TM-395RSD	Repl. Sq Drive For TM-395

Made in U.S.A.

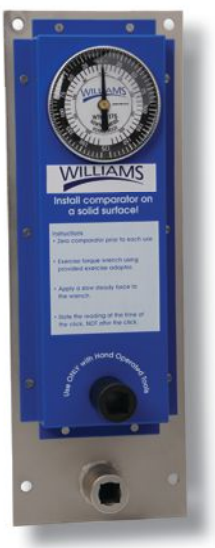

WILLIAMS®

TORQUE COMPARATOR

Large dual scale. Perfect when a quick check of your wrench is required before usage. Compact design allows for mounting on any flat surface in either horizontal or vertical position. Torque Comparator is calibrated on torque testers wich are certified using test bars and "F" weights traceable to NIST. +/- 2% accuracy from 20% of full scale to full scale. Calibration Compliance Certificate.

TORQUE COMPARATOR

Product Code	Square Drive	English Capacity	Inc.	Nm, Capacity	Inc.
1753-TC	½"	175 ft. lbs.	5 ft. lbs.	230 Nm	10 Nm
6004-TC	¾"	600 ft. lbs.	5 ft. lbs.	800 Nm	20 Nm

Made in U.S.A.

WHY IS TORQUE CRITICAL?

KNOWLEDGE IS KEY

These illustrations explain why torque instruments are critical to the application of the correct amount of load or tension to threaded fasteners. Original Equipment Manufacturers specify the amount of torque that is applied to fasteners to ensure they maintain the proper load within operating conditions.

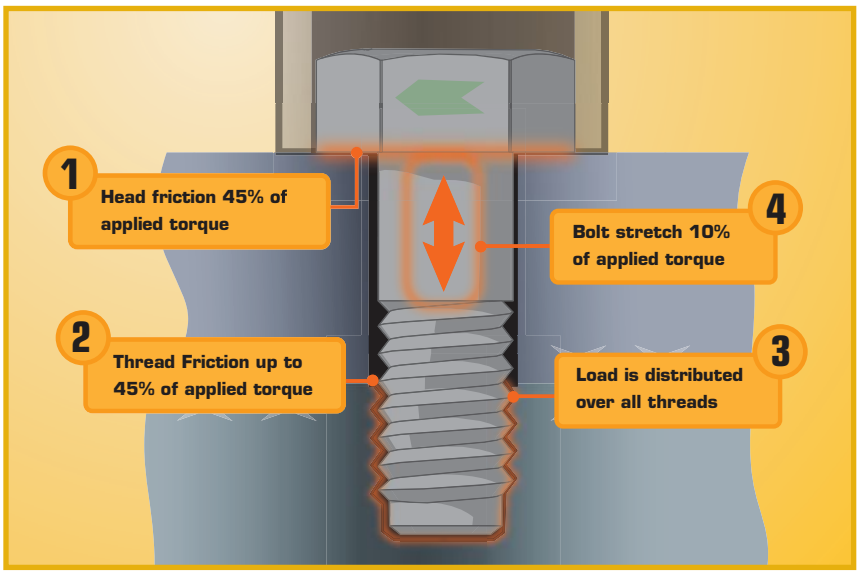

A properly torqued fastener will remain tight during all loads and vibration. A poorly torqued fastener can fail quickly from fatigue creating a potentially unsafe situation. Many technicians don't realize the importance of tightening a fastener to a specified torque value or literally what is actually occurring with the fastener while torque is being applied.

A fastener that is stretched (preloaded) to it's designed level of residual stress will resist failure for the given cycle load and the maximum number of fatigue cycles it was designed for. It will also provide maximum resistance to loosening from vibration.

A fastener installed in an under-stressed condition will loosen under load and ultimately fail by loss of clamping force. A fastener that is over tightened will fail during installation or fail prematurely during under cycle stress.

CDI Torque Products provides professional technicians the largest selection of high-quality torque tools in the market today. Whether looking for a traditional click-type wrench or something cutting edge like the Computorq 3 wrench, CDI Torque Products has all of the torque wrench, sizes and styles to fill your needs. Our products have earned a reputation for superior performance and reliability in shops and factories worldwide that deliver.

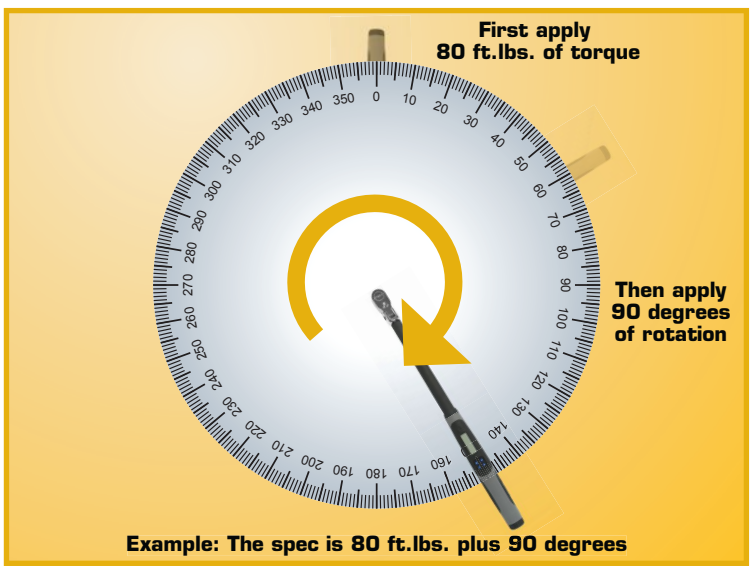

TORQUE WRENCH SAFETY

These precautions should always be taken when using any torque wrench to avoid possible injury:

- Read instruction manual completely before using torque wrench.
- Safety glasses or goggles should be worn at all times when using any hand tool.
- Always pull, DO NOT PUSH, to apply torque and adjust your stance to prevent a fall.
- A "cheater bar" should NEVER be used on a torque wrench to apply excess leverage.
- Do not use with sockets or fasteners showing wear or cracks.
- Ratchet mechanism may slip or break if dirty, mismatched or worn parts are used.
- Make sure direction lever is fully engaged

TORQUE WRENCH USAGE

- All mechanical torque wrenches are calibrated from 20% to 100% of full scale, therefore, they should never be used below or above those limits
- To determine which torque wrench capacity is best suited for an application, many factors must be considered. However, as a recommendation, use a torque wrench in the middle 50% of the overall capacity of the tool. This will result in longer tool life, ease of use for the operator and increased accuracy from "clicker" type torque wrenches
- Always grasp handle firmly in the center of the grip
- Approach final torque slowly and evenly
- Stop pulling wrench immediately when target torque is reached
- Never use a torque wrench to break fasteners loose
- Should be cleaned and stored properly
- Should always be stored at it's lowest torque setting
- Wrenches should be re-calibrated if dropped. Should never be used in excess of it's capacity
- Torque wrenches should be "exercised" a minimum of three times at 100% of full scale before use
- The wrench selected should be calibrated in the same torque units that are specified
- Use of a "cheater bar" will result in an inaccurate reading and can possibly damage the wrench
- Torque wrenches will last longer if reasonable care is taken. Always unwind handle to the lowest setting after each use. Do not attempt to lubricate the internal torque mechanism. Clean torque wrench by wiping, do not immerse. The wrench should be sent to a qualified calibration lab once every year or every 5000 cycles for re-calibration

COMMON TORQUE ABBREVIATIONS

Foot Pounds – ft. lbs.
Inch Pounds – in. lbs.
Inch Ounces – in. ozs.
Newton Meter – Nm
Centi-Newton Meter – cNm
Meter Kilogram – Mkg

EASY-TO-USE TORQUE CONVERSION TABLE

To Convert From	To	Multiply by
in. oz.	in. lb.	0.0625
in. lb.	in.oz.	16
in. lb.	ft.lb.	0.08333
in. lb.	cmkg	1.1519
in. lb.	mkg	0.011519
in. lb.	Nm	0.113
in. lb.	dNm	1.13
ft. lb.	in. lb.	12
ft. lb.	mkg	0.1382
ft. lb.	Nm	1.356
dNm	in. lb.	0.885
dNm	Nm	0.10
Nm	dNm	10
Nm	cmkg	10.2
Nm	mkg	0.102
Nm	in. lb.	8.85
Nm	ft. lb.	0.7376
cmkg	in. lb.	0.8681
cmkg	Nm	0.09807
mkg	in. lb.	86.81
mkg	ft. lb.	7.236
mkg	Nm	9.807

REPAIR & SERVICE CENTER

For over 30 years the CDI Repair and Service Center has been providing quality torque tool repair and calibration services performed by highly trained technicians. CDI Torque Products is a premier torque wrench and torque calibration equipment manufacturer that has been ISO 9001 certified since 1998. Mechanical torque tools and electronic torque equipment are designed, built and serviced in our City of Industry, California facility. CDI's mechanical and electronic torque tools are repaired and calibrated with N.I.S.T. (National Institute of Standards and Technology) traceable calibration equipment.
CDI Torque Products meets or exceeds ASME and ISO standards.
All of CDI's primary torque wrench calibration equipment used in manufacturing and repair are calibrated on a monthly basis — that's twelve times
a year!!

In addition to repair and calibration services, CDI offers training in several areas. Technical training is available at our facility for any CDI manufactured torque calibration system. Training in mechanical and electronic torque wrench repair, torque theory, torque basics and safety training is also available.

All electronic torque checking, testing and calibration equipment sent to CDI for servicing is returned to factory standards and a certificate of calibration is provided at no extra cost. Rely on the CDI Repair and Service Center to do the job right the first time.

CDI TORQUE PRODUCTS
ISO 9001 Certified

MECHANICAL AND ELECTRONIC TORQUE PRODUCTS FULL 12-MONTH WARRANTY

SNAP-ON INDUSTRIAL BRANDS WARRANTS TO THE ORIGINAL PURCHASER OF TORQUE PRODUCTS THAT THE COMPANY'S TORQUE PRODUCTS ARE FREE FROM DEFECTS IN WORKMANSHIP AND MATERIALS. SNAP-ON INDUSTRIAL BRANDS will repair or replace torque products which fail to give satisfactory service due to defective workmanship or materials (excluding calibration) for 12 months from the date of original purchase. SNAP-ON INDUSTRIAL BRANDS warrants "initial, out of box calibration" of each new, unused torque product. Repair, replacement or recalibration shall be at the election and expense of SNAP-ON INDUSTRIAL BRANDS, and is your exclusive remedy in place of all other rights and remedies. Products must be returned with proof of purchase, freight prepaid, to a SNAP-ON INDUSTRIAL BRANDS repair center for warranty service. SNAP-ON INDUSTRIAL BRANDS does not provide any warranty for products subjected to abnormal use. Abnormal use includes misuse, accident, modification, unreasonable use, neglect, lack of maintenance, or use after the tool is significantly worn.

"NO OTHER WARRANTIES, EXPRESS, IMPLIED OR STATUTORY, INCLUDING WITHOUT LIMITATION ANY IMPLIED WARRANTY OF MERCHANTABILITY OR FITNESS FOR A PARTICULAR PURPOSE, SHALL APPLY, AND ALL SUCH WARRANTIES ARE HEREBY EXPRESSLY EXCLUDED."

In no event shall Seller be liable to Buyer or anyone claiming through or against Buyer for any special, indirect or consequential damages (including, without limitation, lost profits, revenues, anticipated sales, business opportunities or goodwill; interruption of business; or loss of business information).

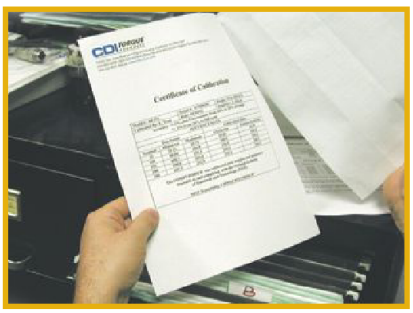

Wrenches

Wrenches

Supercombo® Wrenches

- Open End: SUPERCOMBO® open end has specially designed grooves that contact fasteners on the flats and direct force away from corners, eliminating corner rounding. A 45˚ chamfer on the jaw tips allow for easy fastener insertion.
- Handle: Round edge profiles eliminate sharp edges, providing a more comfortable grip to apply more force. Large stamp size in the handle allows for quick and easy identification.
- Box End: SUPERTORQUE® lobular box design prevents rounding of the nuts and bolt heads by providing “no contact” clearance of the corners while applying all of the wrenching force (torque) on the flat surfaces behind the corner points. Box end chamfer is designed for quick, positive placement on the fastener.

Unique Tubular Handle Wrenches

- Wrenches may be used without the handle to quickly run down nuts. The handle can then be slipped on for final tightening or to reach otherwise inaccessible nuts.
- A “stop” on the wrench shaft helps to align locking button with handle hole.
- Offset box design provides turning clearance for hands above work surface.
- Continuous arc design distributes stress over the entire wrench opening radius for greater strength.
- Available in 3 styles — offset box, straight box and open end.
- Interchangeable handle lengths — 13", 24" and 36".
- Large size ranges from ¾" to 3 ⅛" (depending upon style).

Adjustable Wrenches

- J. P. Johansson, founder of Bahco, invented the adjustable wrench which is now found all over the world. Bahco alone has produced more than 100 million adjustables.
- Snap-on Industrial Brands offers the largest variety of adjustable wrenches in the industry: ergonomically designed, Big Mouth, combination adjustable pipe wrench, construction; chrome and black finish, comfort grip and standard handles.
- All models thru 18" feature measurement scale on head that conveniently shows fastener size.

Ratcheting Combination Wrenches

- High-polished chrome finish cleans easily.
- Ratchet lever is easily accessible for quick direction changes.
- SUPERTORQUE® corners on box ends provide extra turning power.
- Available in Standard, Flex-Head and Stubby styles to suit every need.
- Fine tooth design with dual-pawl mechanism for extra strength.
- Flex-Head models feature 90 degree pivot in either direction.
- Stubby models feature extra short handles for access in tight areas.

WILLIAMS®

12 F

SUPERCOMBO® COMBINATION WRENCHES

High Polish Chrome and Satin Chrome Finish, 12 Point, SAE

Product Code	Size (Inches)	A Overall Length (Inches)	B Open End Width (Inches)	C Open End Thickness (Inches)	D Box End Diameter (Inches)	E Box End Thickness (Inches)
1208SC +	1/4	4 1/4	9/16	1/8	13/32	3/16
1210SC +	5/16	5 3/4	11/16	5/32	1/2	7/32
1211SC +	11/32	6 1/4	3/4	3/16	9/16	1/4
1212SC ++	3/8	6 1/2	13/16	3/16	9/16	1/4
1214SC ++	7/16	7 1/4	15/16	7/32	11/16	9/32
1216SC ++	1/2	8	1 1/16	1/4	3/4	11/32
1218SC ++	9/16	8 3/4	1 1/4	1/4	7/8	3/8
1220SC ++	5/8	9 1/2	1 3/8	9/32	15/16	13/32
1222SC ++	11/16	10 1/4	1 1/2	5/16	1 1/32	7/16
1224SC ++	3/4	11	1 5/8	5/16	1 1/8	1/2
1226SC ++	13/16	11 3/4	1 3/4	3/8	1 7/32	17/32
1228SC ++	7/8	12 1/2	1 7/8	13/32	1 5/16	9/16
1230SC ++	15/16	13 1/4	2	7/16	1 3/8	19/32
1232SC ++	1	14	2 1/8	15/32	1 15/32	5/8
1234SC ++	1 1/16	14 3/4	2 1/4	1/2	1 9/16	21/32
1236SC ++	1 1/8	15 1/2	2 13/32	17/32	1 21/32	11/16
1238SC ++	1 3/16	16 1/4	2 17/32	17/32	1 23/32	3/4
1240SC ++	1 1/4	17	2 21/32	9/16	1 13/16	3/4
1242 **	1 5/16	17 3/4	2 13/16	19/32	1 29/32	3/4
1244 **	1 3/8	18 1/2	2 15/16	5/8	2	3/4
1246 **	1 7/16	19 1/4	3 1/16	5/8	2 3/32	7/8
1248 **	1 1/2	20 1/32	3 3/16	11/16	2 3/16	7/8
1178A **	1 9/16	20 25/32	3 3/16	21/32	2 1/4	7/8
1180 **	1 5/8	21 1/2	3 5/16	11/16	2 11/32	7/8
1182 **	1 11/16	22 9/32	3 7/16	23/32	2 7/16	7/8
1184 **	1 3/4	22 7/8	3 9/16	23/32	2 17/32	1 1/32
1186 **	1 13/16	23 15/32	3 11/16	3/4	2 5/8	1 1/32
1188 **	1 7/8	24 1/32	3 13/16	25/32	2 23/32	1 1/32
1190 **	2	25 1/4	4 1/16	27/32	2 7/8	1 1/32
1191 **	2 1/16	25 13/16	4 3/16	27/32	2 31/32	1 5/32
1192 **	2 1/8	26 3/8	4 5/16	7/8	3 1/16	1 5/32
1193 **	2 3/16	26 31/32	4 7/16	29/32	3 5/32	1 5/32
1194 **	2 1/4	27 9/16	4 9/16	15/16	3 7/32	1 5/32
1195 **	2 3/8	28 3/4	4 13/16	31/32	3 13/32	1 9/32
1197 **	2 1/2	29 29/32	5 1/16	1 1/32	3 19/32	1 9/32
1198 *	2 5/8	32	6 5/8	1 7/32	4 7/8	1 5/8
1198A *	2 3/4	32	6 5/8	1 7/32	4 7/8	1 5/8
1198B *	2 7/8	32	6 5/8	1 7/32	4 7/8	1 5/8
1198C *	2 15/16	32	6 5/8	1 7/32	4 7/8	1 5/8
1199 *	3	32	6 5/8	1 7/32	4 7/8	1 5/8
1199A *	3 1/8	32	6 5/8	1 7/32	4 7/8	1 5/8
1199B *	3 3/8	31 3/8	6 5/8	1 7/32	4 7/8	1 5/8
1199C *	3 1/2	31 29/32	6 5/8	1 7/32	4 7/8	1 5/8

+ High Polish Chrome Finish with SUPERTORQUE® Box End.
++ High Polish Chrome Finish with SUPERCOMBO® Open End and SUPERTORQUE® Box End.
** Satin Chrome Finish with SUPERTORQUE® Box End and Standard Open End.
* Satin Chrome Finish with Standard Open and Box Ends.
Fed. Spec.: ANSI B107.6; SAE AS 954

USA Made in U.S.A.

Features

- SUPERCOMBO® open end has specially designed grooves that direct wrench force away from fastener corners.
- SUPERTORQUE® box opening design allows application of higher torque without rounding or deforming hex fastener points. No contact is made at the corners. Instead, wrenching forces are placed on the flat surfaces behind the points.
- Meets or exceeds aerospace specification AS 954 for 12 point fasteners (as defined by AS 870) to provide accurate torque/tension relationship for precision application.
- May be used on all common hex (6 point) fasteners with considerable advantage over conventional box end wrenches to increase both hand tool flexibility and economy.
- Box and open end openings are identical.

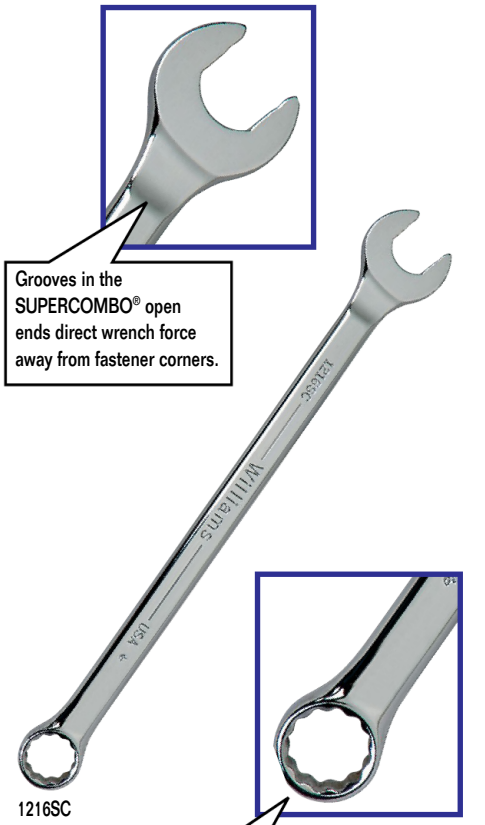

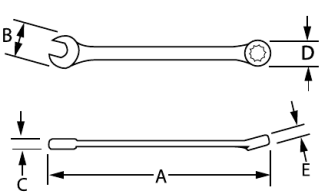

WS-1170SCA

WS-1171SCA

WS-1175

WILLIAMS®

SUPERCOMBO® WRENCH SETS

High Polish Chrome and Satin Chrome Finish, 12 Point, SAE
Set Contents:

Product Code	Size (Inches)	WS-1170SCA 7-Piece Set in Roll Pouch	WS-1171SCA 11-Piece Set in Roll Pouch	WS-1172SCA 15-Piece Set in Roll Pouch	WS-1190SCA 26-Piece Set	WS-1174TA 10-Piece Set	WS-1175 6-Piece Set
1208SC	1/4				X		
1210SC	5/16			X	X		
1212SC	3/8	X	X	X	X		
1214SC	7/16	X	X	X	X		
1216SC	1/2	X	X	X	X		
1218SC	9/16	X	X	X	X		
1220SC	5/8	X	X	X	X		
1222SC	11/16	X	X	X	X		
1224SC	3/4	X	X	X	X		
1226SC	13/16		X	X	X		
1228SC	7/8		X	X	X		
1230SC	15/16		X	X	X		
1232SC	1		X	X	X		
1234SC	1 1/16			X	X		
1236SC	1 1/8			X	X		
1240SC	1 1/4			X	X		
1242	1 5/16				X	X	
1244	1 3/8				X	X	
1246	1 7/16				X	X	
1248	1 1/2				X	X	
1180	1 5/8				X	X	
1182	1 11/16				X	X	
1184	1 3/4				X	X	
1186	1 13/16				X	X	
1188	1 7/8				X	X	
1190	2				X	X	
1191	2 1/16						X
1192	2 1/8						X
1193	2 3/16						X
1194	2 1/4						X
1195	2 3/8						X
1197	2 1/2						X
Roll Pouch		R-42	R-41	R-37			

Made in U.S.A.

WS-1174TA

WS-1172SCA

WS-1190SCA

WILLIAMS®

SUPERCOMBO® COMBINATION WRENCHES

Black Industrial Finish, 12 Point, SAE

Product Code	Size (Inches)	A Overall Length (Inches)	B Open End Width (Inches)	C Open End Thickness (Inches)	D Box End Diameter (Inches)	E Box End Thickness (Inches)
1210BSC +	5/16	5 3/4	11/16	5/32	1/2	7/32
1212BSC ++	3/8	6 1/2	13/16	3/16	9/16	1/4
1214BSC ++	7/16	7 1/4	15/16	7/32	11/16	9/32
1216BSC ++	1/2	8	1 1/16	1/4	3/4	11/32
1218BSC ++	9/16	8 3/4	1 1/4	1/4	7/8	3/8
1220BSC ++	5/8	9 1/2	1 3/8	9/32	15/16	13/32
1222BSC ++	11/16	10 1/4	1 1/2	5/16	1 1/32	7/16
1224BSC ++	3/4	11	1 5/8	5/16	1 1/8	1/2
1226BSC ++	13/16	11 3/4	1 3/4	3/8	1 7/32	17/32
1228BSC ++	7/8	12 1/2	1 7/8	13/32	1 5/16	9/16
1230BSC ++	15/16	13 1/4	2	7/16	1 3/8	19/32
1232BSC ++	1	14	2 1/8	15/32	1 15/32	5/8
1234BSC ++	1 1/16	14 3/4	2 1/4	1/2	1 9/16	21/32
1236BSC ++	1 1/8	15 1/2	2 13/32	17/32	1 21/32	11/16
1240BSC ++	1 1/4	17	2 21/32	9/16	1 13/16	3/4
1242B **	1 5/16	17 3/4	2 13/16	19/32	1 29/32	3/4
1244B **	1 3/8	18 1/2	2 15/16	5/8	2	3/4
1246B **	1 7/16	19 1/4	3 1/16	5/8	2 3/32	7/8
1248B **	1 1/2	20 1/32	3 3/16	11/16	2 3/16	7/8
1178AB **	1 9/16	20 25/32	3 3/16	21/32	2 1/4	7/8
1180B **	1 5/8	21 1/2	3 5/16	11/16	2 11/32	7/8
1182B **	1 11/16	22 9/32	3 7/16	23/32	2 7/16	7/8
1184B **	1 3/4	22 7/8	3 9/16	23/32	2 17/32	1 1/32
1186B **	1 13/16	23 15/32	3 11/16	3/4	2 5/8	1 1/32
1188B **	1 7/8	24 1/32	3 13/16	25/32	2 23/32	1 1/32
1190B **	2	25 1/4	4 1/16	27/32	2 7/8	1 1/32
1191B **	2 1/16	25 13/16	4 3/16	27/32	2 31/32	1 5/32
1192B **	2 1/8	26 3/8	4 5/16	7/8	3 1/16	1 5/32
1193B **	2 3/16	26 31/32	4 7/16	29/32	3 5/32	1 5/32
1194B **	2 1/4	27 9/16	4 9/16	15/16	3 7/32	1 5/32
1195B **	2 3/8	28 3/4	4 13/16	31/32	3 13/32	1 9/32
1197B **	2 1/2	29 29/32	5 1/16	1 1/32	3 19/32	1 9/32
1198BL *	2 5/8	32	6 5/8	1 7/32	4 7/8	1 5/8
1198ABL *	2 3/4	32	6 5/8	1 7/32	4 7/8	1 5/8
1198BBL *	2 7/8	32	6 5/8	1 7/32	4 7/8	1 5/8
1198CBL *	2 15/16	32	6 5/8	1 7/32	4 7/8	1 5/8
1199BL *	3	32	6 5/8	1 7/32	4 7/8	1 5/8
1199ABL *	3 1/8	32	6 5/8	1 7/32	4 7/8	1 5/8
1199BBL *	3 3/8	31 29/32	6 5/8	1 7/32	4 7/8	1 5/8
1199CBL *	3 1/2	31 29/32	6 5/8	1 7/32	4 7/8	1 5/8

+ Black Industrial Finish with SUPERTORQUE® Box End
++ Black Industrial Finish with SUPERCOMBO® Open End and SUPERTORQUE® Box End
** Black Industrial Finish with SUPERTORQUE® Box End and standard open end
* Satin Chrome Finish with Standard Open and Box Ends
Fed. Spec.: ANSI B107.6; SAE AS 954

Made in U.S.A.

Features

- SUPERCOMBO® open end has specially designed grooves that direct wrench force away from fastener corners.
- SUPERTORQUE® box opening design allows application of higher torque without rounding or deforming hex fastener points. No contact is made at the corners. Instead, wrenching forces are placed on the flat surfaces behind the points.
- Meets or exceeds aerospace specification AS 954 for 12 point fasteners (as defined by AS 870) to provide accurate torque/tension relationship for precision application.
- May be used on all common hex (6 point) fasteners with considerable advantage over conventional box end wrenches to increase both hand tool flexibility and economy.
- Box and open end openings are identical.

Grooves in the SUPERCOMBO® open ends direct wrench force away from fastener corners.

1216BSC

SUPERTORQUE® box opening design allows higher torque without rounding or deforming fastener corners by placing wrenching forces on the flat surfaces rather than the points.

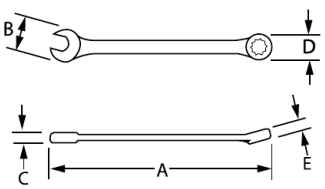

WS-1170BSC

WS-1171BSC

WS-1172BSC

WS-1190BSC

WILLIAMS®

SUPERCOMBO® WRENCH SETS

Black Industrial Finish, 12 Point, SAE
Set Contents

Product Code	Size (Inches)	WS-1170BSC 7-Piece Set in Roll Pouch	WS-1171BSC 11-Piece Set in Roll Pouch	WS-1172BSC 15-Piece Set in Roll Pouch	WS-1190BSC 26-Piece Set
1210BSC	5/16			X	X
1212BSC	3/8	X	X	X	X
1214BSC	7/16	X	X	X	X
1216BSC	1/2	X	X	X	X
1218BSC	9/16	X	X	X	X
1220BSC	5/8	X	X	X	X
1222BSC	11/16	X	X	X	X
1224BSC	3/4	X	X	X	X
1226BSC	13/16		X	X	X
1228BSC	7/8		X	X	X
1230BSC	15/16		X	X	X
1232BSC	1		X	X	X
1234BSC	1 1/16			X	X
1236BSC	1 1/8			X	X
1240BSC	1 1/4			X	X
1242B	1 5/16				X
1244B	1 3/8				X
1246B	1 7/16				X
1248B	1 1/2				X
1178AB	1 9/16				X
1180B	1 5/8				X
1182B	1 11/16				X
1184B	1 3/4				X
1186B	1 13/16				X
1188B	1 7/8				X
1190B	2				X
Roll Pouch		R-42	R-41	R-37	

Made in U.S.A.

WILLIAMS®

12 M

SUPERCOMBO® COMBINATION WRENCHES

High Polish Chrome Finish, 12 Point, Metric

Product Code	Size (MM)	A Overall Length (Inches)	B Open End Width (Inches)	C Open End Thickness (Inches)	D Box End Diameter (Inches)	E Box End Thickness (Inches)
1206MSC +	6	4 27/32	9/16	1/8	13/32	3/16
1207MSC ++	7	5 5/16	5/8	5/32	15/32	7/32
1208MSC ++	8	5 25/32	23/32	5/32	1/2	7/32
1209MSC ++	9	6 9/32	13/16	3/16	9/16	1/4
1210MSC ++	10	6 3/4	7/8	3/16	5/8	9/32
1211MSC ++	11	7 1/4	31/32	7/32	11/16	5/16
1212MSC ++	12	7 11/16	1 1/32	7/32	3/4	5/16
1213MSC ++	13	8 1/32	1 1/8	1/4	25/32	11/32
1214MSC ++	14	8 5/8	1 7/32	1/4	27/32	3/8
1215MSC ++	15	9 3/32	1 9/32	9/32	29/32	13/32
1216MSC ++	16	9 1/2	1 3/8	9/32	15/16	13/32
1217MSC ++	17	10 1/16	1 15/32	5/16	1	7/16
1218MSC ++	18	10 17/32	1 17/32	5/16	1 1/16	15/32
1219MSC ++	19	11 1/32	1 5/8	11/32	1 1/8	1/2
1220MSC ++	20	11 1/2	1 23/32	3/8	1 3/16	1/2
1221MSC ++	21	11 25/32	1 3/4	3/8	1 7/32	17/32
1222MSC ++	22	12 1/2	1 29/32	13/32	1 5/16	9/16
1223MSC ++	23	12 7/8	1 31/32	7/16	1 11/32	9/16
1224MSC ++	24	13 9/32	2	7/16	1 3/8	19/32
1225MSC ++	25	14 1/32	2 5/32	15/32	1 15/32	5/8
1226MSC +	26	14 5/16	2 3/16	1/2	1 1/2	21/32
1227MSC +	27	14 25/32	2 9/32	1/2	1 9/16	11/16
1229MSC +	29	15 17/32	2 13/32	17/32	1 21/32	23/32
1230MSC +	30	16 9/32	2 17/32	17/32	1 3/4	3/4
1232MSC +	32	17 1/32	2 11/16	9/16	1 13/16	3/4
1234MSC +	34	17 25/32	2 13/16	19/32	1 29/32	3/4
1236MSC +	36	19 9/32	3 1/16	21/32	2 3/32	7/8

+ High Polish Chrome Finish with SUPERTORQUE® Box End
++ High Polish Chrome Finish with SUPERCOMBO® Open End and SUPERTORQUE® Box End
Fed. Spec.: ANSI B107.6; SAE AS 954

USA Made in U.S.A.

Features

- SUPERCOMBO® open end has specially designed grooves that direct wrench force away from fastener corners.
- SUPERTORQUE® box opening design allows application of higher torque without rounding or deforming hex fastener points. No contact is made at the corners. Instead, wrenching forces are placed on the flat surfaces behind the points.
- Meets or exceeds aerospace specification AS 954 for 12 point fasteners (as defined by AS 870) to provide accurate torque/tension relationship for precision application.
- May be used on all common hex (6 point) fasteners with considerable advantage over conventional box end wrenches to increase both hand tool flexibility and economy.
- Box and open end openings are identical.

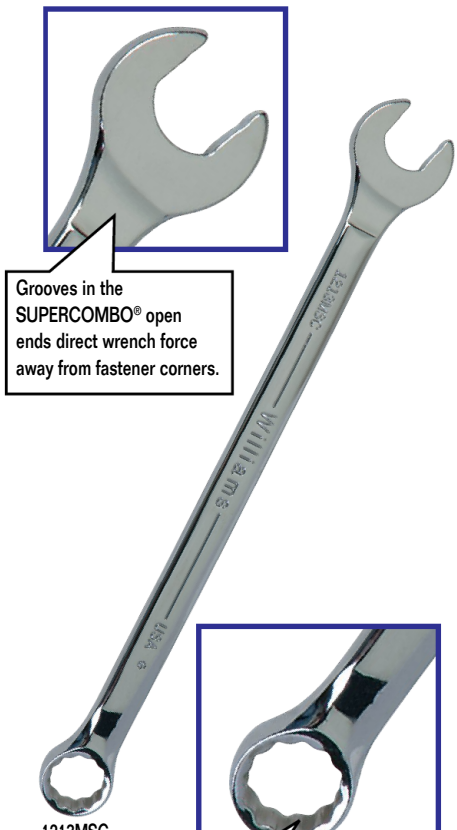

1213MSC

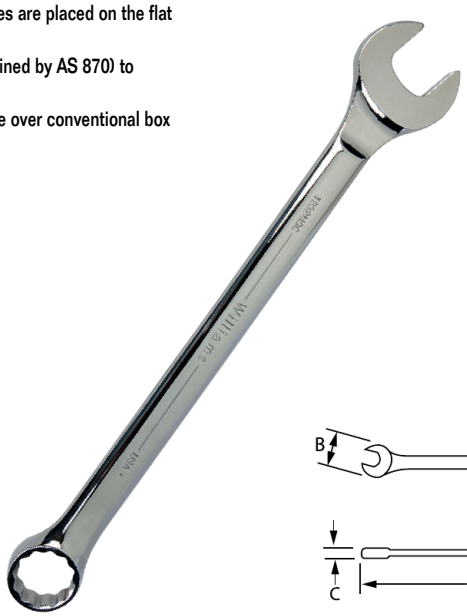

1232MSC

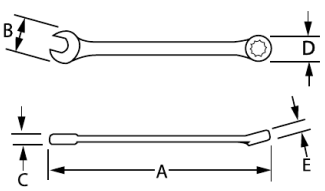

WILLIAMS®

SUPERCOMBO® WRENCH SETS

High Polish Chrome Finish, 12 Point, Metric
Set Contents:

Product Code	Size (MM)	MWS-1B 8-Piece Set in Roll Pouch	MWS-5A 10-Piece Set in Roll Pouch	MWS-10A 10-Piece Set in Roll Pouch	MWS-15A 15-Piece Set in Roll Pouch	MWS-18A 18-Piece Set in Roll Pouch	MWS-6A 10-Piece Set in Roll Pouch
1206MSC	6	X					
1207MSC	7	X	X		X	X	
1208MSC	8	X	X		X	X	
1209MSC	9	X	X		X	X	
1210MSC	10	X	X	X	X	X	
1211MSC	11	X	X	X	X	X	
1212MSC	12	X	X	X	X	X	
1213MSC	13	X	X	X	X	X	
1214MSC	14		X	X	X	X	
1215MSC	15		X	X	X	X	
1216MSC	16			X	X	X	
1217MSC	17		X	X	X	X	
1218MSC	18			X	X	X	X
1219MSC	19			X	X	X	X
1220MSC	20				X	X	
1221MSC	21				X	X	X
1222MSC	22					X	X
1223MSC	23					X	
1224MSC	24					X	X
1225MSC	25						
1226MSC	26						
1227MSC	27						X
1229MSC	29						
1230MSC	30						X
1232MSC	32						X
1234MSC	34						X
1236MSC	36						X
Roll Pouch		R-29	R-10	R-11	R-30 R-31	R-10 R-23	R-13

MWS-1B

MWS-5A

MWS-10A

Made in U.S.A.

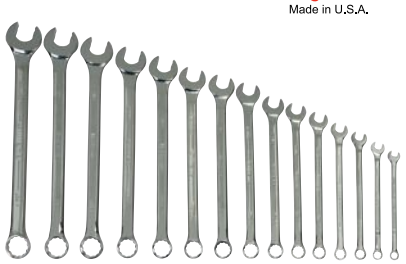
MWS-15A

MWS-18A

MWS-6A

WILLIAMS

SUPERCOMBO® COMBINATION WRENCHES

High Visibility Red Finish, 12 Point, SAE

Product Code	Size (Inches)	A Overall Length (Inches)	B Open End Width (Inches)	C Open End Thickness (Inches)	D Box End Diameter (Inches)	E Box End Thickness (Inches)
1212RSC ++	3/8	6 1/2	13/16	3/16	9/16	1/4
1214RSC ++	7/16	7 1/4	15/16	7/32	11/16	9/32
1216RSC ++	1/2	8	1 1/16	1/4	3/4	11/32
1218RSC ++	9/16	8 3/4	1 1/4	1/4	7/8	3/8
1220RSC ++	5/8	9 1/2	1 3/8	9/32	15/16	13/32
1222RSC ++	11/16	10 1/4	1 1/2	5/16	1 1/32	7/16
1224RSC ++	3/4	11	1 5/8	5/16	1 1/8	1/2
1226RSC ++	13/16	11 3/4	1 3/4	3/8	1 7/32	17/32
1228RSC ++	7/8	12 1/2	1 7/8	13/32	1 5/16	9/16
1230RSC ++	15/16	13 1/4	2	7/16	1 3/8	19/32
1232RSC ++	1	14	2 1/8	15/32	1 15/32	5/8
1234RSC ++	1 1/16	14 3/4	2 1/4	1/2	1 9/16	21/32
1236RSC ++	1 1/8	15 1/2	2 13/32	17/32	1 21/32	11/16
1240RSC ++	1 1/4	17	2 21/32	9/16	1 13/16	3/4

++ Hi-Vis Red Finish with SUPERCOMBO® Open End and SUPERTORQUE® Box End

Fed. Spec.: ANSI B107.6

1216RSC

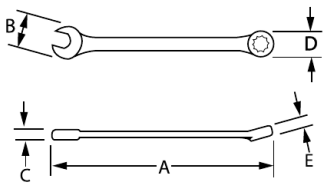

WS-1170RSC 7 Piece Hi-Vis Red Combination Wrench Set, 12 Point, SAE, in Roll Pouch – R-42

Contents Include:

Product Code	Size (Inches)	Product Code	Size (Inches)	Product Code	Size (Inches)
1212RSC	3/8	1218RSC	9/16	1224RSC	3/4
1214RSC	7/16	1220RSC	5/8	Roll Pouch	
1216RSC	1/2	1222RSC	11/16		

WS-1170RSC

WS-1171RSC 11 Piece Hi-Vis Red Combination Wrench Set, 12 Point, SAE, in Roll Pouch – R-41

Contents Include:

Product Code	Size (Inches)	Product Code	Size (Inches)	Product Code	Size (Inches)
1212RSC	3/8	1220RSC	5/8	1228RSC	7/8
1214RSC	7/16	1222RSC	11/16	1230RSC	15/16
1216RSC	1/2	1224RSC	3/4	1232RSC	1
1218RSC	9/16	1226RSC	13/16	Roll Pouch	

WS-1171RSC

WS-1172RSC 14 Piece Hi-Vis Red Combination Wrench Set, 12 Point, SAE, in Roll Pouch – R-37

Contents Include:

Product Code	Size (Inches)	Product Code	Size (Inches)	Product Code	Size (Inches)
1212RSC	3/8	1222RSC	11/16	1232RSC	1
1214RSC	7/16	1224RSC	3/4	1234RSC	1 1/16
1216RSC	1/2	1226RSC	13/16	1236RSC	1 1/8
1218RSC	9/16	1228RSC	7/8	1240RSC	1 1/4
1220RSC	5/8	1230RSC	15/16	Roll Pouch	

WS-1172RSC

Made in U.S.A.

Features

- SUPERCOMBO® open end has specially designed grooves that direct wrench force away from fastener corners.
- SUPERTORQUE® box opening design allows application of higher torque without rounding or deforming hex fastener points. No contact is made at the corners. Instead, wrenching forces are placed on the flat surfaces behind the points.
- Meets or exceeds aerospace specification AS 954 for 12 point fasteners (as defined by AS 870) to provide accurate torque/tension relationship for precision application.
- May be used on all common hex (6 point) fasteners with considerable advantage over conventional box end wrenches to increase both hand tool flexibility and economy.
- Box and open end openings are identical.

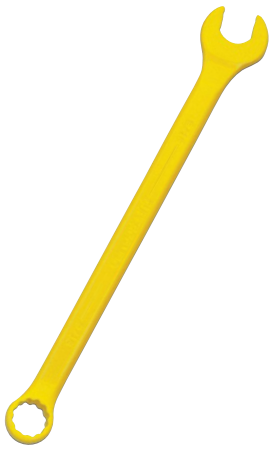
1216YSC

WS-1170YSC

WS-1171YSC

WS-1172YSC

WILLIAMS®

SUPERCOMBO® COMBINATION WRENCHES

High Visibility Yellow Finish, 12 Point, SAE

Product Code	Size (Inches)	A Overall Length Inches)	B Open End Width (Inches)	C Open End Thickness (Inches)	D Box End Diameter (Inches)	E Box End Thickness (Inches)
1212YSC ++	3/8	6 1/2	13/16	3/16	9/16	1/4
1214YSC ++	7/16	7 1/4	15/16	7/32	11/16	9/32
1216YSC ++	1/2	8	1 1/16	1/4	3/4	11/32
1218YSC ++	9/16	8 3/4	1 1/4	1/4	7/8	3/8
1220YSC ++	5/8	9 1/2	1 3/8	9/32	15/16	13/32
1222YSC ++	11/16	10 1/4	1 1/2	5/16	1 1/32	7/16
1224YSC ++	3/4	11	1 5/8	5/16	1 1/8	1/2
1226YSC ++	13/16	11 3/4	1 3/4	3/8	1 7/32	17/32
1228YSC ++	7/8	12 1/2	1 7/8	13/32	1 5/16	9/16
1230YSC ++	15/16	13 1/4	2	7/16	1 3/8	19/32
1232YSC ++	1	14	2 1/8	15/32	1 15/32	5/8
1234YSC ++	1 1/16	14 3/4	2 1/4	1/2	1 9/16	21/32
1236YSC ++	1 1/8	15 1/2	2 13/32	17/32	1 21/32	11/16
1240YSC ++	1 1/4	17	2 21/32	9/16	1 13/16	3/4

++ Hi-Vis Yellow Finish with SUPERCOMBO® Open End and SUPERTORQUE® Box End

Fed. Spec.: ANSI B107.6

WS-1170YSC 7 Piece Hi-Vis Yellow Combination Wrench Set, 12 Point, SAE, in Roll Pouch – R-42

Contents Include:

Product Code	Size (Inches)	Product Code	Size (Inches)	Product Code	Size (Inches)
1212YSC	3/8	1218YSC	9/16	1224YSC	3/4
1214YSC	7/16	1220YSC	5/8	Roll Pouch	
1216YSC	1/2	1222YSC	11/16		

WS-1171YSC 11 Piece Hi-Vis Yellow Combination Wrench Set, 12 Point, SAE, in Roll Pouch – R-41

Contents Include:

Product Code	Size (Inches)	Product Code	Size (Inches)	Product Code	Size (Inches)
1212YSC	3/8	1220YSC	5/8	1228YSC	7/8
1214YSC	7/16	1222YSC	11/16	1230YSC	15/16
1216YSC	1/2	1224YSC	3/4	1232YSC	1
1218YSC	9/16	1226YSC	13/16	Roll Pouch	

WS-1172YSC 14 Piece Hi-Vis Yellow Combination Wrench Set, 12 Point, SAE, in Roll Pouch – R-37

Contents Include:

Product Code	Size (Inches)	Product Code	Size (Inches)	Product Code	Size (Inches)
1212YSC	3/8	1222YSC	11/16	1232YSC	1
1214YSC	7/16	1224YSC	3/4	1234YSC	1 1/16
1216YSC	1/2	1226YSC	13/16	1236YSC	1 1/8
1218YSC	9/16	1228YSC	7/8	1240YSC	1 1/4
1220YSC	5/8	1230YSC	15/16	Roll Pouch	

Made in U.S.A.

Features

- SUPERCOMBO® open end has specially designed grooves that direct wrench force away from fastener corners.
- SUPERTORQUE® box opening design allows application of higher torque without rounding or deforming hex fastener points. No contact is made at the corners. Instead, wrenching forces are placed on the flat surfaces behind the points.
- Meets or exceeds aerospace specification AS 954 for 12 point fasteners (as defined by AS 870) to provide accurate torque/tension relationship for precision application.
- May be used on all common hex (6 point) fasteners with considerable advantage over conventional box end wrenches to increase both hand tool flexibility and economy.
- Box and open end openings are identical.

WILLIAMS

COMBINATION WRENCHES

High Polish Chrome Finish, 12 Point, SAE

Product Code	Size (Inches)	A Overall Length (Inches)	B Open End Width (Inches)	C Open End Thickness (Inches)	D Box End Diameter (Inches)	E Box End Thickness (Inches)
11208	1/4	5 1/8	9/16	5/32	7/16	7/32
11210	5/16	5 3/4	23/32	3/16	17/32	9/32
11212	3/8	6 1/2	13/16	3/16	5/8	5/16
11214	7/16	7 1/4	31/32	7/32	11/16	5/16
11216	1/2	8 1/8	1 3/32	1/4	25/32	3/8
11218	9/16	8 3/4	1 7/32	1/4	7/8	3/8
11220	5/8	9 1/2	1 3/8	9/32	31/32	7/16
11222	11/16	10 1/4	1 1/2	11/32	1 1/16	15/32
11224	3/4	11	1 5/8	3/8	1 3/32	1/2
11226	13/16	12	1 25/32	13/32	1 5/16	9/16
11228	7/8	12 3/8	1 7/8	3/8	1 11/32	9/16
11230	15/16	13 1/4	2 1/32	13/32	1 13/32	5/8
11232	1	14	2 3/32	7/16	1 1/2	11/16
11234	1 1/16	14 5/8	2 5/32	15/32	1 19/32	11/16
11236	1 1/8	16 1/4	2 5/16	1/2	1 21/32	3/4
11240	1 1/4	17	2 17/32	9/16	1 3/4	3/4

11216

11003

Fed. Spec.: ANSI B107.6; SAE AS 954

11003 9 Piece Combination Wrench Set, 12 Point, SAE, in Vinyl Pouch – 50003

Contents Include:

Product Code	Size (Inches)	Product Code	Size (Inches)	Product Code	Size (Inches)
11208	1/4	11214	7/16	11220	5/8
11210	5/16	11216	1/2	11222	11/16
11212	3/8	11218	9/16	11224	3/4

11007

11007 11 Piece Combination Wrench Set, 12 Point, SAE, in Vinyl Pouch – 50005

Contents Include:

Product Code	Size (Inches)	Product Code	Size (Inches)	Product Code	Size (Inches)
11212	3/8	11220	5/8	11228	7/8
11214	7/16	11222	11/16	11230	15/16
11216	1/2	11224	3/4	11232	1
11218	9/16	11226	13/16		

11008

11008 14 Piece Combination Wrench Set, 12 Point, SAE, in Vinyl Pouch – 50007

Contents Include:

Product Code	Size (Inches)	Product Code	Size (Inches)	Product Code	Size (Inches)
11208	1/4	11220	5/8	11232	1
11210	5/16	11222	11/16	11234	1 1/16
11212	3/8	11224	3/4		
11214	7/16	11226	13/16		
11216	1/2	11228	7/8		
11218	9/16	11230	15/16		

11009 16 Piece Combination Wrench Set, 12 Point, SAE, in Vinyl Pouch – 50007

Contents Include:

Product Code	Size (Inches)	Product Code	Size (Inches)	Product Code	Size (Inches)
11208	1/4	11220	5/8	11232	1
11210	5/16	11222	11/16	11234	1 1/16
11212	3/8	11224	3/4	11236	1 1/8
11214	7/16	11226	13/16	11240	1 1/4
11216	1/2	11228	7/8		
11218	9/16	11230	15/16		

11009

Features

- High polish chrome textured finish provides great feel and extra gripping power.
- 12 point box end provides easy socket engagement and maximum versatility.
- Recessed corners in box end provide extra turning power.
- Sets are packed in a vinyl pouch.

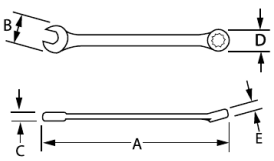

11610

11011

11013

11015

11017

WILLIAMS 12 M

COMBINATION WRENCHES

High Polish Chrome Finish, 12 Point, Metric

Product Code	Size (MM)	A Overall Length (Inches)	B Open End Width (Inches)	C Open End Thickness (Inches)	D Box End Diameter (Inches)	E Box End Thickness (Inches)
11606	6	5 1/8	9/16	5/32	7/16	7/32
11607	7	5 3/8	21/32	5/32	1/2	1/4
11608	8	5 3/4	23/32	3/16	17/32	9/32
11609	9	6 1/2	13/16	7/32	19/32	5/16
11610	10	6 3/4	7/8	7/32	5/8	5/16
11611	11	7 1/4	31/32	7/32	11/16	5/16
11612	12	7 3/4	1	7/32	3/4	11/32
11613	13	8 1/8	1 3/32	1/4	25/32	3/8
11614	14	8 3/4	1 7/32	1/4	7/8	3/8
11615	15	9 1/8	1 9/32	9/32	29/32	13/32
11616	16	9 1/2	1 11/32	9/32	31/32	7/16
11617	17	10 1/4	1 15/32	11/32	1 1/32	15/32
11618	18	10 1/2	1 9/16	11/32	1 3/32	1/2
11619	19	11	1 21/32	11/32	1 1/8	1/2
11620	20	11 3/8	1 11/16	3/8	1 27/32	9/16
11621	21	12	1 25/32	13/32	1 5/16	9/16
11622	22	12 1/2	1 7/8	3/8	1 9/32	9/16
11623	23	12 1/2	1 27/32	3/8	1 11/32	9/16
11624	24	13 1/4	2 1/32	13/32	1 13/32	5/8
11625	25	14	2 5/32	7/16	1 1/2	11/16
11626	26	14	2 5/32	7/16	1 1/2	11/16
11627	27	14 5/8	2 5/32	15/32	1 19/32	11/16
11629	29	16 1/4	2 5/16	1/2	1 21/32	3/4
11630	30	16 1/4	2 5/16	1/2	1 21/32	3/4
11632	32	17	2 17/32	9/16	1 3/4	3/4

Fed. Spec.: ANSI B107.6; SAE AS 954

11011 9 Piece Combination Wrench Set, 12 Point, Metric, in Vinyl Pouch – 50001
Contents Include:

Product Code	Size (MM)	Product Code	Size (MM)	Product Code	Size (MM)
11606	6	11609	9	11612	12
11607	7	11610	10	11613	13
11608	8	11611	11	11614	14

11013 14 Piece Combination Wrench Set, 12 Point, Metric, in Vinyl Pouch – 50003
Contents Include:

Product Code	Size (MM)	Product Code	Size (MM)	Product Code	Size (MM)
11606	6	11611	11	11616	16
11607	7	11612	12	11617	17
11608	8	11613	13	11618	18
11609	9	11614	14	11619	19
11610	10	11615	15		

11015 19 Piece Combination Wrench Set, 12 Point, Metric, in Vinyl Pouch – 50005
Contents Include:

Product Code	Size (MM)	Product Code	Size (MM)	Product Code	Size (MM)
11606	6	11613	13	11620	20
11607	7	11614	14	11621	21
11608	8	11615	15	11622	22
11609	9	11616	16	11623	23
11610	10	11617	17	11624	24
11611	11	11618	18		
11612	12	11619	19		

11017 25 Piece Combination Wrench Set, 12 Point, Metric, in Vinyl Pouch – 50007
Contents Include:

Product Code	Size (MM)	Product Code	Size (MM)	Product Code	Size (MM)
11606	6	11615	15	11624	24
11607	7	11616	16	11625	25
11608	8	11617	17	11626	26
11609	9	11618	18	11627	27
11610	10	11619	19	11628	28
11611	11	11620	20	11629	29
11612	12	11621	21	11630	30
11613	13	11622	22	11631	31
11614	14	11623	23	11632	32

Features
- High polish chrome textured finish provides great feel and extra gripping power.
- 12 point box end provides easy socket engagement and maximum versatility.
- Recessed corners in box end provide extra turning power.
- Sets are packed in a vinyl pouch.

WILLIAMS

COMBINATION WRENCHES

Satin Chrome Finish, 12 Point, SAE

Product Code	Size (Inches)	A Overall Length (Inches)	B Open End Width (Inches)	C Open End Thickness (Inches)	D Box End Diameter (Inches)	E Box End Thickness (Inches)
11108	1/4	5 1/8	9/16	5/32	7/16	7/32
11110	5/16	5 3/4	23/32	3/16	17/32	9/32
11112	3/8	6 1/2	13/16	3/16	5/8	5/16
11114	7/16	7 1/4	31/32	7/32	11/16	5/16
11116	1/2	8 1/8	1 3/32	1/4	25/32	3/8
11118	9/16	8 3/4	1 7/32	1/4	7/8	3/8
11120	5/8	9 1/2	1 3/8	9/32	31/32	7/16
11122	11/16	10 1/4	1 1/2	11/32	1 1/16	15/32
11124	3/4	11	1 5/8	3/8	1 3/32	1/2
11126	13/16	12	1 25/32	13/32	1 5/16	9/16
11128	7/8	12 3/8	1 7/8	3/8	1 11/32	9/16
11130	15/16	13 1/4	2 1/32	13/32	1 13/32	5/8
11132	1	14	2 3/32	7/16	1 1/2	11/16
11134	1 1/16	14 5/8	2 5/32	15/32	1 19/32	11/16
11136	1 1/8	16 1/4	2 5/16	1/2	1 21/32	3/4
11140	1 1/4	17	2 17/32	9/16	1 3/4	3/4

Fed. Spec.: ANSI B107.6; SAE AS 954

11002 9 Piece Combination Wrench Set, 12 Point, SAE, in Vinyl Pouch – 50003

Contents Include:

Product Code	Size (Inches)	Product Code	Size (Inches)	Product Code	Size (Inches)
11108	1/4	11114	7/16	11120	5/8
11110	5/16	11116	1/2	11122	11/16
11112	3/8	11118	9/16	11124	3/4

11004 11 Piece Combination Wrench Set, 12 Point, SAE, in Vinyl Pouch – 50005

Contents Include:

Product Code	Size (Inches)	Product Code	Size (Inches)	Product Code	Size (Inches)
11112	3/8	11120	5/8	11128	7/8
11114	7/16	11122	11/16	11130	15/16
11116	1/2	11124	3/4	11132	1
11118	9/16	11126	13/16		

11005 14 Piece Combination Wrench Set, 12 Point, SAE, in Vinyl Pouch – 50007

Contents Include:

Product Code	Size (Inches)	Product Code	Size (Inches)	Product Code	Size (Inches)
11108	1/4	11120	5/8	11132	1
11110	5/16	11122	11/16	11134	1 1/16
11112	3/8	11124	3/4		
11114	7/16	11126	13/16		
11116	1/2	11128	7/8		
11118	9/16	11130	15/16		

11006 16 Piece Combination Wrench Set, 12 Point, SAE, in Vinyl Pouch – 50007

Contents Include:

Product Code	Size (Inches)	Product Code	Size (Inches)	Product Code	Size (Inches)
11108	1/4	11120	5/8	11132	1
11110	5/16	11122	11/16	11134	1 1/16
11112	3/8	11124	3/4	11136	1 1/8
11114	7/16	11126	13/16	11140	1 1/4
11116	1/2	11128	7/8		
11118	9/16	11130	15/16		

Features

- Satin chrome textured finish provides great feel and extra gripping power.
- 12 point box end provides easy socket engagement and maximum versatility.
- Recessed corners in box end provide extra turning power.
- Sets are packed in a vinyl pouch.

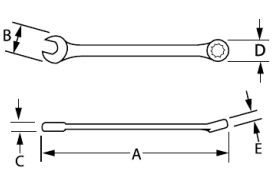

11116

11002

11004

11005

11006

11510

11010

11012

11014

11016

WILLIAMS

12 M

COMBINATION WRENCHES

Satin Chrome Finish, 12 Point, Metric

Product Code	Size (MM)	A Overall Length (Inches)	B Open End Width (Inches)	C Open End Thickness (Inches)	D Box End Diameter (Inches)	E Box End Thickness (Inches)
11506	6	5 1/8	9/16	5/32	7/16	7/32
11507	7	5 3/8	21/32	5/32	1/2	1/4
11508	8	5 3/4	23/32	3/16	17/32	9/32
11509	9	6 1/2	13/16	7/32	19/32	5/16
11510	10	6 3/4	7/8	7/32	5/8	5/16
11511	11	7 1/4	31/32	7/32	11/16	5/16
11512	12	7 3/4	1	7/32	3/4	11/32
11513	13	8 1/8	1 3/32	1/4	25/32	3/8
11514	14	8 3/4	1 7/32	1/4	7/8	3/8
11515	15	9 1/8	1 9/32	9/32	29/32	13/32
11516	16	9 1/2	1 11/32	9/32	31/32	7/16
11517	17	10 1/4	1 15/32	11/32	1 1/32	15/32
11518	18	10 1/2	1 9/16	11/32	1 3/32	1/2
11519	19	11	1 21/32	11/32	1 1/8	1/2
11520	20	11 3/8	1 11/16	3/8	1 27/32	9/16
11521	21	12	1 25/32	13/32	1 5/16	9/16
11522	22	12 1/2	1 7/8	3/8	1 9/32	9/16
11523	23	12 1/2	1 27/32	3/8	1 11/32	9/16
11524	24	13 1/4	2 1/32	13/32	1 13/32	5/8
11525	25	14	2 5/32	7/16	1 1/2	11/16
11526	26	14	2 5/32	7/16	1 1/2	11/16
11527	27	14 5/8	2 5/32	15/32	1 19/32	11/16
11529	29	16 1/4	2 5/16	1/2	1 21/32	3/4
11530	30	16 1/4	2 5/16	1/2	1 21/32	3/4
11532	32	17	2 17/32	9/16	1 3/4	3/4

Fed. Spec.: ANSI B107.6; SAE AS 954

11010 9 Piece Combination Wrench Set, 12 Point, Metric, in Vinyl Pouch – 50001
Contents Include:

Product Code	Size (MM)	Product Code	Size (MM)	Product Code	Size (MM)
11506	6	11509	9	11512	12
11507	7	11510	10	11513	13
11508	8	11511	11	11514	14

11012 14 Piece Combination Wrench Set, 12 Point, Metric, in Vinyl Pouch – 50003
Contents Include:

Product Code	Size (MM)	Product Code	Size (MM)	Product Code	Size (MM)
11506	6	11511	11	11516	16
11507	7	11512	12	11517	17
11508	8	11513	13	11518	18
11509	9	11514	14	11519	19
11510	10	11515	15		

11014 19 Piece Combination Wrench Set, 12 Point, Metric, in Vinyl Pouch – 50005
Contents Include:

Product Code	Size (MM)	Product Code	Size (MM)	Product Code	Size (MM)
11506	6	11513	13	11520	20
11507	7	11514	14	11521	21
11508	8	11515	15	11522	22
11509	9	11516	16	11523	23
11510	10	11517	17	11524	24
11511	11	11518	18		
11512	12	11519	19		

11016 25 Piece Combination Wrench Set, 12 Point, Metric, in Vinyl Pouch – 50007
Contents Include:

Product Code	Size (MM)	Product Code	Size (MM)	Product Code	Size (MM)
11506	6	11515	15	11524	24
11507	7	11516	16	11525	25
11508	8	11517	17	11526	26
11509	9	11518	18	11527	27
11510	10	11519	19	11528	28
11511	11	11520	20	11529	29
11512	12	11521	21	11530	30
11513	13	11522	22	11531	31
11514	14	11523	23	11532	32

Features
- Satin chrome textured finish provides great feel and extra gripping power.
- 12 point box end provides easy socket engagement and maximum versatility.
- Recessed corners in box end provide extra turning power.
- Sets are packed in a vinyl pouch.

WILLIAMS

OFFSET COMBINATION WRENCHES

High Polish Chrome Finish, 12 Point Offset Box End, SAE

Product Code	Size (Inches)	A Overall Length (Inches)	B Open End Width (Inches)	C Open End Thickness (Inches)	D Box End Diameter (Inches)	E Box End Thickness (Inches)
11950	1/4	3 3/4	9/16	5/32	13/32	5/32
11951	5/16	4 1/2	11/16	3/16	1/2	7/32
11970	11/32	5	25/32	3/16	17/32	1/4
11952	3/8	5	25/32	3/16	9/16	1/4
11953	7/16	5 3/4	15/16	3/16	5/8	1/4
11954	1/2	6 3/4	1 1/8	7/32	23/32	5/16
11955	9/16	7 1/4	1 7/32	1/4	13/16	3/8
11956	5/8	8 1/8	1 3/8	1/4	29/32	3/8
11957	11/16	8 3/4	1 7/16	9/32	31/32	13/32
11958	3/4	9 5/8	1 5/8	5/16	1 1/16	15/32
11959	13/16	10 1/2	1 21/32	5/16	1 5/32	15/32
11960	7/8	10 1/2	1 7/8	11/32	1 9/32	1/2
11961	15/16	11 3/4	2 1/32	11/32	1 11/32	9/16
11962	1	13	2 5/32	11/32	1 7/16	19/32
11963	1 1/16	13	2 9/32	3/8	1 17/32	5/8
11964	1 1/8	14 1/2	2 13/32	3/8	1 19/32	11/16
11965	1 1/4	15 1/4	2 21/32	7/16	1 25/32	23/32
11966	1 5/16	16 1/4	2 13/16	15/32	1 7/8	25/32
11967	1 3/8	16 3/8	2 13/16	15/32	1 7/8	25/32
11968	1 7/16	17	3 1/16	9/16	2 1/8	7/8
11969	1 1/2	17	3 1/16	17/32	2 3/32	27/32

11954

11990 9 Piece Offset Combination Wrench Set, 12 Point, SAE, in Deluxe Roll Pouch

Contents Include:

Product Code	Size (Inches)	Product Code	Size (Inches)	Product Code	Size (Inches)
11952	3/8	11955	9/16	11958	3/4
11953	7/16	11956	5/8	11959	13/16
11954	1/2	11957	11/16	11960	7/8

Features

- Unique 10° offset box end provides extra knuckle clearance.
- High-polished chrome finish cleans easily.
- 12 point box end provides maximum versatility.
- Recessed corners in box end provide extra turning power.
- Deluxe roll pouch with clear front and velcro fastening keeps wrenches organized and visible.

11990

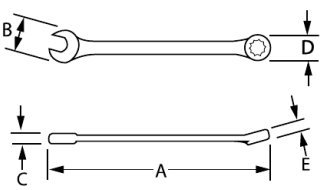

11316

11030

WILLIAMS 12 F

STUBBY COMBINATION WRENCHES

High Polish Chrome Finish, 12 Point, SAE

Product Code	Size (Inches)	A Overall Length (Inches)	B Open End Width (Inches)	C Open End Thickness (Inches)	D Box End Diameter (Inches)	E Box End Thickness (Inches)
11310	5/16	3 9/16	11/16	5/32	1/2	7/16
11312	3/8	3 3/4	13/16	3/16	19/32	1/2
11314	7/16	3 15/16	15/16	7/32	21/32	9/16
11316	1/2	4 1/4	1 1/16	1/4	3/4	11/16
11318	9/16	4 1/2	1 3/16	9/32	27/32	3/4
11320	5/8	4 3/4	1 5/16	9/32	15/16	13/16
11322	11/16	5	1 7/16	5/16	1 1/32	7/8
11324	3/4	5 7/16	1 9/16	11/32	1 1/8	15/16

Fed. Spec.: ANSI B107.6

11030 7 Piece Stubby Combination Wrench Set, 12 Point, SAE, in Deluxe Roll Pouch

Contents Include:

Product Code	Size (Inches)	Product Code	Size (Inches)	Product Code	Size (Inches)
11312	3/8	11318	9/16	11324	3/4
11314	7/16	11320	5/8		
11316	1/2	11322	11/16		

Features

- Extra short handle for access where clearance is limited.
- High-polished chrome finish cleans easily.
- 12 point box end provides maximum versatility.
- Recessed corners in box end provide extra turning power.

11714

WILLIAMS 12 M

STUBBY COMBINATION WRENCHES

High Polish Chrome Finish, 12 Point, Metric

Product Code	Size (MM)	A Overall Length (Inches)	B Open End Width (Inches)	C Open End Thickness (Inches)	D Box End Diameter (Inches)	E Box End Thickness (Inches)
11708	8	3 1/2	11/16	5/32	1/2	7/16
11710	10	3 3/4	13/16	7/32	19/32	1/2
11711	11	3 15/16	15/16	7/32	21/32	9/16
11712	12	4 1/16	1	1/4	21/32	5/8
11713	13	4 1/4	1 1/16	1/4	25/32	11/16
11714	14	4 1/2	1 1/8	9/32	27/32	11/16
11715	15	4 5/8	1 1/4	9/32	29/32	3/4
11716	16	4 3/4	1 5/16	5/16	15/16	13/16
11717	17	5	1 3/8	5/16	1	7/8
11718	18	5 3/16	1 7/16	5/16	1 1/32	7/8
11719	19	5 7/16	1 9/16	5/16	1 1/8	15/16

Fed. Spec.: ANSI B107.9M

11032 7 Piece Stubby Combination Wrench Set, 12 Point, Metric, in Deluxe Roll Pouch

Contents Include:

Product Code	Size (MM)	Product Code	Size (MM)	Product Code	Size (MM)
11710	10	11714	14	11718	18
11712	12	11715	15		
11713	13	11717	17		

Features

- Extra short handle for access where clearance is limited.
- High-polished chrome finish cleans easily.
- 12 point box end provides maximum versatility.
- Recessed corners in box end provide extra turning power.

11032

WILLIAMS

FLEX-HEAD COMBINATION WRENCHES

High Polish Chrome Finish, 12 Point Flex-Head Semi-Deep Socket End, SAE

Product Code	Size (Inches)	A Overall Length (Inches)	B Open End Width (Inches)	C Open End Thickness (Inches)	D Socket Diameter (Inches)	E Hex Depth (Inches)
11900	3/8	7	15/16	7/32	9/16	1/2
11901	7/16	7	15/16	7/32	5/8	17/32
11902	1/2	8	1 15/16	1/4	25/32	19/32
11903	9/16	8 3/4	1 9/32	1/4	13/16	21/32
11904	5/8	9 3/4	1 15/32	9/32	14/16	3/4
11905	11/16	9 3/4	1 15/32	9/32	15/16	3/4
11906	3/4	10 3/4	1 19/32	1/4	1	25/32

11900

11940 7 Piece Flex-Head Combination Wrench Set, 12 Point, SAE, in Deluxe Roll Pouch

Contents Include:

Product Code	Size (Inches)	Product Code	Size (Inches)	Product Code	Size (Inches)
11900	3/8	11903	9/16	11906	3/4
11901	7/16	11904	5/8		
11902	1/2	11905	11/16		

11940

Features

- Unique semi-deep socket end provides extra bolt clearance.
- High-polished chrome finish cleans easily.
- 12 point socket end provides maximum versatility.
- Recessed corners in socket end provide extra turning power.
- Deluxe roll pouch with clear front and velcro fastening keeps wrenches organized and visible.

WILLIAMS

DOUBLE FLEX-HEAD WRENCHES

High Polish Chrome Finish, 12 Point Flex-Head Semi-Deep Socket End, SAE

Product Code	Size (Inches)	A Overall Length (Inches)	B Socket Diameter (Inches)	C Hex Depth (Inches)	D Socket Diameter (Inches)	E Hex Depth (Inches)
12601	3/8 x 7/16	7 13/16	9/16	15/32	5/8	17/32
12603	1/2 x 9/16	9 3/4	23/32	5/8	13/16	21/32
12605	5/8 x 11/16	10	27/32	23/32	15/16	3/4
12607	3/4 x 7/8	12	1	3/4	1 5/32	29/32

12607

12691 4 Piece Double Flex-Head Wrench Set, 12 Point, SAE, in Deluxe Roll Pouch

Contents Include:

Product Code	Size (Inches)	Product Code	Size (Inches)
12601	3/8 x 7/16	12605	5/8 x 11/16
12603	1/2 x 9/16	12607	3/4 x 7/8

12691

Features

- Unique semi-deep socket end provides extra bolt clearance.
- High-polished chrome finish cleans easily.
- 12 point socket end provides maximum versatility.
- Recessed corners in socket end provide extra turning power.

1226RC

WS-1168RC

WS-1164RC

WILLIAMS

12 F

REVERSIBLE RATCHETING COMBINATION WRENCHES

High Polish Chrome Finish, 12 Point, SAE

Product Code	Size (Inches)	A Overall Length (Inches)	B Open End Width (Inches)	C Open End Thickness (Inches)	D Box End Diameter (Inches)	E Box End Thickness (Inches)
1208RC	1/4	4 1/2	21/32	5/32	21/32	9/32
1210RC	5/16	5 1/4	23/32	5/32	23/32	9/32
1212RC	3/8	6 1/4	7/8	3/16	7/8	5/16
1214RC	7/16	6 5/8	15/16	7/32	29/32	11/32
1216RC	1/2	7	1 1/32	1/4	1	13/32
1218RC	9/16	7 3/8	1 3/16	1/4	1 3/32	13/32
1220RC	5/8	8 7/32	1 11/32	9/32	1 7/32	7/16
1222RC	11/16	9	1 7/16	9/32	1 11/16	1/2
1224RC	3/4	9 3/4	1 17/32	11/32	1 15/32	17/32
1226RC	13/16	10 1/2	1 23/32	3/8	1 9/16	17/32
1228RC	7/8	11 13/32	1 7/8	11/32	1 21/32	19/32
1230RC	15/16	12	1 31/32	15/32	1 27/32	5/8
1232RC	1	13	2 3/32	15/32	1 7/8	5/8

WS-1168RC 8 Piece Reversible Ratcheting Combination Wrench Set, SAE, in Plastic Tray

Contents Include:

Product Code	Size (Inches)	Product Code	Size (Inches)	Product Code	Size (Inches)
1210RC	5/16	1216RC	1/2	1222RC	11/16
1212RC	3/8	1218RC	9/16	1224RC	3/4
1214RC	7/16	1220RC	5/8		

WS-1164RC 4 Piece Reversible Ratcheting Combination Wrench Set, SAE, in Plastic Tray

Contents Include:

Product Code	Size (Inches)	Product Code	Size (Inches)
1226RC	13/16	1230RC	15/16
1228RC	7/8	1232RC	1

Features

- High-polished chrome finish cleans easily.
- Ratchet lever is easily accessible for quick direction changes.
- Recessed corners in ends provide extra turning power.

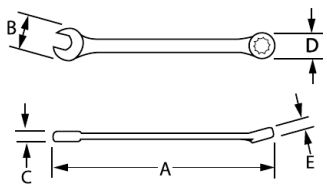

WILLIAMS®

REVERSIBLE RATCHETING COMBINATION WRENCHES

High Polish Chrome Finish, 12 Point, Metric

Product Code	Size (MM)	A Overall Length (Inches)	B Open End Width (Inches)	C Open End Thickness (Inches)	D Box End Diameter (Inches)	E Box End Thickness (Inches)
1206MRC	6	4 1/2	21/32	5/32	21/32	1/4
1208MRC	8	5 1/4	23/32	3/16	23/32	9/32
1209MRC	9	5 7/8	13/16	5/32	25/32	5/16
1210MRC	10	6 1/4	7/8	7/32	7/8	11/32
1211MRC	11	6 5/8	15/16	7/32	29/32	11/32
1212MRC	12	6 13/16	1	7/32	31/32	3/8
1213MRC	13	7	1 1/32	1/4	1	13/32
1214MRC	14	7 3/8	1 3/16	1/4	1 3/32	13/32
1215MRC	15	7 3/4	1 1/4	9/32	1 5/32	7/16
1216MRC	16	8 3/16	1 11/32	9/32	1 7/32	7/16
1217MRC	17	9	1 7/16	9/32	1 9/32	1/2
1218MRC	18	9 3/8	1 17/32	5/16	1 3/8	15/32
1219MRC	19	9 3/4	1 17/32	11/32	1 7/16	17/32
1221MRC	21	10 3/4	1 23/32	3/8	1 9/16	9/16
1222MRC	22	11 1/4	1 27/32	3/8	1 21/32	19/32
1224MRC	24	12	1 31/32	15/32	1 27/32	5/8
1225MRC	25	12 31/32	2 3/32	15/32	1 7/8	5/8

1219MRC

MWS-12RC 12 Piece Reversible Ratcheting Combination Wrench Set, Metric, in Plastic Tray

Contents Include:

Product Code	Size (MM)	Product Code	Size (MM)	Product Code	Size (MM)
1208MRC	8	1212MRC	12	1216MRC	16
1209MRC	9	1213MRC	13	1217MRC	17
1210MRC	10	1214MRC	14	1218MRC	18
1211MRC	11	1215MRC	15	1219MRC	19

MWS-12RC

MWS-4RC 4 Piece Reversible Ratcheting Combination Wrench Set, Metric, in Roll Pouch – 50003

Contents Include:

Product Code	Size (MM)	Product Code	Size (MM)
1221MRC	21	1224MRC	24
1222MRC	22	1225MRC	25

Features

- High-polished chrome finish cleans easily.
- Ratchet lever is easily accessible for quick direction changes.
- Recessed corners in ends provide extra turning power.

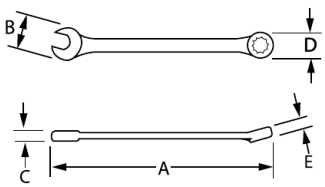

MWS-4RC

1216RCF

WS-1168RCF

WILLIAMS®

12 F

FLEX-HEAD REVERSIBLE RATCHETING COMBINATION WRENCHES

High Polish Chrome Finish, 12 Point, SAE

Product Code	Size (Inches)	A Overall Length (Inches)	B Open End Width (Inches)	C Open End Thickness (Inches)	D Box End Diameter (Inches)	E Box End Thickness (Inches)
1210RCF	5/16	5 1/2	23/32	5/32	23/32	1/4
1212RCF	3/8	6 5/16	29/32	7/32	7/8	5/16
1214RCF	7/16	6 11/16	31/32	7/32	29/32	11/32
1216RCF	1/2	7 1/4	1 1/32	1/4	1	13/32
1218RCF	9/16	7 19/32	1 3/16	1/4	1 3/32	13/32
1220RCF	5/8	8 13/32	1 3/8	9/32	1 1/4	7/16
1222RCF	11/16	9	1 15/32	9/32	1 9/32	1/2
1224RCF	3/4	10	1 9/16	11/32	1 15/32	1/2

WS-1168RCF 8 Piece Reversible Flex-Head Ratcheting Combination Wrench Set, SAE, in Plastic Tray

Contents Include:

Product Code	Size (Inches)	Product Code	Size (Inches)	Product Code	Size (Inches)
1210RCF	5/16	1216RCF	1/2	1222RCF	11/16
1212RCF	3/8	1218RCF	9/16	1224RCF	3/4
1214RCF	7/16	1220RCF	5/8		

Features

- Flex-Head pivots 90° in either direction for access in tight areas.
- Fine tooth design with dual-pawl mechanism for extra strength.
- High-polished chrome finish cleans easily.
- Ratchet lever is easily accessible for quick direction changes.
- Recessed corners in ends provide extra turning power.

1213MRCF

MWS-12RCF

WILLIAMS®

12 M

FLEX-HEAD REVERSIBLE RATCHETING COMBINATION WRENCHES

High Polish Chrome Finish, 12 Point, Metric

Product Code	Size (MM)	A Overall Length (Inches)	B Open End Width (Inches)	C Open End Thickness (Inches)	D Box End Diameter (Inches)	E Box End Thickness (Inches)
1208MRCF	8	5 9/16	23/32	5/32	23/32	9/32
1209MRCF	9	6	13/16	5/32	25/32	5/16
1210MRCF	10	6 5/16	29/32	7/32	27/32	5/16
1211MRCF	11	6 3/4	31/32	7/32	29/32	11/32
1212MRCF	12	7	1 1/32	7/32	31/32	3/8
1213MRCF	13	7 11/16	1 1/16	1/4	1	13/32
1214MRCF	14	7 19/32	1 3/16	1/4	1 3/32	13/32
1215MRCF	15	8	1 1/4	9/32	1 5/32	7/16
1216MRCF	16	8 5/16	1 3/8	9/32	1 7/32	7/16
1217MRCF	17	9	1 15/32	9/32	1 9/32	1/2
1218MRCF	18	9 1/2	1 9/16	5/16	1 3/8	1/2
1219MRCF	19	10	1 9/16	11/32	1 15/32	17/32

MWS-12RCF 12 Piece Reversible Flex-Head Ratcheting Combination Wrench Set, Metric, in Plastic Tray

Contents Include:

Product Code	Size (MM)	Product Code	Size (MM)	Product Code	Size (MM)
1208MRCF	8	1212MRCF	12	1216MRCF	16
1209MRCF	9	1213MRCF	13	1217MRCF	17
1210MRCF	10	1214MRCF	14	1218MRCF	18
1211MRCF	11	1215MRCF	15	1219MRCF	19

Features

- Flex-Head pivots 90° in either direction for access in tight areas.
- Fine tooth design with dual-pawl mechanism for extra strength.
- High-polished chrome finish cleans easily.
- Ratchet lever is easily accessible for quick direction changes.
- Recessed corners in ends provide extra turning power.

WILLIAMS

STUBBY REVERSIBLE RATCHETING COMBINATION WRENCHES

High Polish Chrome Finish, 12 Point, SAE

Product Code	Size (Inches)	A Overall Length (Inches)	B Open End Width (Inches)	C Open End Thickness (Inches)	D Box End Diameter (Inches)	E Box End Thickness (Inches)
1210RCS	5/16	3 1/2	23/32	5/32	23/32	9/32
1212RCS	3/8	3 29/32	7/8	3/16	7/8	11/32
1214RCS	7/16	4	31/32	7/32	7/8	11/32
1216RCS	1/2	4 1/2	1 1/16	1/4	1	13/32
1218RCS	9/16	4 11/16	1 3/16	1/4	1 3/32	13/32
1220RCS	5/8	5	1 11/32	9/32	1 7/32	15/32
1222RCS	11/16	5 1/4	1 1/2	9/32	1 5/16	1/2
1224RCS	3/4	5 1/2	1 19/32	11/32	1 15/32	17/32

1216RCS

WS-1168RCS 8 Piece Reversible Stubby Ratcheting Combination Wrench Set, SAE, in Plastic Tray

Contents Include:

Product Code	Size (Inches)	Product Code	Size (Inches)	Product Code	Size (Inches)
1210RCS	5/16	1216RCS	1/2	1222RCS	11/16
1212RCS	3/8	1218RCS	9/16	1224RCS	3/4
1214RCS	7/16	1220RCS	5/8		

WS-1168RCS

Features
- Fine tooth design with dual-pawl mechanism for extra strength.
- High-polished chrome finish cleans easily.
- Ratchet lever is easily accessible for quick direction changes.
- Recessed corners in ends provide extra turning power.

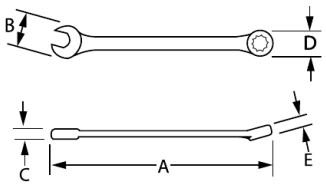

WILLIAMS

STUBBY REVERSIBLE RATCHETING COMBINATION WRENCHES

High Polish Chrome Finish, 12 Point, Metric

Product Code	Size (MM)	A Overall Length (Inches)	B Open End Width (Inches)	C Open End Thickness (Inches)	D Box End Diameter (Inches)	E Box End Thickness (Inches)
1208MRCS	8	3 1/2	23/32	5/32	23/32	9/32
1209MRCS	9	3 3/4	13/16	5/32	3/4	5/16
1210MRCS	10	3 27/32	7/8	3/16	7/8	11/32
1211MRCS	11	4 1/8	31/32	7/32	29/32	11/32
1212MRCS	12	4 1/4	1	7/32	15/16	3/8
1213MRCS	13	4 1/2	1	1/4	1	13/32
1214MRCS	14	4 11/16	1 5/32	1/4	1 3/32	13/32
1215MRCS	15	4 29/32	1 1/4	9/32	1 5/32	7/16
1216MRCS	16	5	1 3/8	9/32	1 1/4	15/32
1217MRCS	17	5 5/32	1 7/16	9/32	1 9/32	1/2
1218MRCS	18	5 1/4	1 1/2	5/16	1 3/8	1/2
1219MRCS	19	5 1/2	1 9/16	11/32	1 15/32	17/32

1213MRCS

MWS-12RCS 12 Piece Reversible Stubby Ratcheting Combination Wrench Set, Metric, in Plastic Tray

Contents Include:

Product Code	Size (MM)	Product Code	Size (MM)	Product Code	Size (MM)
1208MRCS	8	1212MRCS	12	1216MRCS	16
1209MRCS	9	1213MRCS	13	1217MRCS	17
1210MRCS	10	1214MRCS	14	1218MRCS	18
1211MRCS	11	1215MRCS	15	1219MRCS	19

MWS-12RCS

Features
- Fine tooth design with dual-pawl mechanism for extra strength.
- High-polished chrome finish cleans easily.
- Ratchet lever is easily accessible for quick direction changes.
- Recessed corners in ends provide extra turning power.

1037

WILLIAMS®

DOUBLE HEAD OPEN END WRENCHES

Chrome Satin Finish, SAE

Product Code	Size (Inches)	A Overall Length (Inches)	B Open End Width (Inches)	C Open End Thickness (Inches)	D Open End Width (Inches)	E Open End Thickness (Inches)
1020	1/4 x 5/16	4 1/16	9/16	5/32	11/16	3/16
1721	5/16 x 3/8	4 11/16	11/16	5/32	13/16	3/16
1723	3/8 x 7/16	5 5/16	13/16	3/16	15/16	7/32
1725	7/16 x 1/2	5 31/32	3/32	7/32	1 1/16	1/4
1725B	1/2 x 9/16	6 19/32	1 1/16	1/4	1 3/16	9/32
1727	9/16 x 5/8	7 9/32	1 3/16	9/32	1 5/16	9/32
1027B	5/8 x 11/16	7 31/32	1 5/16	5/16	1 7/16	5/16
1729	5/8 x 3/4	8 9/32	1 5/16	9/32	1 9/16	11/32
1729B	11/16 x 3/4	8 21/32	1 7/16	5/16	1 9/16	11/32
1731	3/4 x 13/16	9 11/32	1 9/16	11/32	1 11/16	3/8
1731A	3/4 x 7/8	9 11/16	1 19/32	11/32	1 27/32	3/8
1731B	13/16 x 7/8	10 1/32	1 11/16	3/8	1 13/16	3/8
1033A	7/8 x 15/16	10 3/4	1 13/16	3/8	1 15/16	13/32
1033C	15/16 x 1	11 1/2	1 15/16	13/32	2 1/32	13/32
1037	1 1/16 x 1 1/4	12 15/16	2 3/16	7/16	2 17/32	1/2
1037B	1 1/8 x 1 3/16	13 23/32	2 5/16	15/32	2 7/16	15/32
1038	1 1/4 x 1 5/16	15 9/32	2 9/16	1/2	2 11/16	17/32
1038A	1 3/8 x 1 7/16	16 7/8	2 13/16	17/32	2 15/16	17/32
1039B	1 1/2 x 1 5/8	18 29/32	3 1/16	9/16	3 5/16	19/32

Fed. Spec. ANSI B107.6

WS-1705A

WS-1705A 5 Piece Double Head Open End Wrench Set, SAE, in Roll Pouch – R-3

Contents Include:

Product Code	Size (Inches)	Product Code	Size (Inches)	Product Code	Size (Inches)
1723	3/8 x 7/16	1727	9/16 x 5/8	1731B	13/16 x 7/8
1725B	1/2 x 9/16	1729B	11/16 x 3/4		

WS-1710A 10 Piece Double Head Open End Wrench Set, SAE, in Roll Pouch – R-10

Contents Include:

Product Code	Size (Inches)	Product Code	Size (Inches)	Product Code	Size (Inches)
1020	1/4 x 5/16	1727	9/16 x 5/8	1037	1 1/16 x 1 1/4
1723	3/8 x 7/16	1729B	11/16 x 3/4	1037B	1 1/8 x 1 3/16
1725	7/16 x 1/2	1731B	13/16 x 7/8		
1725B	1/2 x 9/16	1033C	15/16 x 1		

WS-1710A

USA Made in U.S.A.

Features

- Two openings in each wrench with 45° chamfer on wrench ends allow easy placement of wrench on the fastener.
- Continuous arc design minimizes spreading and is stronger than "V" design.
- Satin chrome finish provides good grip and cleans easily.

WILLIAMS®

15°- 60° DOUBLE OPEN END ANGLE-HEAD WRENCHES

Chrome Satin Finish, SAE

Product Code	Size (Inches)	A Head Diameter	B Head Thickness	C Overall Length (Inches)
3712	3/8	25/32	7/32	4 3/4
3714	7/16	7/8	7/32	5
3716	1/2	1	7/32	5 1/2
3718	9/16	1 1/8	1/4	6
3720	5/8	1 3/16	9/32	6 1/4
3722	11/16	1 5/16	9/32	7
3724	3/4	1 7/16	9/32	7 1/4
3726	13/16	1 19/32	9/32	7 1/2
3728	7/8	1 21/32	9/32	8 1/4
3732	1	1 15/16	5/16	9 3/4
3734	1 1/16	2 1/16	5/16	10
3736	1 1/8	2 1/4	5/16	11
3740	1 1/4	2 3/8	11/32	11 1/2
3744	1 3/8	2 11/16	13/32	12 1/2
3746	1 7/16	2 11/16	13/32	12 1/2
3748	1 1/2	2 11/16	13/32	12 1/2
3750	1 5/8	3 13/64	15/32	15 3/4
3754	1 11/16	3 11/32	1/2	16 1/2
3756	1 3/4	3 7/16	17/32	17
3758	1 13/16	3 9/16	17/32	17 3/4
3760	1 7/8	3 11/16	9/16	18 1/2
3764	2	3 15/16	19/32	19 1/4

Fed. Spec. ANSI B107.39 Type 2 Class 3

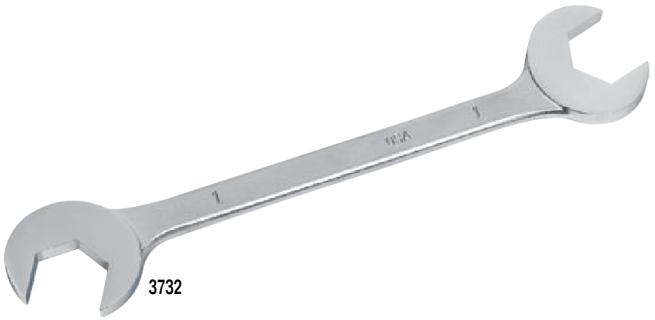

3732

3780 5 Piece Double Open End Wrench Set, SAE, in Roll Pouch

Contents Include:

Product Code	Size (Inches)	Product Code	Size (Inches)
3712	3/8	3718	9/16
3714	7/16	3720	5/8
3716	1/2		

3780

3782 10 Piece Double Open End Wrench Set, SAE, in Roll Pouch

Contents Include:

Product Code	Size (Inches)	Product Code	Size (Inches)
3712	3/8	3722	11/16
3714	7/16	3724	3/4
3716	1/2	3726	13/16
3718	9/16	3728	7/8
3720	5/8	3732	1

Made in U.S.A.

Features

- Wrench heads are offset at 15° and 60° to the handle
- Both ends are the same size to permit the wrench to be used in four different positions
- 45° chamfer on wrench ends allow easy placement of wrench on the fastener
- Continuous arc design minimizes spreading and is stronger than "V" design
- Thin head is perfect for tight clearances
- Satin chrome finish provides good grip and cleans easily

3782

EWM-1618

WILLIAMS®

DOUBLE HEAD OPEN END WRENCHES

Chrome Satin Finish, Metric

Product Code	Size (MM)	A Overall Length (Inches)	B Open End Width (Inches)	C Open End Thickness (Inches)	D Open End Width (Inches)	E Open End Thickness (Inches)
EWM-0607	6 x 7	3 13/16	17/32	5/32	19/32	5/32
EWM-0708	7 x 8	4 3/16	19/32	5/32	11/16	3/16
EWM-0910	9 x 10	5	3/4	3/16	27/32	7/32
EWM-1011	10 x 11	5 3/8	27/32	7/32	15/16	7/32
EWM-1213	12 x 13	6 3/16	1	1/4	1 3/32	1/4
EWM-1415	14 x 15	7 1/32	1 1/32	9/32	1 1/4	9/32
EWM-1618	16 x 18	8 3/32	1 5/16	5/16	1 15/32	11/32
EWM-1719	17 x 19	8 17/32	1 13/32	5/16	1 9/16	11/32
EWM-2124	21 x 24	10 17/32	1 23/32	3/8	1 15/16	13/32
EWM-2224	22 x 24	10 3/4	1 13/16	3/8	1 15/16	13/32
EWM-2427	24 x 27	11 29/32	1 15/16	13/32	2 3/16	7/16
EWM-2730	27 x 30	13 5/16	2 3/16	7/16	2 7/16	15/32
EWM-3032	30 x 32	14 1/2	2 7/16	15/32	2 9/16	1/2

MWS-26

Fed. Spec. ANSI B107.9M

MWS-26 6 Piece Double Head Open End Wrench Set, Metric, in Roll Pouch – R-42

Contents Include:

Product Code	Size (MM)	Product Code	Size (MM)	Product Code	Size (MM)
EWM-0708	7 x 8	EWM-1213	12 x 13	EWM-1618	16 x 18
EWM-1011	10 x 11	EWM-1415	14 x 15	EWM-1719	17 x 19

MWS-31

MWS-31 10 Piece Double Head Open End Wrench Set, Metric, in Roll Pouch – R-11

Contents Include:

Product Code	Size (MM)	Product Code	Size (MM)	Product Code	Size (MM)
EWM-0607	6 x 7	EWM-1415	14 x 15	EWM-2427	24 x 27
EWM-0708	7 x 8	EWM-1618	16 x 18	EWM-2730	27 x 30
EWM-1011	10 x 11	EWM-1719	17 x 19		
EWM-1213	12 x 13	EWM-2124	21 x 24		

Features

- Two openings in each wrench with 45° chamfer on wrench ends allow easy placement of wrench on the fastener.
- Continuous arc design minimizes spreading and is stronger than "V" design.
- Satin chrome finish provides good grip and cleans easily.

Made in U.S.A.

OES-1011

WILLIAMS®

SHORT DOUBLE HEAD OPEN END WRENCHES

Chrome Satin Finish, SAE

Product Code	Size (Inches)	A Overall Length (Inches)	B Open End Width (Inches)	C Open End Thickness (Inches)	D Open End Width (Inches)	E Open End Thickness (Inches)
OES-0607	3/16 x 7/32	2 27/32	13/32	1/8	15/32	1/8
OES-0809	1/4 x 9/32	3 5/32	1/2	1/8	9/16	1/8
OES-1011	5/16 x 11/32	3 7/16	5/8	5/32	11/16	1/8
OES-1214	3/8 x 7/16	3 3/4	3/4	5/32	29/32	1/8
OES-1618	1/2 x 9/16	4 11/32	1	3/16	1 1/8	3/16

WS-1605

Fed. Spec. ANSI B107.6

WS-1605 5 Piece Short Double Head Open End Wrench Set, SAE, in Roll Pouch – R-1

Contents Include:

Product Code	Size (Inches)	Product Code	Size (Inches)	Product Code	Size (Inches)
OES-0607	3/16 x 7/32	OES-1011	5/16 x 11/32	OES-1618	1/2 x 9/16
OES-0809	1/4 x 9/32	OES-1214	3/8 x 7/16		

Features

- Two openings in each wrench with 45° chamfer on wrench ends allow easy placement of wrench on the fastener.
- Continuous arc design minimizes spreading and is stronger than "V" design.
- Satin chrome finish provides good grip and cleans easily.

Made in U.S.A.

WILLIAMS®

30° SERVICE WRENCHES, SAE

Satin Chrome Finish, SAE

Product Code	Size (Inches)	Overall Length (Inches)	Head Diameter	Head Thickness
3524	3/4	6 1/4	1 11/16	1/4
3526	13/16	6 1/4	1 11/16	1/4
3528	7/8	6 1/4	1 11/16	1/4
3530	15/16	6 7/8	1 7/8	1/4
3532	1	6 7/8	1 7/8	1/4
3534	1 1/16	6 7/8	1 7/8	1/4
3536	1 1/8	7	2 1/16	1/4
3538	1 3/16	7	2 1/16	1/4
3540	1 1/4	7	2 1/16	1/4
3542	1 5/16	7 5/8	2 1/2	9/32
3544	1 3/8	7 5/8	2 1/2	9/32
3546	1 7/16	7 5/8	2 1/2	9/32
3548	1 1/2	7 5/8	2 1/2	9/32
3550	1 9/16	7 5/8	2 5/8	9/32
3552	1 5/8	7 5/8	2 5/8	9/32
3554	1 11/16	7 5/8	2 5/8	9/32
3556	1 3/4	8 1/2	3 1/8	5/16
3558	1 13/16	8 1/2	3 1/8	5/16
3560	1 7/8	8 1/2	3 1/8	5/16
3562	1 15/16	8 1/2	3 1/8	5/16
3564	2	8 1/2	3 1/2	5/16
3568	2 1/8	8 1/2	3 1/2	5/16
3572	2 1/4	8 1/2	3 1/2	5/16
3576	2 3/8	9 1/2	3 1/2	5/16

Fed. Spec: GGG-W-636E Type 17 Class 3

3542

WS-3510 10 Piece Service Wrench Set, SAE in Roll Pouch - R-13

Contents Include:

Product Code	Size (MM)	Product Code	Size (MM)
3524	3/4	3534	1 1/16
3526	13/16	3536	1 1/8
3528	7/8	3538	1 3/16
3530	15/16	3540	1 1/4
3532	1	3544	1 3/8

Made in U.S.A.

WS-3510

Features

- Ultra thin pattern for use on jam nuts and access to confined areas
- 30° offset head
- Satin chrome finish

3537M

MWS-3510

WILLIAMS®

30° SERVICE WRENCHES, METRIC

Satin Chrome Finish, Metric

Product Code	Size (Inches)	Overall Length (Inches)	Head Diameter	Head Thickness
3519M	19	6 1/4	1 1/16	1/4
3521M	21	6 1/4	1 1/16	1/4
3522M	22	6 1/4	1 1/16	1/4
3524M	24	6 7/8	1 7/8	1/4
3527M	27	6 7/8	1 7/8	1/4
3530M	30	7	2 1/16	1/4
3532M	32	7	2 1/16	1/4
3536M	36	7 5/8	2 1/2	9/32
3537M	37	7 5/8	2 1/2	9/32
3538M	38	7 5/8	2 1/2	9/32
3540M	40	7 5/8	2 5/8	9/32
3541M	41	7 5/8	2 5/8	9/32
3542M	42	7 5/8	2 5/8	9/32
3544M	44	7 5/8	2 5/8	9/32
3546M	46	8 1/2	3 1/8	5/16
3548M	48	8 1/2	3 1/8	5/16
3550M	50	8 1/2	3 1/8	5/16
3552M	52	8 1/2	3 1/2	5/16
3555M	55	8 1/2	3 1/2	5/16
3560M	60	9 1/2	3 1/2	5/16
3565M	65	9 1/2	3 1/2	5/16

Fed. Spec: GGG-W-636E Type 17 Class 3

MWS-3510 10 Piece Service Wrench Set, MM in Roll Pouch - R-13

Contents Include:

Product Code	Size (MM)	Product Code	Size (MM)
3519M	19	3530M	30
3521M	21	3532M	32
3522M	22	3536M	36
3524M	24	3538M	38
3527M	27	3540M	40

Made in U.S.A.

Features

- Ultra thin pattern for use on jam nuts and access to confined areas
- 30° offset head
- Satin chrome finish

WILLIAMS®

MINIATURE 15° X 75° DOUBLE HEAD OPEN END WRENCHES

High Polish Chrome Finish, SAE

Product Code	Size (Inches)	A Overall Length (Inches)	B Open End Width (Inches)	C Open End Thickness (Inches)	D Open End Width (Inches)	E Open End Thickness (Inches)
1112	3/16	3 1/8	15/32	1/8	15/32	1/8
1113	13/64	3 1/8	15/32	1/8	15/32	1/8
1114	7/32	3 1/8	15/32	1/8	15/32	1/8
1115	15/64	3 1/8	15/32	1/8	15/32	1/8
1116	1/4	3 1/8	15/32	1/8	15/32	1/8
1118	9/32	3 5/8	9/16	1/8	9/16	1/8
1120	5/16	3 5/8	9/16	1/8	9/16	1/8
1122	11/32	4 1/8	3/4	5/32	3/4	5/32
1124	3/8	4 1/8	3/4	5/32	3/4	5/32
1128	7/16	4 5/8	29/32	3/16	29/32	3/16
1132	1/2	4 9/16	29/32	3/16	29/32	3/16
1136	9/16	5 3/32	1 1/8	3/16	1 1/8	3/16
1140	5/8	5 1/16	1 1/8	3/16	1 1/8	3/16

1122

WS-1113C 10 Piece Mini Open End Wrench & Plier Set, SAE, in Roll Pouch – R-36

Contents Include:

Product Code	Size (Inches)	Product Code	Size (Inches)	Product Code	Size (Inches)
1112	3/16	1116	1/4	1124	3/8
1113	13/64	1118	9/32	PL-1519C	5" SUPERJOINT® Utility Pliers
1114	7/32	1120	5/16		
1115	15/64	1122	11/32		

WS-1113C

WS-1142PC 14 Piece Mini Open End Wrench & Plier Set, SAE, in Roll Pouch – R-20

Contents Include:

Product Code	Size (Inches)	Product Code	Size (Inches)	Product Code	Size (Inches)
1112	3/16	1118	9/32	1132	1/2
1113	13/64	1120	5/16	1136	9/16
1114	7/32	1122	11/32	1140	5/8
1115	15/64	1124	3/8	PL-1519C	5" SUPERJOINT® Utility Pliers
1116	1/4	1128	7/16		

Made in U.S.A.

Features

- Excellent for fast turning of fasteners in limited clearance areas.
- Each wrench has the same size opening at both ends.
- 15° x 75° angled wrench openings permit maximum versatility in tight areas.

WS-1142PC

WILLIAMS®

12 F

DOUBLE HEAD 10° OFFSET BOX END WRENCHES

Chrome Satin Finish, 12 Point, SAE

Product Code	Size (Inches)	A Overall Length (Inches)	B Box End Diameter (Inches)	C Box End Thickness (Inches)	D Box End Diameter (Inches)	E Box End Thickness (Inches)
7723	3/8 x 7/16	7 5/8	19/32	5/16	21/32	11/32
7725B	1/2 x 9/16	8 11/16	3/4	3/8	27/32	3/8
7727A	5/8 x 11/16	10 5/32	29/32	7/16	1	15/32
7029B	11/16 x 3/4	10 15/16	1	15/32	1 3/32	1/2
7731A	3/4 x 7/8	12 1/32	1 3/32	1/2	1 1/4	9/16
7731B	13/16 x 7/8	12 13/32	1 3/16	17/32	1 1/4	9/16
7033C	15/16 x 1	14 1/8	1 11/32	19/32	1 7/16	5/8
7038	1 1/8 x 1 3/16	16 3/32	1 19/32	11/16	1 11/16	11/16
7039B	1 1/4 x 1 5/16	17 5/8	1 25/32	23/32	1 27/32	3/4

7725B

Fed. Spec. ANSI B107.6

WS-7707 7 Piece Double Head 10° Offset Box End Wrench Set, SAE, in Roll Pouch – R-23

Contents Include:

Product Code	Size (Inches)	Product Code	Size (Inches)	Product Code	Size (Inches)
7723	3/8 x 7/16	7029B	11/16 x 3/4	7033C	15/16 x 1
7725B	1/2 x 9/16	7731A	3/4 x 7/8		
7727A	5/8 x 11/16	7731B	13/16 x 7/8		

USA Made in U.S.A.

Features

- SUPERTORQUE® box opening design allows application of higher torque without rounding or deforming hex fastener points. No contact is made at the corners. Instead, wrenching forces are placed on the flat surfaces behind the points.
- 10° offset box end allows clearance in tight areas.
- Sizes are clearly marked on handle ends.

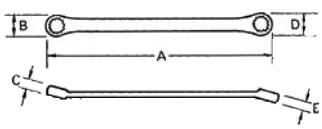

WS-7707

WILLIAMS®

12 M

DOUBLE HEAD 10° OFFSET BOX END WRENCHES

Chrome Satin Finish, 12 Point, Metric

Product Code	Size (MM)	A Overall Length (Inches)	B Box End Diameter (Inches)	C Box End Thickness (Inches)	D Box End Diameter (Inches)	E Box End Thickness (Inches)
BWM-0810	8 x 10	7 5/16	1/2	9/32	19/32	5/16
BWM-1011	10 x 11	7 31/32	19/32	5/16	21/32	11/32
BWM-1012	10 x 12	8 3/16	19/32	5/16	23/32	11/32
BWM-1113	11 x 13	8 5/8	21/32	11/32	25/32	3/8
BWM-1213	12 x 13	8 27/32	25/32	11/32	25/32	3/8
BWM-1214	12 x 14	9 1/16	23/32	11/32	13/16	13/32
BWM-1315	13 x 15	9 1/2	25/32	3/8	7/8	13/32
BWM-1415	14 x 15	9 3/4	13/16	13/32	7/8	13/32
BWM-1417	14 x 17	9 25/32	13/16	13/32	31/32	15/32
BWM-1618	16 x 18	10 27/32	15/16	7/16	1 1/32	15/32
BWM-1719	17 x 19	11 9/32	31/32	15/32	1 3/32	1/2
BWM-1821	18 x 21	11 15/16	1 3/32	15/32	1 3/16	17/32
BWM-1922	19 x 22	12 3/8	1 3/32	1/2	1 1/4	9/16
BWM-2124	21 x 24	13 1/4	1 3/16	17/32	1 11/32	19/32
BWM-2224	22 x 24	13 15/32	1 1/4	9/16	1 11/32	19/32
BWM-2427	24 x 27	14 19/32	1 11/32	19/32	1 17/32	21/32
BWM-2730	27 x 30	15 29/32	1 17/32	21/32	1 11/16	11/16
BWM-3032	30 x 32	17 1/32	1 11/16	11/16	1 25/32	23/32

Fed. Spec. ANSI B107.9M

BWM-1012

MWS-BWM10 10 Piece Double Head 10° Offset Box End Wrench Set, Metric, in Roll Pouch – R-11

Contents Include:

Product Code	Size (MM)	Product Code	Size (MM)	Product Code	Size (MM)
BWM-0810	8 x 10	BWM-1618	16 x 18	BWM-2730	27 x 30
BWM-1113	11 x 13	BWM-1719	17 x 19	BWM-3032	30 x 32
BWM-1214	12 x 14	BWM-1922	19 x 22		
BWM-1415	14 x 15	BWM-2124	21 x 24		

MWS-BWM10

MWS-BWM12 12 Piece Double Head 10° Offset Box End Wrench Set, Metric, in Roll Pouch – R-49

Contents Include:

Product Code	Size (MM)	Product Code	Size (MM)	Product Code	Size (MM)
BMW-1011	10 x 11	BWM-1417	14 x17	BWM-1922	19 x 22
BWM-1214	12 x 14	BWM-1618	16 x 18	BWM-2224	22 x 24
BWM-1315	13 x 15	BWM-1719	17 x 19	BWM-2730	27 x 30
BWM-1415	14 x 15	BWM-1821	18 x 21	BWM-3032	30 x 32

USA
Made in U.S.A.

Features

- SUPERTORQUE® box opening design allows application of higher torque without rounding or deforming hex fastener points. No contact is made at the corners. Instead, wrenching forces are placed on the flat surfaces behind the points.
- 10° offset box end allows clearance in tight areas.
- Sizes are clearly marked on handle ends.

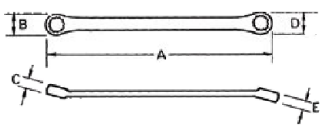

MWS-BWM12

8725B

WS-8707

WILLIAMS®

DOUBLE HEAD 60° OFFSET BOX END WRENCHES

Chrome Satin Finish, 12 Point, SAE

Product Code	Size (Inches)	A Overall Length (Inches)	B Box End Diameter (Inches)	C Box End Thickness (Inches)	D Box End Diameter (Inches)	E Box End Thickness (Inches)
8720	1/4 x 5/16	6 7/16	13/32	1/4	15/32	9/32
8723	3/8 x 7/16	7 5/8	9/16	5/16	21/32	5/16
8725	7/16 x 1/2	8 3/16	21/32	11/32	3/4	11/32
8725B	1/2 x 9/16	8 25/32	3/4	3/8	27/32	3/8
8727	9/16 x 5/8	9 3/8	27/32	13/32	29/32	13/32
8727A	5/8 x 11/16	9 31/32	29/32	7/16	1	7/16
8729	5/8 x 3/4	10 1/4	15/16	7/16	1 3/32	7/16
8729A	11/16 x 13/16	10 27/32	1	15/32	1 3/16	15/32
8731A	3/4 x 7/8	11 7/16	1 3/32	17/32	1 9/32	17/32
8033A	7/8 x 15/16	13	1 9/32	9/16	1 3/8	9/16
8033C	15/16 x 1	13 31/32	1 3/8	19/32	1 7/16	19/32

Fed. Spec. ANSI B107.6

WS-8707 7 Piece Double Head 60° Offset Box End Wrench Set, SAE, in Roll Pouch – R-23

Contents Include:

Product Code	Size (Inches)	Product Code	Size (Inches)	Product Code	Size (Inches)
8720	1/4 x 5/16	8729	5/8 x 3/4	8033C	15/16 x 1
8723	3/8 x 7/16	8729A	11/16 x 13/16		
8725B	1/2 x 9/16	8731A	3/4 x 7/8		

Made in U.S.A.

Features

- SUPERTORQUE® box opening design allows application of higher torque without rounding or deforming hex fastener points. No contact is made at the corners. Instead, wrenching forces are placed on the flat surfaces behind the points.
- 60° offset box end allows extra knuckle and bolt clearance in tight areas.
- Sizes are clearly marked on handle ends.

RB-52

WILLIAMS®

SINGLE HEAD RATCHETING BOX WRENCHES

High Polish Chrome Finish, 12 Point, SAE

Product Code	Size (Inches)	A Overall Length (Inches)	Product Code	Size (Inches)	A Overall Length (Inches)
RB-42	1 5/16	15 1/2	RB-54	1 11/16	19
RB-44	1 3/8	15 1/2	RB-56	1 3/4	19
RB-46	1 7/16	15 1/2	RB-58	1 13/16	19
RB-48	1 1/2	15 1/2	RB-60	1 7/8	19
RB-50	1 9/16	15 1/2	RB-64	2	19
RB-52	1 5/8	15 1/2	RB-68	2 1/8	19

Made in U.S.A.

Features

- Combines the quick ratcheting action with opening sizes large enough to handle most industrial applications.
- Requires less effort than a conventional combination wrench.
- All wrenches contain 12-point Torque Grip® wheels.
- Ideal for long "bolt-through" applications.

WILLIAMS®

12 M

SINGLE HEAD RATCHETING BOX WRENCHES

High Polish Chrome Finish, 12 Point, Metric

Product Code	Size (MM)	A Overall Length (Inches)	Product Code	Size (MM)	A Overall Length (Inches)
RBM-22	22	12	RBM-27	27	12
RBM-23	23	12	RBM-29	29	12
RBM-24	24	12	RBM-30	30	12
RBM-25	25	12	RBM-32	32	15½
RBM-26	26	12	RBM-36	36	15½

Made in U.S.A.

RBM-52

Features

- Combines the quick ratcheting action with opening sizes large enough to handle most industrial applications.
- Requires less effort than a conventional combination wrench.
- All wrenches contain 12-point Torque Grip® wheels.
- Ideal for long "bolt-through" applications.

RB-1618

WILLIAMS®

6 12 F

DOUBLE HEAD RATCHETING BOX WRENCHES

High Polish Chrome Finish, 6 & 12 Point, SAE

Product Code	Number of Points	Size (Inches)	A Overall Length (Inches)	B Box End Diameter (Inches)	C Box End Thickness (Inches)	D Box End Diameter (Inches)	E Box End Thickness (Inches)
RB-810	6	¼ x 5/16	4 ¼	19/32	⅜	11/16	⅜
RB-1214	6	⅜ x 7/16	5 ½	25/32	⅜	⅞	⅜
RB-1618	6	½ x 9/16	6 ¾	1	½	1 5/32	½
RB-1820	12	9/16 x ⅝	8 ⅛	1 5/16	½	1 7/16	½
RB-2022	12	⅝ x 11/16	8 ⅛	1 5/16	½	1 7/16	½
RB-2024	12	⅝ x ¾	8 ⅛	1 5/16	½	1 7/16	½
RB-2428	12	¾ x ⅞	9 ¼	1 13/32	½	1 9/16	½
RB-3036	12	15/16 x 1 ⅛	15 ⅛	1 21/32	9/16	2 9/32	9/16
RB-3440	12	1 1/16 x 1 ¼	15 ⅛	1 29/32	9/16	2 9/32	9/16

WS-12 5 Piece Ratcheting Box Wrench Set, 6 & 12 Point, SAE, in Roll Pouch – R-3

Contents Include:

Product Code	Size (Inches)	Product Code	Size (Inches)	Product Code	Size (Inches)
RB-810	¼ x 5/16	RB-1618	½ x 9/16	RB-2428	¾ x ⅞
RB-1214	⅜ x 7/16	RB-2022	⅝ x 11/16		

Made in U.S.A.

Features

- Allows fast removal of fasteners with a ratcheting action at each end.
- Ideal for long "bolt-through" applications.
- Flat handle allows access to tight clearance areas.

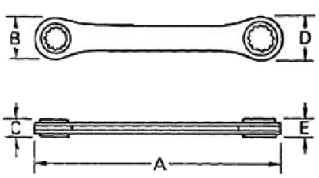

WS-12

RBM-1314

MWS-30

WILLIAMS

DOUBLE HEAD RATCHETING BOX WRENCHES

High Polish Chrome Finish, 6 & 12 Point, Metric

Product Code	Number of Points	Size (MM)	A Overall Length (Inches)	B Box End Diameter (Inches)	C Box End Thickness (Inches)	D Box End Diameter (Inches)	E Box End Thickness (Inches)
RBM-0708	6	7 x 8	4 1/2	11/16	3/8	11/32	3/8
RBM-0910	6	9 x 10	5 1/2	7/8	3/8	7/8	3/8
RBM-1112	6	11 x 12	6 7/8	1 3/16	1/2	1 1/8	1/2
RBM-1314	6	13 x 14	6 7/8	1 3/16	1/2	1 1/8	1/2
RBM-1517	12	15 x 17	8 1/8	1 7/16	1/2	1 7/16	1/2
RBM-1618	12	16 x 18	8 1/8	1 7/16	1/2	1 7/16	1/2
RBM-1921	12	19 x 21	9 1/4	1 9/16	1/2	1 9/16	1/2

MWS-30 5 Piece Ratcheting Box Wrench Set, 6 & 12 Point, Metric, in Roll Pouch – R-3

Contents Include:

Product Code	Size (MM)	Product Code	Size (MM)	Product Code	Size (MM)
RBM-0708	7 x 8	RBM-1112	11 x 12	RBM-1517	15 x 17
RBM-0910	9 x 10	RBM-1314	13 x 14		

Features

- Allows fast removal of fasteners with a ratcheting action at each end.
- Ideal for long "bolt-through" applications.
- Flat handle allows access to tight clearance areas.

Made in U.S.A.

RBO-1618

WS-5

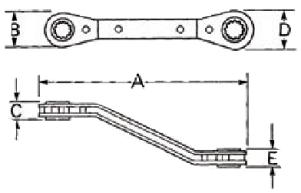

WILLIAMS

DOUBLE HEAD 25° OFFSET RATCHETING BOX WRENCHES

High Polish Chrome Finish, 12 Point, SAE

Product Code	Size (Inches)	A Overall Length (Inches)	B Box End Diameter (Inches)	C Box End Thickness (Inches)	D Box End Diameter (Inches)	E Box End Thickness (Inches)
RBO-810	1/4 x 5/16	4 1/4	19/32	3/8	21/32	3/8
RBO-1214	3/8 x 7/16	5 7/16	25/32	3/8	7/8	3/8
RBO-1618	1/2 x 9/16	6 3/4	1	1/2	1 5/32	1/2
RBO-2022	5/8 x 11/16	8	1 5/16	1/2	1 7/16	1/2
RBO-2024	5/8 x 3/4	8	1 5/16	1/2	1 7/16	1/2
RBO-2226	11/16 x 13/16	9 1/8	1 13/32	1/2	1 9/16	1/2
RBO-2428	3/4 x 7/8	9 1/8	1 13/32	1/2	1 9/16	1/2
RBO-2630	13/16 x 15/16	9 1/8	1 13/32	1/2	1 9/16	1/2

WS-5 5 Piece Offset Ratcheting Box Wrench Set, 12 Point, SAE, in Roll Pouch – R-3

Contents Include:

Product Code	Size (Inches)	Product Code	Size (Inches)	Product Code	Size (Inches)
RBO-810	1/4 x 5/16	RBO-1618	1/2 x 9/16	RBO-2428	3/4 x 7/8
RBO-1214	3/8 x 7/16	RBO-2022	5/8 x 11/16		

Features

- 25° offset handle clears obstructions that flat handle wrenches cannot.
- Allows fast removal of fasteners with a ratcheting action at each end.
- Ideal for long "bolt-through" applications.

Made in U.S.A.

WILLIAMS

RATCHETING FLARE NUT WRENCHES

Black Industrial Finish, 12 Point, SAE

Product Code	Size (Inches)	Overall Length (Inches)	Head Diameter (Inches)	Head Thickness (Inches)
RFW-12	3/8	5 3/8	1	5/16
RFW-14	7/16	5 3/8	1	5/16
RFW-16	1/2	5 3/8	1	5/16
RFW-18	9/16	7 1/4	1 1/32	3/8
RFW-20	5/8	7 1/4	1 1/32	3/8
RFW-22	11/16	7 1/4	1 1/32	3/8
RFW-24	3/4	7 1/4	1 1/32	3/8
RFW-26	13/16	9 5/16	1 5/8	1/2
RFW-28	7/8	9 5/16	1 5/8	1/2
RFW-30	15/16	9 5/16	1 5/8	1/2
RFW-32	1	9 5/16	1 5/8	1/2

Made in U.S.A.

RFW-24

Features

- Designed for use on 6 and 12 point tube fittings, fasteners, valves and compression fittings.
- Unique design requires only 30° rotation for ratcheting action.
- High carbon steel jaws snap open, then close around fastener with 6 point contact.
- Prevents distortion of thin-walled fitting.
- Allow easy access to tight locations.

WILLIAMS

DOUBLE HEAD FLARE NUT WRENCHES

Chrome Satin Finish, 6 Point, SAE

Product Code	Size (Inches)	A Overall Length (Inches)	B Open End Dia (Inches)	C Open End Thickness (Inches)	D Open End Dia (Inches)	E Open End Thickness (Inches)
XFN-0810	1/4 x 5/16	4 27/32	19/32	1/4	5/8	9/32
XFN-1214	3/8 x 7/16	5 13/16	25/32	5/16	27/32	11/32
XFN-1618	1/2 x 9/16	6 13/16	15/16	3/8	1	13/32
XFN-2022	5/8 x 11/16	7 3/4	1 3/32	7/16	3/16	15/32
XFN-2432	3/4 x 1	9 1/2	1 1/4	1/2	19/32	5/8
XFN-2836	7/8 x 1 1/8	10.5	1 7/16	9/16	1 3/4	11/16

XFN-1618

Fed. Spec.: ANSI B107.6

WS-14 5 Piece Double Head Flare Nut Wrench Set, 6 Point, SAE, in Roll Pouch – R-4

Contents Include:

Product Code	Size (Inches)	Product Code	Size (Inches)	Product Code	Size (Inches)
XFN-1214	3/8 x 7/16	XFN-2022	5/8 x 11/16	XFN-2836	7/8 x 1 1/8
XFN-1618	1/2 x 9/16	XFN-2432	3/4 x 1		

Made in U.S.A.

WS-14

Features

- Will not mar fittings on pipes and tubing.
- Satin chrome textured finish provides great feel and extra gripping power.
- Recessed corners in ends provide extra turning power.

10600

11690

11691

WILLIAMS®

DOUBLE HEAD FLARE NUT WRENCHES

Chrome Satin Finish, 6 Point, SAE

Product Code	Size (Inches)	A Overall Length (Inches)	B Open End Dia (Inches)	C Open End Thickness (Inches)	D Open End Dia (Inches)	E Open End Thickness (Inches)
10600	3/8 x 7/16	6	27/32	11/32	15/16	11/32
10602	1/2 x 9/16	6 3/4	15/16	13/32	1	13/32
10604	5/8 x 11/16	7 3/4	1 3/32	7/16	1 3/16	15/32
10606	3/4 x 7/8	8 5/8	1 9/32	0.5	1 13/32	17/32

Fed. Spec.: ANSI B107.6

11690 4 Piece Double Head Flare Nut Wrench Set, 6 Point, SAE, in Vinyl Pouch – 50001

Contents Include:

Product Code	Size (Inches)	Product Code	Size (Inches)
10600	3/8 x 7/16	10604	5/8 x 11/16
10602	1/2 x 9/16	10606	3/4 x 7/8

11691 3 Piece Double Head Flare Nut Wrench Set, 6 Point, SAE, in Vinyl Pouch – 50001

Contents Include:

Product Code	Size (Inches)	Product Code	Size (Inches)
10600	3/8 X 7/16	10604	5/8 X 11/16
10602	1/2 X 9/16		

Features

- Will not mar fittings on pipes and tubing.
- Satin chrome textured finish provides great feel and extra gripping power.
- Recessed corners in ends provide extra turning power.

10650

11692

WILLIAMS®

DOUBLE HEAD FLARE NUT WRENCHES

Chrome Satin Finish, 6 Point, Metric

Product Code	Size (MM)	A Overall Length (Inches)	B Open End Dia (Inches)	C Open End Thickness (Inches)	D Open End Dia (Inches)	E Open End Thickness (Inches)
10650	9 x 11	5 11/16	13/16	11/32	15/16	5/16
10652	10 x 12	6 1/8	7/8	3/8	29/32	5/16
10654	13 x 14	6 7/8	1	3/8	1 3/32	3/8
10656	15 x 17	7 7/8	1 1/16	7/16	1 7/32	1/2
10658	19 x 21	8 7/8	1 9/32	1/2	1 13/32	17/32

Fed. Spec.: ANSI B107.9M

11692 5 Piece Double Head Flare Nut Wrench Set, 6 Point, Metric, in Vinyl Pouch – 50001

Contents Include:

Product Code	Size (MM)	Product Code	Size (MM)	Product Code	Size (MM)
10650	9 x 11	10654	13 x 14	10658	19 x 21
10652	10 x 12	10656	15 x 17		

Features

- Will not damage fittings on pipes and tubing.
- Satin chrome textured finish provides great feel and extra gripping power.
- Recessed corners in ends provide extra turning power.

BAHCO

BIG-MOUTH ERGO® ADJUSTABLE WRENCHES

Designed According to Bahco's Scientific 11-Step Ergonomic Design Program

Product Code	Length (Inches)	Maximum Jaw Opening (Inches)	Head Thickness (Inches)	Jaw Tip Thickness (Inches)
Chrome Finish:				
9031 RC US	8	1 1/2	1/2	1/4
Black Phosphate Finish:				
9029 R US	6	1 1/4	1/2	3/16
9031 R US	8	1 1/2	1/2	1/4
9031-T US	8	1 1/2	11/64	1/4
9033 R US	10	1 3/4	5/16	3/4
9035 R US	12	2 3/16	3/8	7/8

Features

- Extra-wide opening jaws with shorter handle for maximum access in confined areas.
- True ergo® design, with thermoplastic handle and larger grip width.
- Ideal for plumbers, electricians, and maintenance workers.
- Slim head with tapered jaws combine easy accessibility with extra turning strength.
- Perfect for working under the sink, within enclosures, or anywhere that a short handle is needed.
- Precision hardened and anti-corrosion treated.
- Measurement scale on head conveniently shows fastener size.
- 9031-T US - 45% wider opening and 45% thinner jaw

ergo

9031 RC US

9029 R US

9031 R US

BAHCO

ERGO® COMBINATION ADJUSTABLE/PIPE WRENCHES

Designed According to Bahco's Scientific 11-Step Ergonomic Design Program

Product Code	Length (Inches)	Maximum Jaw Opening (Inches)	Head Thickness (Inches)	Max Pipe Diameter (Inches)
Chrome Finish:				
9070 RPC US	6	13/16	7/16	3/8
9071 RPC US	8	1 1/16	1/2	1/2
9072 RPC US	10	1 5/16	5/8	5/8
9073 RPC US	12	1 3/8	11/16	11/16
Black Phosphate Finish:				
9070 RP US	6	13/16	7/16	3/8
9071 RP US	8	1 1/16	1/2	1/2
9072 RP US	10	1 5/16	5/8	5/8
9073 RP US	12	1 3/8	11/16	11/16

Features

- Unique reversible jaw combines the functions of an adjustable and pipe wrenches. Simply reverse the jaw to change the grip.
- Teeth are aggressively angled to provide maximum gripping power.
- True ergo® design, with thermoplastic handle and larger grip width.
- Ideal for plumbers, electricians, and maintenance workers.
- Slim head with tapered jaws combine easy accessibility with extra turning strength.
- Precision hardened and anti-corrosion treated.
- Measurement scale on head conveniently shows fastener size.

ergo

9072 RPC US

9072 RP US

9072 RC US

9072 R US

8072 RC US

8072 R US

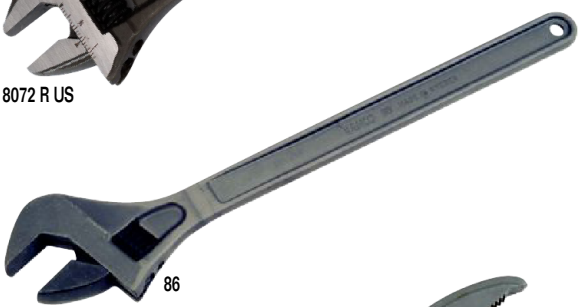
86

31 R US

BAHCO

ERGO® ADJUSTABLE WRENCHES

Designed According to Bahco's Scientific 11-Step Ergonomic Design Program

Product Code	Length (Inches)	Maximum Jaw Opening (Inches)	Head Thickness (Inches)	Jaw Tip Thickness (Inches)
Chrome Finish:				
9070 RC US	6	3/4	7/16	3/16
9071 RC US	8	1 1/16	1/2	1/4
9072 RC US	10	1 3/16	5/8	5/16
9073 RC US	12	1 5/16	11/16	7/16
Black Phosphate Finish:				
9070 R US	6	3/4	7/16	3/16
9071 R US	8	1 1/16	1/2	1/4
9072 R US	10	1 3/16	5/8	5/16
9073 R US	12	1 5/16	11/16	7/16

Features

- True ergo® design, with thermoplastic handle and larger grip width.
- Ideal for plumbers, electricians, and maintenance workers.
- Slim head with tapered jaws combine easy accessibility with extra turning strength.
- Precision hardened and anti-corrosion treated.
- Measurement scale on head conveniently shows fastener size.

BAHCO

ADJUSTABLE WRENCHES

Industrial Grade Steel Handles

Product Code	Length (Inches)	Maximum Jaw Opening (Inches)	Head Thickness (Inches)	Jaw Tip Thickness (Inches)
Chrome Finish:				
8069 RC US	4	1/2	3/8	1/8
8070 RC US	6	3/4	7/16	3/16
8071 RC US	8	1 1/16	1/2	1/4
8072 RC US	10	1 1/8	5/8	5/16
8073 RC US	12	1 5/16	11/16	7/16
8074 RC US	15	1 11/16	13/16	9/16
8075 RC US	18	2 1/16	7/8	11/16
Black Phosphate Finish:				
8069 R US	4	1/2	3/8	1/8
8070 R US	6	3/4	7/16	3/16
8071 R US	8	1 1/16	1/2	1/4
8072 R US	10	1 1/8	5/8	5/16
8073 R US	12	1 5/16	11/16	7/16
8074 R US	15	1 11/16	13/16	9/16
8075 R US	18	2 1/16	7/8	11/16
86	24	2 7/16	1 1/16	1 1/16
87	30	3 5/16	1 3/16	1 3/16

Features

- Slim head with tapered jaws combine easy accessibility with extra turning strength.
- Measurement scale on head conveniently shows fastener size (except for 24" and 30" wrenches).
- Precision hardened and anti-corrosion treated.

BAHCO

ALLIGATOR ADJUSTABLE WRENCH

Industrial Grade Steel Handle, Black Phosphate Finish

Product Code	Length (Inches)	Maximum Jaw Opening (Inches)	Head Thickness (Inches)	Jaw Tip Thickness (Inches)
31 R US	8	1 1/4	1/2	3/16

Features

- V-jaw on wrench has aggressively angled teeth for sure grip on pipes and rounded fasteners.
- Measurement scale on head conveniently shows fastener size.
- Slim head with tapered jaws combine easy accessibility with extra turning strength.
- Precision hardened and anti-corrosion treated.

WILLIAMS

ADJUSTABLE WRENCH

Chrome Finish

Product Code	Length (Inches)	Maximum Jaw Opening (Inches)	Head Thickness (Inches)
AP-4A	4	1/2	11/32
AP-6A	6	3/4	7/16
AP-8A	8	1	1/2
AP-10A	10	1 11/64	39/64
AP-12A	12	1 5/16	23/32
AP-15A	15	1 11/16	51/64
AP-18A	18	2 1/16	57/64
AP-24A	24	2 7/16	1 9/64

AP-10A

Features

Made in U.S.A.

- Chrome plated finish allows for easy cleaning after each use.
- Serrated knurl is designed for quick and smooth adjustments.
- I-Beam designed handle provides strength and durability.
- Inch (SAE) scale is laser-etched on head face for easy determination of bolt head width.

WILLIAMS

ADJUSTABLE WRENCH

Black Finish

Product Code	Length (Inches)	Maximum Jaw Opening (Inches)	Head Thickness (Inches)
AB-4A	4	1/2	11/32
AB-6A	6	3/4	7/16
AB-8A	8	1	1/2
AB-10A	10	1 11/64	39/64
AB-12A	12	1 5/16	23/32
AB-15A	15	1 11/16	51/64
AB-18A	18	2 1/16	57/64
AB-24A	24	2 7/16	1 9/64

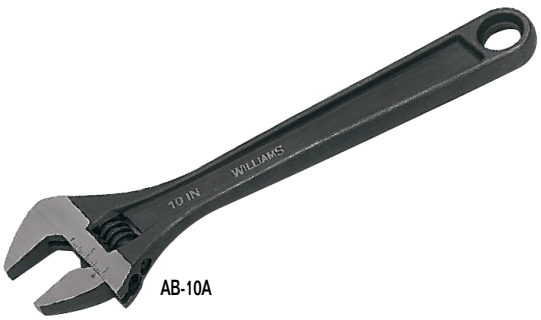

AB-10A

Features

Made in U.S.A.

- Drop forged, heat treated industrial finish with satin finish handles for firm safe grip.
- Inch (SAE) scale is laser-etched on head face for easy determination of bolt head width.

WILLIAMS

ADJUSTABLE WRENCH

Comfort Grip

Product Code	Length (Inches)	Maximum Jaw Opening (Inches)	Head Thickness (Inches)
APC-6A	4	3/4	7/8
APC-8A	6	1	1/2
APC-10A	10	1 11/64	39/64
APC-12A	12	1 5/8	23/32

APC-10A

Features

Made in U.S.A.

- Comfort thermoplastic grips cushion the handle surface and stay comfortable even in extreme temperatures.
- Chrome plated finish allows for easy cleaning.
- Serrated knurl is designed for quick and smooth adjustments.
- I-Beam designed handle provides strength and durability.
- Inch (SAE) scale is laser-etched on head face for easy determination of bolt head width.

13404

13610

13342

13642

WILLIAMS®

ADJUSTABLE WRENCHES

Heavy Duty Industrial Grade Adjustable Wrenches

Product Code	Length (Inches)	Maximum Jaw Opening (Inches)	Head Thickness (Inches)
Chrome Finish:			
13404	4	1/2	11/32
13406	6	15/16	7/16
13408	8	1 3/16	1/2
13410	10	1 3/8	5/8
13412	12	1 5/8	23/32
13415	15	1 25/32	15/16
13418	18	2 3/16	1 1/32
13424	24	2 7/16	1 1/8
Black Phosphate Finish:			
13604	4	1/2	11/32
13606	6	15/16	7/16
13608	8	1 3/16	1/2
13610	10	1 3/8	5/8
13612	12	1 5/8	23/32
13615	15	1 25/32	15/16
13618	18	2 3/16	1 1/32
13624	24	2 7/16	1 1/8

Fed. Spec.: ANSI B107.8M

13342 4 Piece Chrome Adjustable Wrench Set, in Vinyl Pouch – 50005

Contents Include:

Product Code	Size (Inches)	Product Code	Size (Inches)
13406	6	13410	10
13408	8	13412	12

13642 4 Piece Black Adjustable Wrench Set, in Vinyl Pouch – 50005

Contents Include:

Product Code	Size (Inches)	Product Code	Size (Inches)
13606	6	13610	10
13608	8	13612	12

Features

- Measurement scale on head conveniently shows fastener size.
- Chrome wrenches are fully polished for easy clean-up.
- Exceed ANSI specifications for strength.
- Precision hardened and anti-corrosion treated.

WILLIAMS®

ADJUSTABLE CONSTRUCTION WRENCH

Heavy-Duty With Polished Head and Measurement Scales

Product Code	Length (Inches)	Maximum Jaw Opening (Inches)	Head Thickness (Inches)
13625	16	1 1/2	23/32

13625

Features

- Tapered spud handle locates and aligns bolts and rivets.
- Hole in handle permits tethering wrench for safety.
- Measurement scale on head conveniently shows fastener size.
- Economical black phosphate finish resists rust.

WILLIAMS®

SINGLE HEAD OPEN END OFFSET STRUCTURAL WRENCHES

Industrial Black Finish, SAE

Product Code	Size (Inches)	A Overall Length (Inches)	B Open End Width (Inches)	C Open End Thickness (Inches)	D Handle Offset (Inches)
1904A	3/4	11 9/16	1 19/32	15/32	7/8
1905	7/8	14 5/16	2	9/16	1
1906	15/16	14 3/16	1 31/32	19/32	1
1906B	1	14 1/4	2	19/32	1
1907	1 1/16	16 13/16	2 5/32	5/8	1 1/8
1907A	1 1/8	16 13/16	2 1/4	5/8	1 1/8
1908	1 1/4	17 11/16	2 23/32	11/16	1 1/4
1908A	1 5/16	18 3/4	2 13/16	23/32	1 1/4
1909	1 7/16	19 3/4	3 5/32	25/32	1 1/4
1909A	1 1/2	19 7/8	3 5/32	25/32	1 1/2
1910	1 5/8	21 1/16	3 7/32	7/8	1 1/2
1911	1 13/16	23	3 3/4	1 3/4	1 5/8
1911A	1 7/8	22 13/16	3 25/32	31/32	1 5/8
1912	2	23 3/4	4 7/32	31/32	1 5/8

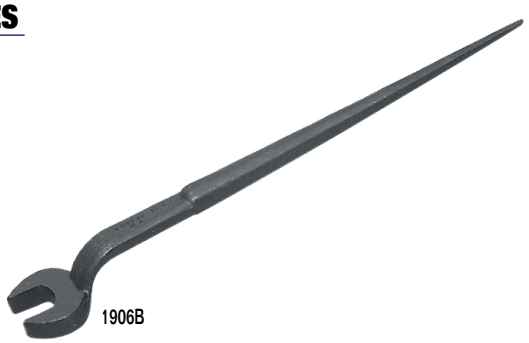
1906B

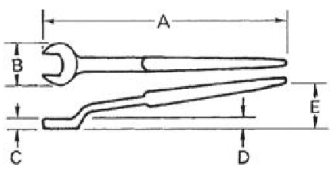

Features

- Long offset handle is designed for clearance of obstructions while providing greater leverage.
- Tapered spud handle locates and aligns bolt and rivet holes.

Made in U.S.A.

WILLIAMS®

SINGLE HEAD OPEN END CONSTRUCTION WRENCHES

Industrial Black Finish, SAE

Product Code	Size (Inches)	A Overall Length (Inches)	B Open End Width (Inches)	C Open End Thickness (Inches)
204A	3/4	12	1 23/32	15/32
205	7/8	14 1/4	2 1/16	19/32
206	15/16	14 3/4	2 1/8	19/32
206B	1	13 1/8	2 3/32	1/2
207	1 1/16	16 9/16	2 7/16	21/32
207A	1 1/8	17	2 9/16	11/16
Q-208	1 1/4	18 15/16	2 23/32	23/32
208A	1 5/16	19	2 27/32	3/4
209	1 7/16	21 1/8	3 3/8	27/32
209A	1 1/2	18 3/4	2 3/4	13/16
Q-210	1 5/8	22 11/16	3 21/32	7/8
211	1 13/16	25	4 1/2	1 1/32
211A	1 7/8	25 1/8	4 9/16	1 1/16

206B

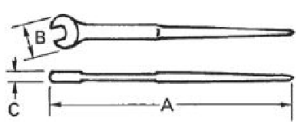

Features

- 15° open end provides two gripping angles when wrench is turned over.
- Tapered spud handle locates and aligns bolt and rivet holes.

Made in U.S.A.

8907A

WILLIAMS®

OFFSET STRUCTURAL BOX WRENCHES

Industrial Black Finish, SAE

Product Code	Size (Inches)	A Overall Length (Inches)	B Head Diameter (Inches)	C Offset at End
8905A	13/16	12	1 15/32	1 25/32
8905	7/8	12	1 15/32	1 25/32
8906	15/16	12	1 5/8	1 61/64
8906B	1	12	1 5/8	1 61/64
8907	1 1/16	15	1 53/64	2 9/64
8907A	1 1/8	15	1 53/64	2 9/64
8908	1 1/4	17	2 5/64	2 21/64
8908A	1 5/16	17	2 5/64	2 21/64
8909	1 7/16	21	2 3/8	2 3/4
8909A	1 1/2	21	2 3/8	2 3/4
8910	1 5/8	22	2 5/8	2 7/8
8910A	1 11/16	22	2 5/8	2 7/8
8911	1 13/16	23	2 29/32	3
8911A	1 7/8	23	2 29/32	3
8912	2	24 1/2	3 5/32	3 5/32
8913	2 3/16	26	3 15/32	3 1/2
8914	2 3/8	28	3 23/32	3 11/16
8915	2 9/16	30	3 29/32	3 13/16
8916	2 3/4	30	4 5/32	3 29/32

Fed. Spec: GGG-W-636E Type 9 Class 2

Made in U.S.A.

Features

- Offset from handle to permit clearance of obstructions
- Handles are tapered for insertion into bolt holes
- Industrial Black Finish

WILLIAMS®

TUBULAR WRENCH HANDLES

Industrial Black Finish

Product Code	Length (Inches)	Inside Handle Diameter (Inches)
13TH	13½	7/8
24TH	24	7/8
36TH	36	1 1/8

Made in U.S.A.

13TH

Features

- For use with all Williams Tubular Handle Wrenches.
- A detent on the wrench shaft helps to align locking button with handle hole.
- Tubular wrenches may be used without the handle to quickly run down nuts.

WILLIAMS®

OPEN END TUBULAR HANDLE WRENCHES

Industrial Black Finish, 12 Point, SAE / Metric

Product Code	Size (Inches)	Size (MM)	B Outside Head Diameter (Inches)	C Head Depth (Inches)	Assembled Length From Bolt Center (Inches)	Fits Handle No.
1228TOE	7/8	-	1 15/16	1/2	29 7/8	13TH - 24TH
1230TOE	15/16	-	1 15/16	1/2	29 7/8	13TH - 24TH
1232TOE	1	-	2 5/16	9/16	30 21/32	13TH - 24TH
1234TOE	1 1/16	-	2 5/16	9/16	30 21/32	13TH - 24TH
1236TOE	1 1/8	-	2 5/16	9/16	30 21/32	13TH - 24TH
1240TOE	1 1/4	32	2 11/16	5/8	31 21/32	13TH - 24TH
1242TOE	1 5/16	33	2 11/16	5/8	31 21/32	13TH - 24TH
1244TOE	1 3/8	35	2 11/16	5/8	32 1/2	13TH - 24TH
1246TOE	1 7/16	36	3 1/8	11/16	32 9/16	13TH - 24TH
1248TOE	1 1/2	38	3 1/8	11/16	33 9/16	13TH - 24TH

Made in U.S.A.

1228TOE

Features

- Unique, versatile design allows wrench to be used with or without optional handles.
- Tubular wrenches may be used without the handle to quickly run down nuts.
- The handle can then be attached to provide maximum turning power for final tightening or to reach otherwise inaccessible fasteners.
- A detent on the wrench shaft helps to align locking button with handle hole.
- Open end wrench head provides access in tight areas.
- Sizes of both SAE and corresponding metric fasteners are shown.

CDI WSC-400CA and WSC-600CA Split Beam Torque Wrenches accept the Williams Heavy Duty Tubular Wrenches that fit the 24TH handle. The length of the wrench head matches the effective length of the ratchet head and extender that come with the torque wrench, creating the same effective length. Removing the ratchet head and extender from the torque wrench and inserting the desired Heavy Duty Tubular wrench of choice (fitting 24TH handle) creates an expanded use interchangeable head system. The complete assortment of CDI Split Beam Torque Wrenches is found on page 78.

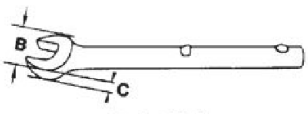

B = Outside Dia.
C = Head Depth

1234TOB

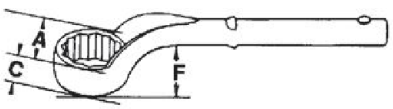

A = Outside Dia.
C = Head Depth
F = Height of Offset

WILLIAMS®

OFFSET BOX END TUBULAR HANDLE WRENCHES

Industrial Black Finish, 12 Point, SAE / Metric

Product Code	Size (Inches)	Size (MM)	A Outside Head Diameter (Inches)	C Head Depth (Inches)	F Height of Offset (Inches)	Assembled Length From Bolt Center (Inches)	Fits Handle No.
1234TOB	1 1/16	-	1 21/32	5/8	15/16	30 3/32	13TH - 24TH
1236TOB	1 1/8	-	1 7/8	23/32	1 1/16	30 7/32	13TH - 24TH
1240TOB	1 1/4	32	1 29/32	23/32	1 1/16	30 7/32	13TH - 24TH
1242TOB	1 5/16	33	2	27/32	1 1/8	32 1/2	13TH - 24TH
1244TOB	1 3/8	35	2 1/16	7/8	1 3/16	32 19/32	13TH - 24TH
1246TOB	1 7/16	36	2 5/32	7/8	1 1/4	32 19/32	13TH - 24TH
1248TOB	1 1/2	38	2 1/4	15/16	1 5/16	32 19/32	13TH - 24TH
1250TOB	1 9/16	40	2 5/16	15/16	1 5/16	32 19/32	13TH - 24TH
1252TOB	1 5/8	41	2 3/8	31/32	1 3/8	32 23/32	13TH - 24TH
1254TOB	1 11/16	43	2 19/32	1 1/16	1 7/16	43 9/32	36TH
1256TOB	1 3/4	44	2 5/8	1 1/16	1 1/2	43 9/32	36TH
1258TOB	1 13/16	46	2 23/32	1 1/8	1 9/16	43 13/32	36TH
1260TOB	1 7/8	47	2 3/4	1 1/8	1 5/8	43 13/32	36TH
1264TOB	2	51	2 31/32	1 1/4	1 3/4	43 1/2	36TH
1266TOB	2 1/16	52	2 31/32	1 1/4	1 3/4	43 1/2	36TH
1270TOB	2 3/16	55	3 3/16	1 5/16	1 7/8	43 19/32	36TH
1272TOB	2 1/4	57	3 1/4	1 5/16	1 7/8	43 19/32	36TH
1276TOB	2 3/8	60	3 13/32	1 13/32	2	43 11/16	36TH
1282TOB	2 9/16	65	3 21/32	1 1/2	2 1/4	43 13/16	36TH
1284TOB	2 5/8	67	3 11/16	1 1/2	2 1/4	44 7/32	36TH
1288TOB	2 3/4	70	3 15/16	1 19/32	2 1/2	44	36TH
1294TOB	2 15/16	75	4 5/32	1 11/16	2 5/8	44 3/32	36TH
12100TOB	3 1/8	79	4 3/8	1 11/16	2 3/4	44 19/32	36TH

Made in U.S.A.

Features

- Unique, versatile design allows wrench to be used with or without optional handles.
- Tubular Wrenches may be used without the handle to quickly run down nuts.
- The handle can then be attached to provide maximum turning power for final tightening or to reach otherwise inaccessible fasteners.
- A detent on the wrench shaft helps to align locking button with handle hole.
- Offset box wrench head provides turning clearance.
- Sizes of both SAE and corresponding metric fasteners are shown.

1224TSB

WILLIAMS®

STRAIGHT BOX END TUBULAR HANDLE WRENCHES

Industrial Black Finish, 12 Point, SAE / Metric

Product Code	Size (Inches)	Size (MM)	A Outside Head Diameter (Inches)	C Head Depth (Inches)	Assembled Length From Bolt Center (Inches)	Fits Handle No.
1224TSB	3/4	-	1 1/4	17/32	29 17/32	13TH - 24TH
1226TSB	13/16	-	1 1/4	17/32	29 17/32	13TH - 24TH
1228TSB	7/8	-	1 13/32	19/32	29 17/32	13TH - 24TH
1230TSB	15/16	-	1 13/32	19/32	29 17/32	13TH - 24TH
1232TSB	1	-	1 9/16	21/32	29 19/32	13TH - 24TH
1234TSB	1 1/16	-	1 9/16	21/32	29 19/32	13TH - 24TH
1236TSB	1 1/8	-	1 5/16	11/16	29 19/32	13TH - 24TH
1240TSB	1 1/4	32	1 29/32	27/32	31 29/32	13TH - 24TH
1242TSB	1 5/16	33	1 29/32	27/32	31 29/32	13TH - 24TH
1246TSB	1 7/16	36	2 5/32	7/8	31 29/32	13TH - 24TH
1248TSB	1 1/2	38	2 5/32	7/8	31 29/32	13TH - 24TH
1252TSB	1 5/8	41	2 5/16	15/16	32 23/32	13TH - 24TH
12100TSB	3 1/8	79	4 9/32	1 3/4	42 5/32	36TH

Made in U.S.A.

Features

- Unique, versatile design allows wrench to be used with or without optional handles.
- Tubular wrenches may be used without the handle to quickly run down nuts.
- The handle can then be attached to provide maximum turning power for final tightening or to reach otherwise inaccessible fasteners.
- A detent on the wrench shaft helps to align locking button with handle hole.
- Straight box wrench head provides access when clearance is limited.
- Sizes of both SAE and corresponding metric fasteners are shown.

WILLIAMS

12 F M

STRAIGHT PATTERN BOX END STRIKING WRENCHES

Industrial Black Finish, 12 Point, SAE / Metric

Product Code	Size (Inches)	Size (MM)	A Overall Length (Inches)	B Box End Diameter (Inches)	C Box End Thickness (Inches)
SFH-1808BW	1 3/16	30	7 9/16	2 3/32	7/8
SFH-1808W	1 1/4	32	7 9/16	2 3/32	7/8
SFH-1808AW	1 5/16	33	7 9/16	2 3/32	7/8
SFH-1808CW	1 3/8	35	7 21/32	2 9/32	31/32
SFH-1809W	1 7/16	-	7 21/32	2 9/32	31/32
SFH-1809BW	-	36	7 21/32	2 9/32	31/32
SFH-1809AW	1 1/2	38	7 21/32	2 9/32	31/32
SFH-1810W	1 5/8	41	7 27/32	2 21/32	1 5/32
SFH-1810AW	1 11/16	43	7 13/16	2 21/32	1 5/32
SFH-1810BW	1 3/4	44	7 15/16	2 13/16	1 1/4
SFH-1811W	1 13/16	46	7 15/16	2 13/16	1 1/4
SFH-1811AW	1 7/8	-	7 15/16	2 13/16	1 1/4
SFH-1812BW	-	50	11 19/32	3 3/16	1 13/32
SFH-1812W	2	51	11 19/32	3 3/16	1 13/32
SFH-1812AW	2 1/16	52	11 19/32	3 3/16	1 13/32
SFH-1813W	2 3/16	55	11 3/4	2 9/16	1 17/32
SFH-1813AW	2 1/4	57	11 3/4	2 9/16	1 17/32
SFH-1814W	2 3/8	60	11 7/8	3 3/4	1 11/16
SFH-1814AW	2 7/16	62	11 7/8	3 3/4	1 11/16
SFH-1814BW	2 1/2	64	11 7/8	3 3/4	1 11/16
SFH-1815W	2 9/16	65	13	4	1 13/16
SFH-1815AW	2 5/8	67	13	4	1 13/16
SFH-1816W	2 3/4	70	14 9/32	4 9/32	1 15/16
SFH-1816AW	2 13/16	71	14 9/32	4 9/32	1 15/16
SFH-1816BW	2 15/16	75	14 13/32	4 17/32	2 1/16
SFH-1817AW	3	76	14 13/32	4 17/32	2 1/16
SFH-1817W	3 1/8	80	17 19/32	4 29/32	2 9/32
SFH-1818AW	3 3/8	85	17 19/32	4 29/32	2 9/32
SFH-1818W	3 1/2	89	17 13/16	5 5/16	2 15/32
SFH-1819BWA	3 3/4	95	17 29/32	5 17/32	2 21/32
SFH-1819WA	3 7/8	98	17 29/32	5 17/32	2 21/32
SFH-1819CWA	4 1/8	105	18 5/32	6 1/32	2 15/16
SFH-1819AWA	4 1/4	108	18 5/32	6 1/32	2 15/16
SFH-1820BWA	4 1/2	114	20 1/32	6 25/32	3 3/16
SFH-1820WA	4 5/8	117	20 1/32	6 25/32	3 3/16

SFH-1812W

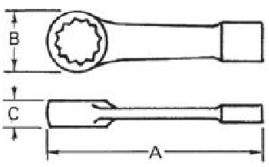

Features

Made in U.S.A.

- Striking face wrenches are designed to be struck by a hammer on the anvil area in order to loosen frozen fasteners or to set and tighten fasteners.
- Anvils are proportional to opening sizes. Special heat treating provides maximum durability for long life.
- Straight handle design resists springing while allowing the fastener to turn more easily.
- Williams' expanded line of offset striking face wrenches, up to 4-5/8", provides the most extensive line on the market.
- Specifically engineered to hold up under the most rigorous industrial use.

WILLIAMS®

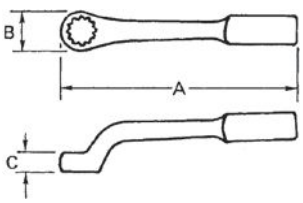

OFFSET PATTERN BOX END STRIKING WRENCHES

Industrial Black Finish, 12 Point, SAE / Metric

Product Code	Size (Inches)	Size (MM)	A Overall Length (Inches)	B Box End Diameter (Inches)	C Box End Thickness (Inches)
8807W	1 1/16	27	9 31/32	1 21/32	23/32
8807AW	1 1/8	-	10 31/32	1 15/16	3/4
8808BW	1 3/16	30	10 31/32	1 15/16	3/4
8808W	1 1/4	32	10 31/32	1 15/16	3/4
8808AW	1 5/16	33	10 31/32	1 15/16	3/4
8808CW	1 3/8	35	11 1/2	2 5/32	29/32
8809W	1 7/16	-	11 1/2	2 5/32	29/32
8809BW	-	36	11 1/2	2 5/32	29/32
8809AW	1 1/2	38	12	2 7/16	1
8810W	1 5/8	41	12	2 7/16	1
8810AW	1 11/16	43	12 9/16	2 11/16	1 1/8
8811BW	1 3/4	44	12 9/16	2 11/16	1 1/8
8811W	1 13/16	46	12 9/16	2 11/16	1 1/8
8811AW	1 7/8	-	13	2 7/8	1 1/4
8812AW	1 15/16	49	13	2 7/8	1 1/4
8812BW	-	50	13	2 7/8	1 1/4
8812W	2	51	13	2 7/8	1 1/4
8813BW	2 1/8	54	13 9/16	3 1/4	1 13/32
8813W	2 3/16	55	13 9/16	3 1/4	1 13/32
8813AW	2 1/4	57	13 9/16	3 1/4	1 13/32
8814AW	2 5/16	59	13 9/16	3 1/4	1 13/32
8814W	2 3/8	60	14 1/8	3 11/16	1 1/2
8815BW	2 1/2	64	14 1/8	3 11/16	1 1/2
8815W	2 9/16	65	14 1/8	3 11/16	1 1/2
8815AW	2 5/8	67	15	3 15/16	1 5/8
8816W	2 3/4	70	15	2 15/16	1 5/8
8816CW	2 7/8	73	16	4 7/16	1 3/4
8816BW	2 15/16	75	16	4 7/16	1 3/4
8817AW	3	76	16	4 7/16	1 3/4
8817W	3 1/8	80	16	4 7/16	1 3/4
8818AW	3 3/8	85	18 9/32	6	2
8818W	3 1/2	89	18 9/32	6	2
8819BW	3 3/4	95	18 9/32	6	2
8819W	3 7/8	98	18 9/32	6	2
8819CW	4 1/8	105	18 9/32	6	2
8819AW	4 1/4	108	18 9/32	6	2

Made in U.S.A.

Features

- Striking face wrenches are designed to be struck by a hammer on the anvil area in order to loosen frozen fasteners or to set and tighten fasteners.
- Anvils are proportional to opening sizes. Special heat treating provides maximum durability for long life.
- Offset handle is close to head to provide clearance in confined areas.
- Williams' expanded line of offset striking face wrenches, up to 4-1/4", provides the most extensive line on the market.
- Specifically engineered to hold up under the most rigorous industrial use.

WILLIAMS®

ADJUSTABLE PIN SPANNER WRENCHES

Industrial Black Finish, SAE

Product Code	Span Diameter (Inches)	Pin Diameter (Inches)	Pin Length (Inches)	Overall Length (Inches)
O-471	3/4 to 2	1/8	1/8	5 3/8
O-471A	3/4 to 2	3/16	5/32	5 3/8
O-472	1 1/4 to 3	3/16	3/16	6 7/8
O-472A	1 1/4 to 3	1/4	7/32	6 7/8
O-474	2 to 4 3/4	1/4	1/4	9 1/2
O-474A	4 1/2 to 6 1/4	3/8	1/4	9 7/8

WS-476 6-Piece Adjustable Pin Spanner Wrench Set, in Roll Pouch – R-31

Contents Include:

Product Code	Overall Length (Inches)	Product Code	Overall Length (Inches)
O-471	5 3/8	O-472A	6 7/8
O-471A	5 3/8	O-474	9 1/2
O-472	6 7/8	O-474A	9 7/8

WS-476

Features

- Ideal for adjusting collars, lock nut rings, and bearings.
- Specifically engineered to hold up under the most rigorous industrial use.

Made in U.S.A.

WILLIAMS®

ADJUSTABLE HOOK SPANNER WRENCHES

Industrial Black Finish, SAE

Product Code	Span Diameter (Inches)	Hook Depth (Inches)	Hook Thickness (Inches)	Overall Length (Inches)
471	3/4 to 2	1/8	11/32	5 3/8
472	1 1/4 to 3	5/32	13/32	7 1/4
474	2 to 4 3/4	3/16	15/32	11 1/2
474A	4 1/2 to 6 1/4	1/4	15/32	17 1/2
474B	6 1/8 to 8 3/4	5/16	15/32	18 1/2

WS-474 4-Piece Adjustable Hook Spanner Wrench Set, in Roll Pouch – R-5

Product Code	Overall Length (Inches)	Product Code	Overall Length (Inches)
471	5 3/8	474	11 1/2
472	7 1/4	474A	17 1/2

WS-474

Features

- Ideal for adjusting collars, lock nut rings, and bearings.
- Specifically engineered to hold up under the most rigorous industrial use.

Made in U.S.A.

WILLIAMS®

ADJUSTABLE FACE SPANNER WRENCHES

Industrial Black Finish, SAE

Product Code	Span Diameter (Inches)	Pin Diameter (Inches)	Pin Length (Inches)	Overall Length (Inches)
482	2	3/16	1/4	6 1/4
483	3	1/4	1/4	8 1/8
484	4	5/16	1/2	10 3/8

WS-483 3-Piece Adjustable Face Spanner Wrench Set, in Roll Pouch – R-48

Contents Include:

Product Code	Overall Length (Inches)	Product Code	Overall Length (Inches)
482	6 1/4	484	10 3/8
483	8 1/8		

WS-483

Features

- Ideal for adjusting collars, lock nut rings, and bearings.
- Specifically engineered to hold up under the most rigorous industrial use.

Made in U.S.A.

900T-200

900T-8MM

900T-10US

BAHCO

T-HANDLE SCREWDRIVERS - HEX

SAE & Metric

Product Code	Size (Inches)	Product Code	Size (MM)
900T-094	.050	900T-020-100	2
900T-109	1/16	900T-025-100	2.5
900T-125	5/64	900T-030-100	3
900T-141	3/32	900T-040-150	4
900T-156	7/64	900T-050-150	5
900T-188	1/8	900T-060-200	6
900T-219	9/64	900T-080-200	8
900T-250	5/32	900T-100-200	10
900T-313	3/16		
900T-375	7/32		

900T-8MM 8 Piece Hex T-Handle Screwdriver Set, MM in Cardboard Box

Contents Include:

Product Code	Size (Inches)	Product Code	Size (Inches)
900T-020-100	2	900T-050-150	5
900T-025-100	2.5	900T-060-200	6
900T-030-100	3	900T-080-200	8
900T-040-150	4	900T-100-200	10

900T-10US 10 Piece Hex T-Handle Screwdriver Set, SAE in Cardboard Box

Contents Include:

Product Code	Size (Inches)	Product Code	Size (Inches)
900T-094	.050	900T-188	1/8
900T-109	1/16	900T-219	9/64
900T-125	5/64	900T-250	5/32
900T-141	3/32	900T-313	3/16
900T-156	7/64	900T-375	7/32

Features

- Comfort grip handle for durability and flexibility in all types of work applications
- Black oxide tips prevent chipping of chrome to reduce possible contamination at work location

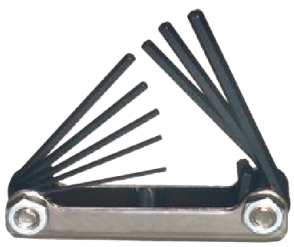
WS-45

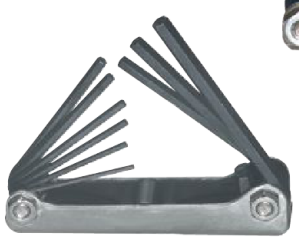
WS-46

MWS-47

WILLIAMS (F) (M)

FOLDING HEX KEY SETS

SAE and Metric

Product Code	WS-45		WS-46		MWS-47	
Number of Pieces	8		9		7	
	Hex Size (Inches)	Key Length (Inches)	Hex Size (Inches)	Key Length (Inches)	Includes Hex Size (MM)	Key Length (Inches)
	.050	1 1/4	5/64	1 1/2	1.5	1 3/8
	1/16	1 3/8	3/32	1 9/16	2	1 1/2
	5/64	1 7/16	7/64	1 11/16	2.5	1 5/8
	3/32	1 9/16	1/8	1 15/16	3	1 3/4
	7/64	1 5/8	9/64	2	4	2
	1/8	1 11/16	5/32	2 1/4	5	2 1/4
	9/64	1 13/16	3/16	2 1/2	6	2 1/2
	5/32	2	7/32	2 5/8		
			1/4	2 7/8		

Features

- Steel case is chrome plated to resist corrosion.
- Keys are black oxide finish.
- Convenient item for pocket or tool box.

USA Made in U.S.A.

WILLIAMS

BALL END AND STANDARD HEX KEY SETS

SAE and Metric, in Handy Compact Plastic Holder

Product Code	Number of Pieces	Type	Key Style	Key Length	Size Range
10107	7	SAE	Standard	Short	5/64 - 1/4"
10111	11	SAE	Standard	Short	.050 - 1/4"
10113	13	SAE	Standard	Short	.050 - 3/8"
10213	13	SAE	Standard	Long	.050 - 3/8"
10507	7	Metric	Standard	Short	1.5 - 6.0 mm
10509	9	Metric	Standard	Short	1.5 - 10.0 mm
13213	13	SAE	Ball Hex	Long	.050 - 3/8"
13609	9	Metric	Ball Hex	Long	1.5 - 10.0 mm

Features

- Plastic holders organize hex keys securely in place.
- Keys are black oxide finish.
- Holders are color coded, red for fractional and blue for metric.
- Ball hex key ends are designed with ball on long arm to provide 360° of rotation at up to a 30° angle.

Made in U.S.A.

10213

10507

WILLIAMS

HEX KEY SETS IN ROLL POUCH

SAE and Metric

Product Code	WS-44		MWS-27	
Number of Pieces	13		11	
	Hex Size (Inches)	Key Length (Inches)	Hex Size (MM)	Key Length (Inches)
	.050	1 11/16	2	2
	1/16	1 13/16	2 1/2	2 5/16
	5/64	1 31/32	3	2 7/32
	3/32	2 1/8	4	2 13/16
	7/64	2 1/4	5	3 5/16
	1/8	2 3/8	6	3 23/32
	9/64	2 9/16	8	4 1/16
	5/32	2 19/32	10	4 5/8
	3/16	3	12	5 7/32
	7/32	3 3/16	14	5 15/16
	1/4	3 1/2	17	6 7/8
	5/16	4		
	3/8	4 17/32		
Roll Pouch: 097411			Roll Pouch: 099965	

Features

- Roll pouch keeps hex keys organized.
- Keys are black oxide finish.

Made in U.S.A.

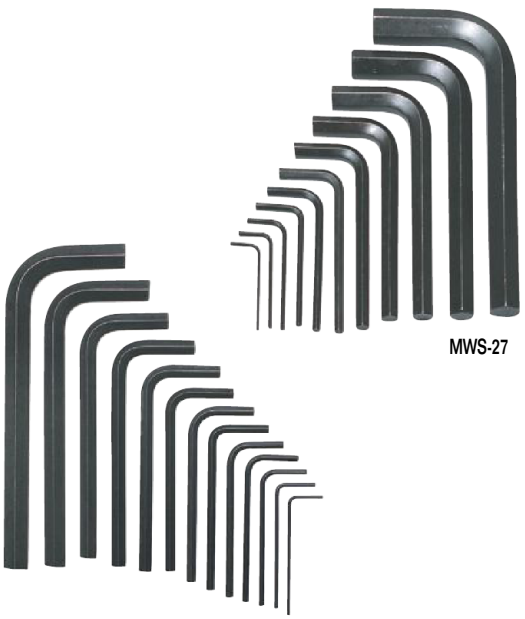
MWS-27

WS-44

WILLIAMS

L-TYPE HEX KEYS

Industrial Black Finish, SAE

Product Code	Size (Inches)	Length (Inches)	Width (Inches)	Pkg. Qty.
HK-050	.050	1 23/32	1/2	25
HK-1/16	1/16	1 7/8	1/2	25
HK-5/64	5/64	1 31/32	5/8	25
HK-3/32	3/32	1 13/16	9/16	25
HK-7/64	7/64	2 1/4	23/32	25
HK-1/8	1/8	2 13/32	3/4	25
HK-9/64	9/64	2 3/8	25/32	25
HK-5/32	5/32	2 21/32	27/32	25
HK-3/16	3/16	2 31/32	1	25
HK-7/32	7/32	3 5/16	1	25
HK-1/4	1/4	3 5/8	1 1/8	25
HK-3/8	3/8	4 23/32	1 13/32	5

Features

- Keys are black oxide finish.

Made in U.S.A.

WILLIAMS

L-TYPE HEX KEYS

Industrial Black Finish, Metric

Product Code	Size (MM)	Length (Inches)	Width (Inches)	Pkg. Qty.
HK-2mm	2	2	5/8	25
HK-2.5mm	2 1/2	2 1/4	23/32	25
HK-3mm	3	2 9/16	13/16	25
HK-4mm	4	2 13/16	31/32	25
HK-5mm	5	3 13/32	1 1/8	25
HK-6mm	6	3 3/4	1 1/8	10
HK-8mm	8	4 5/16	1 1/8	5
HK-10mm	10	4 3/4	1 1/2	5
HK-12mm	12	5 1/4	1 5/8	5
HK-14mm	14	6	1 1/2	5
HK-17mm	17	6 3/4	2 1/2	1

Features

- Keys are black oxide finish.

Made in U.S.A.

HK-050

HK-2mm

Sockets & Drive Tools

Sockets & Drive Tools

Chrome Sockets

- SUPERTORQUE® lobular opening allows socket to contact the fastener's flats without rounding or deforming nuts or bolts.
- Chamfered ends provide easy engagement of the drive tool and fastener.
- Sockets are extruded or hot broached from alloy steel, precision machined and fully heat treated.

Ratchets

- Snap-on Industrial Brands offers a tremendous variety of ratchets to suit every tool need.
- Williams and Bahco ratchets are available in drive sizes from ¼" through 1" drive.
- Handle styles include ergonomically designed, knurled, smooth and finger fit.
- Williams Enclosed Head Ratchets feature a gasket in the head to prevent the entry of foreign matter into the gear mechanism.
- Bahco ergo® ratchets feature a ring switch for one handed direction changes, a built in spinner disk for fast socket turn down, a true ergonomic handle for maximum comfort, and an extra fine tooth mechanism to minimize handle swing.

Impact Universals

- Unique design places a sleeve over the ball area to provide maximum safety.
- Lock button feature provides secure socket retention.

Impact Sockets

- SUPERTORQUE® lobular opening allows socket to contact the fasteners without rounding or deforming nuts or bolts.
- Chamfered ends provide easy engagement of the drive tool and fastener.

Turbosocket® Salvage Sockets

- TURBOSOCKET® salvage sockets are specifically designed to remove damaged or rounded nuts or bolts.
- Special opening design allows for easy installation over damaged nut or bolt.
- Heat treated alloy provides operational strength so that impact wrenches can be used.

WSM-38HFTB

WILLIAMS

38 PIECE 1/4" DRIVE SOCKET AND DRIVE TOOL SET

6 & 8 Point SAE, Packed in Exclusive Keep-Safe-Foam System with Metal Box

Product Code	Description
WSM-38HFTB	38 Piece Tool Set with TB-103 Metal Tool Box
WSM-38HF	38 Piece Tool Set Only - Packed in Keep Safe Foam System

Contents Include:

Drive Tools:

Product Code	Description
M-52EHA	5 1/2" Enclosed Head Ratchet
M-42A	Flex Handle
M-102	2" Extension
M-104	4" Extension
M-115	6" Extension

Shallow 6-Point Sockets

Product Code	Size (Inches)
M-605	5/32
M-606	3/16
M-607	7/32
M-608	1/4
M-609	9/32
M-610	5/16
M-611	11/32
M-612	3/8
M-614	7/16
M-616	1/2
M-618	9/16

Shallow 8-Point Sockets

Product Code	Size (Inches)
M-808	1/4
M-810	5/16
M-812	3/8

Drive Tools:

Product Code	Description
M-106A	Spinner Handle
M-140A	Universal Joint
M-20A	Sliding T-Handle
MFE-6	6" Flexible Extension

Deep 6-Point Sockets

Product Code	Size (Inches)
MD-606	3/16
MD-607	7/32
MD-608	1/4
MD-609	9/32
MD-610	5/16
MD-611	11/32
MD-612	3/8
MD-614	7/16
MD-616	1/2
MD-618	9/16

Screwdriver Bit Sockets

Product Code	Description
MA-7A-1P	#1 Phillips® Tip
MA-7A-2P	#2 Phillips® Tip
MA-5A-1S	3/16" Slotted Tip
MA-7A-2S	7/32" Slotted Tip
MA-8A-3S	9/32" Slotted Tip

Features

- Keep-Safe-Foam system keeps tools organized and helps prevent loss.
- All tools are professional quality, made of high-grade chrome vanadium steel.
- Sockets feature SUPERTORQUE® lobular openings for greater turning power without deforming the fastener.
- Metal tool box made for years of rugged use.

Made in U.S.A.

WSM-26HFTB

WILLIAMS

26 PIECE 1/4" DRIVE SOCKET AND DRIVE TOOL SET

6 Point SAE, Packed in Exclusive Keep-Safe-Foam System with Metal Box

Product Code	Description
WSM-26HFTB	26 Piece Tool Set with TB-102 Metal Tool Box
WSM-26HF	26 Piece Tool Set Only - Packed in Keep Safe Foam System

Contents Include:

Drive Tools:

Product Code	Description
M-52EHA	5 1/2" Enclosed Head Ratchet
M-102	2" Extension
M-115	6" Extension

Shallow 6-Point Sockets

Product Code	Size (Inches)
M-605	5/32
M-606	3/16
M-607	7/32
M-608	1/4
M-609	9/32
M-610	5/16
M-611	11/32
M-612	3/8
M-614	7/16
M-616	1/2
M-618	9/16

Drive Tools:

Product Code	Description
M-106A	Spinner Handle
M-140A	Universal Joint

Deep 6-Point Sockets

Product Code	Size (Inches)
MD-606	3/16
MD-607	7/32
MD-608	1/4
MD-609	9/32
MD-610	5/16
MD-611	11/32
MD-612	3/8
MD-614	7/16
MD-616	1/2
MD-618	9/16

Features

- Keep-Safe-Foam system keeps tools organized and helps prevent loss.
- All tools are professional quality, made of high-grade chrome vanadium steel.
- Sockets feature SUPERTORQUE® lobular openings for greater turning power without deforming the fastener.
- Metal tool box made for years of rugged use.

Made in U.S.A.

WILLIAMS

22 PIECE 1/4" DRIVE SOCKET AND DRIVE TOOL SET

6 & 12 Point SAE, Packed in Exclusive Keep-Safe-Foam System with Metal Box

Product Code	Description
WSM-22FTB	22 Piece Tool Set with TB-102 Metal Tool Box
WSM-22F	22 Piece Tool Set Only - Packed in Keep Safe Foam System

Contents Include:

Drive Tools:

Product Code	Description
M-52EHA	5 1/2" Enclosed Head Ratchet
M-102	2" Extension
M-106A	Spinner Handle
M-140A	Universal Joint

Shallow 6-Point Sockets

Product Code	Size (Inches)
M-605	5/32
M-606	3/16
M-608	1/4

Shallow 12-Point Sockets

Product Code	Size (Inches)
M-1210	5/16
M-1211	11/32
M-1212	3/8
M-1214	7/16
M-1216	1/2
M-1218	9/16

Deep 6-Point Sockets

Product Code	Size (Inches)
MD-605	5/32
MD-606	3/16
MD-608	1/4

Deep 12-Point Sockets

Product Code	Size (Inches)
MD-1210	5/16
MD-1211	11/32
MD-1212	3/8
MD-1214	7/16
MD-1216	1/2
MD-1218	9/16

Features

- Keep-Safe-Foam system keeps tools organized and helps prevent loss.
- All tools are professional quality, made of high-grade chrome vanadium steel.
- Sockets feature SUPERTORQUE® lobular openings for greater turning power without deforming the fastener.
- Metal tool box made for years of rugged use.

Made in U.S.A.

WSM-22FTB

WILLIAMS

19 PIECE 1/4" DRIVE SOCKET AND DRIVE TOOL SET

6 & 8 Point SAE, Packed in Exclusive Keep-Safe-Foam System with Metal Box

Product Code	Description
WSM-19HFTB	19 Piece Tool Set with TB-101 Metal Tool Box
WSM-19HF	19 Piece Tool Set Only - Packed in Keep Safe Foam System

Contents Include:

Drive Tools:

Product Code	Description
M-52EHA	5 1/2" Enclosed Head Ratchet
M-102	2" Extension
M-115	6" Extension
M-106A	Spinner Handle
M-140A	Universal Joint
M-42A	Flex Handle

Shallow 8-Point Sockets

Product Code	Size (Inches)
M-808	1/4
M-810	5/16
M-812	3/8

Shallow 6-Point Sockets

Product Code	Size (Inches)
M-606	3/16
M-607	7/32
M-608	1/4
M-609	9/32
M-610	5/16
M-611	11/32
M-612	3/8
M-614	7/16
M-616	1/2
M-618	9/16

Features

- Keep-Safe-Foam system keeps tools organized and helps prevent loss.
- All tools are professional quality, made of high-grade chrome vanadium steel.
- Sockets feature SUPERTORQUE® lobular openings for greater turning power without deforming the fastener.
- Metal tool box made for years of rugged use.

Made in U.S.A.

WSM-19HFTB

WSM-15HFTB

WILLIAMS

15 PIECE 1/4" DRIVE SOCKET AND DRIVE TOOL SET

6 Point SAE, Packed in Exclusive Keep-Safe-Foam System with Metal Box

Product Code	Description
WSM-15HFTB	15 Piece Tool Set with TB-101 Metal Tool Box
WSM-15HF	15 Piece Tool Set Only - Packed in Keep Safe Foam System

Contents Include:

Drive Tools:

Product Code	Description	Product Code	Description
M-52EHA	5 1/2" Enclosed Head Ratchet	M-106A	Spinner Handle
M-102	2" Extension	M-140A	Universal Joint
M-115	6" Extension		

Shallow 6-Point Sockets

Product Code	Size (Inches)	Product Code	Size (Inches)
M-606	3/16	M-611	11/32
M-607	7/32	M-612	3/8
M-608	1/4	M-614	7/16
M-609	9/32	M-616	1/2
M-610	5/16	M-618	9/16

Features

Made in U.S.A.

- Keep-Safe-Foam system keeps tools organized and helps prevent loss.
- All tools are professional quality, made of high-grade chrome vanadium steel.
- Sockets feature SUPERTORQUE® lobular openings for greater turning power without deforming the fastener.
- Metal tool box made for years of rugged use.

WSM-13FTB

WILLIAMS

13 PIECE 1/4" DRIVE SOCKET AND DRIVE TOOL SET

6 & 12 Point SAE, Packed in Exclusive Keep-Safe-Foam System with Metal Box

Product Code	Description
WSM-13FTB	13 Piece Tool Set with TB-101 Metal Tool Box
WSM-13F	13 Piece Tool Set Only - Packed in Keep Safe Foam System

Contents Include:

Drive Tools:

Product Code	Description
M-52EHA	5 1/2" Enclosed Head Ratchet
M-102	2" Extension
M-106A	Spinner Handle
M-140A	Universal Joint

Shallow 6-Point Sockets

Product Code	Size (Inches)
M-605	5/32
M-606	3/16

Shallow 12-Point Sockets

Product Code	Size (Inches)
M-1208	1/4
M-1210	5/16
M-1211	11/32
M-1212	3/8
M-1214	7/16
M-1216	1/2
M-1218	9/16

Features

Made in U.S.A.

- Keep-Safe-Foam system keeps tools organized and helps prevent loss.
- All tools are professional quality, made of high-grade chrome vanadium steel.
- Sockets feature SUPERTORQUE® lobular openings for greater turning power without deforming the fastener.
- Metal tool box made for years of rugged use.

WILLIAMS

30 PIECE 1/4" DRIVE SOCKET AND DRIVE TOOL SET

6 Point Metric, Packed in Exclusive Keep-Safe-Foam System with Metal Box

Product Code	Description
MSM-30HFTB	30 Piece Metric Tool Set with TB-103 Metal Tool Box
MSM-30HF	30 Piece Tool Set Only - Packed in Keep Safe Foam System

Contents Include:

Drive Tools:

Product Code	Description	Product Code	Description
M-52EHA	5 1/2" Enclosed Head Ratchet	M-106A	Spinner Handle
M-102	2" Extension	M-140A	Universal Joint
M-115	6" Extension	M-42A	Flex Handle

Shallow 6-Point Sockets

Product Code	Size (MM)
MM-604	4
MM-605	5
MM-605.5	5 1/2
MM-606	6
MM-607	7
MM-608	8
MM-609	9
MM-610	10
MM-611	11
MM-612	12
MM-613	13
MM-614	14

Deep 6-Point Sockets

Product Code	Size (MM)
MMD-604	4
MMD-605	5
MMD-605.5	5 1/2
MMD-606	6
MMD-607	7
MMD-608	8
MMD-609	9
MMD-610	10
MMD-611	11
MMD-612	12
MMD-613	13
MMD-614	14

Features

Made in U.S.A.

- Keep-Safe-Foam system keeps tools organized and helps prevent loss.
- All tools are professional quality, made of high-grade chrome vanadium steel.
- Sockets feature SUPERTORQUE® lobular openings for greater turning power without deforming the fastener.
- Metal tool box made for years of rugged use.

MSM-30HFTB

WILLIAMS

17 PIECE 1/4" DRIVE SOCKET AND DRIVE TOOL SET

6 Point Metric, Packed in Exclusive Keep-Safe-Foam System with Metal Box

Product Code	Description
MSM-17HFTB	17 Piece Metric Tool Set with TB-101 Metal Tool Box
MSM-17HF	17 Piece Tool Set Only - Packed in Keep Safe Foam System

Contents Include:

Drive Tools:

Product Code	Description	Product Code	Description
M-52EHA	5-1/2" Enclosed Head Ratchet	M-106A	Spinner Handle
M-102	2" Extension	M-140A	Universal Joint
M-115	6" Extension		

Shallow 6-Point Sockets

Product Code	Size (MM)	Product Code	Size (MM)
MM-604	4	MM-609	9
MM-605	5	MM-610	10
MM-605.5	5.5	MM-611	11
MM-606	6	MM-612	12
MM-607	7	MM-613	13
MM-608	8	MM-614	14

Features

Made in U.S.A.

- Keep-Safe-Foam system keeps tools organized and helps prevent loss.
- All tools are professional quality, made of high-grade chrome vanadium steel.
- Sockets feature SUPERTORQUE® lobular openings for greater turning power without deforming the fastener.
- Metal tool box made for years of rugged use.

MSM-17HFTB

WILLIAMS®

6 12 F

95 PIECE 1/4" & 3/8" DRIVE MASTER SOCKET & TOOL SET

50611

Features

- All tools are professional quality, made of high-grade chrome vanadium steel.
- Sockets feature SUPERTORQUE® lobular openings for greater turning power without deforming the fastener.
- Packed in rugged high-density polyethylene (HDPE) cases that are strong and durable yet light in weight.
- Case is shock proof at both high and low temperatures, equipped with heavy-duty metal latches and hinges.
- Two-component handles are easy to grip and comfortable to carry.

6 & 12 Point Rugged-Case-System Tool Set, SAE

Product Code	Description
50611	95 Piece Master Socket, Wrench, and Screwdriver Set

Contents Include:

1/4" Drive Tools:

Product Code	Description
30001	36 Tooth Quick-Release Ratchet
30002	1 1/2" Extension
30003	3" Extension
30005	Flex Handle
30006	Spinner Handle
30007	Universal Joint
30009	1/4" F x 3/8" M Adapter

1/4" Drive Shallow 6-Point Sockets

Product Code	Size (Inches)
30106	3/16
30107	7/32
30108	1/4
30109	9/32
30110	5/16
30111	11/32
30112	3/8
30114	7/16
30116	1/2
30118	9/16

1/4" Drive Deep 6-Point Sockets

Product Code	Size (Inches)
30306	3/16
30307	7/32
30308	1/4
30309	9/32
30310	5/16
30311	11/32
30312	3/8
30314	7/16
30316	1/2
30318	9/16

1/4" Drive Hex Bit Sockets

Product Code	Size (Inches)
35000	1/8
35001	5/32
35002	3/16
35003	7/32
35004	1/4
35005	5/16

3/8" Drive Tools:

Product Code	Description
31001	38 Tooth Quick-Release Ratchet
31002	3" Extension
31003	6" Extension
31004	10" Extension
31005	10" Flex Handle
31006	Universal Joint
31007	Sliding T-Handle
31008	3/8" F x 1/4" M Adapter
31009	3/8" F x 1/2" M Adapter

Comfort Grip Screwdrivers

Product Code	Description
24205	3/16" x 4" Slotted
24219	1/4" x 4" Slotted
24249	#1 x 3" Phillips®
24253	#2 x 4" Phillips®

1/4" Drive Hex Bit Sockets

Product Code	Size (MM)
35070	3
35071	4
35072	5
35073	6
35074	7
35075	8

1/4" Drive Screwdriver Bit Sockets

Product Code	Description
35040	5/32" Slotted Tip
35041	7/32" Slotted Tip
35042	9/32" Slotted Tip
35050	#0 Phillips® Tip
35051	#1 Phillips® Tip
35052	#2 Phillips® Tip

1/4" Drive Torx® Bit Sockets

Product Code	Size
35080	T10
35081	T15
35082	T20
35083	T25
35084	T27
35085	T30

3/8" Drive Shallow 6-Point Sockets

Product Code	Size (Inches)
31112	3/8
31114	7/16
31116	1/2
31118	9/16
31120	5/8
31122	11/16
31124	3/4
31126	13/16
31128	7/8
31130	15/16
31132	1

3/8" Drive Deep 12-Point Sockets

Product Code	Size (Inches)
31412	3/8
31414	7/16
31416	1/2
31418	9/16
31420	5/8
31422	11/16
31424	3/4
31426	13/16
31428	7/8
31430	15/16
31432	1

12 Point Combination Wrenches

Product Code	Size (Inches)
11108	1/4
11110	5/16
11112	3/8
11114	7/16
11116	1/2
11118	9/16
11120	5/8
11122	11/16
11124	3/4

WILLIAMS

47 PIECE 1/4" DRIVE 47 PIECE DELUXE SOCKET SET

6 Point Rugged-Case-System Tool Set, SAE and Metric

Product Code	Description
50601	47 Piece Deluxe 6-Point 1/4" Drive Socket Set

Contents Include:

Drive Tools:

Product Code	Description
30001	36 Tooth Quick-Release Ratchet
30002	1 1/2" Extension
30003	3" Extension
30005	Flex Handle

Shallow 6-Point Sockets

Product Code	Size (Inches)
30106	3/16
30107	7/32
30108	1/4
30109	9/32
30110	5/16
30111	11/32
30112	3/8
30114	7/16
30116	1/2
30118	9/16

Shallow 6-Point Sockets

Product Code	Size (MM)
30504	4
30505	5
30599	5 1/2
30506	6
30507	7
30508	8
30509	9
30510	10
30511	11
30512	12
30513	13
30514	14

Product Code	Description
30006	Spinner Handle
30007	Universal Joint
30010	Ratchet Spinner

Hex Bit Sockets

Product Code	Size (Inches)
35000	1/8
35001	5/32
35002	3/16
35003	7/32
35004	1/4
35005	5/16

Hex Bit Sockets

Product Code	Size (MM)
35070	3
35071	4
35072	5
35073	6
35074	7
35075	8

Screwdriver Bit Sockets

Product Code	Description
35040	5/32" Slotted Tip
35041	7/32" Slotted Tip
35042	9/32" Slotted Tip
35050	#0 Phillips® Tip
35051	#1 Phillips® Tip
35052	#2 Phillips® Tip

50601

Features

- All tools are professional quality, made of high-grade chrome vanadium steel
- Sockets feature SUPERTORQUE® lobular openings for greater turning power without deforming the fastener.
- Packed in rugged high-density polyethylene (HDPE) cases that are strong and durable yet light in weight.
- Case is shock proof at both high and low temperatures, equipped with heavy-duty metal latches and hinges.
- Two-component handles are easy to grip and comfortable to carry.

WILLIAMS

32 PIECE 1/4" & 3/8" DRIVE BIT SOCKET SET

6 Point Compact Case Tool Set, SAE & MM

Product Code	Description
50681	32 Piece 1/4" & 3/8" Drive Bit Socket Set

Contents Include:

1/4" Drive Torx Bit Socket

Product Code	Description
35080	T10
35081	T15
35082	T20
35083	T25
35084	T27

3/8" Drive Torx Bit Socket

Product Code	Description
35185	T40
35186	T45
35187	T45
35188	T50

3/8" Drive Hex Bit Socket

Product Code	Size (MM)
35170	4
35171	5
35172	6
35173	7
35174	8
35175	9
35176	10

3/8" Drive Slotted Socket

Product Code	Size (SAE)
35140	1/4
35141	5/16
35142	3/8
35143	7/16

3/8" Drive Phillips Socket

Product Code	Description
35150	#1
35151	#2
35152	#3

3/8" Drive Hex Bit Socket

Product Code	Size (SAE)
35100	1/8
35101	9/64
35102	5/32
35103	3/16
35104	7/32
35105	1/4
35106	5/16
35107	3/8

50681

Features

- All tools are professional quality, made of high-grade chrome vanadium steel
- Sockets feature SUPERTORQUE® lobular openings for greater turning power without deforming the fastener
- Packed in rugged compact high-density polyethylene (HDPE) cases that are strong and durable yet light in weight

50661

Features

- All tools are professional quality, made of high-grade chrome vanadium steel
- Sockets feature SUPERTORQUE® lobular openings for greater turning power without deforming the fastener
- Packed in rugged compact high-density polyethylene (HDPE) cases that are strong and durable yet light in weight

WILLIAMS® 6 F M

27 PIECE 1/4" DRIVE SOCKET AND DRIVE TOOL SET

6 Point Compact Case Tool Set, SAE and Metric

Product Code	Description
50661	27 Piece 1/4" Drive Socket and Drive Tool Set

Contents Include:

1/4" Drive Tools:		1/4" Drive Shallow 6 Point Sockets:		1/4" Drive Shallow 6 Point Sockets:	
Product Code	Description	Product Code	Size (Inches)	Product Code	Size (mm)
30001	5 1/4" Pear Head Ratchet	30106	3/16	30504	4
30002	1 1/2" Extension	30107	7/32	30505	5
30004	6" Extension	30108	1/4	30599	5.5
30006	Spinner Handle	30109	9/32	30506	6
30007	Universal Joint	30110	5/16	30507	7
		30111	11/32	30508	8
		30112	3/8	30509	9
		30114	7/16	30510	10
		30116	1/2	30511	11
		30118	9/16	30512	12
				30513	13
				30514	14

50662

Features

- All tools are professional quality, made of high-grade chrome vanadium steel
- Sockets feature SUPERTORQUE® lobular openings for greater turning power without deforming the fastener
- Packed in rugged compact high-density polyethylene (HDPE) cases that are strong and durable yet light in weight

WILLIAMS® 6 F

21 PIECE 1/4" DRIVE SOCKET AND DRIVE TOOL SET

6 Point Compact Case Tool Set, SAE

Product Code	Description
50662	21 Piece 1/4" Drive Socket and Drive Tool Set

Contents Include:

1/4" Drive Tools:		1/4" Drive Shallow 6 Point Sockets:		1/4" Drive Deep 6 Point Sockets:	
Product Code	Description	Product Code	Size (Inches)	Product Code	Size (SAE)
30001	5 1/4" Pear Head Ratchet	30106	3/16	30308	1/4
30003	1 1/2" Extension	30107	7/32	30309	9/32
30004	3" Extension	30108	1/4	30310	5/16
30006	Spinner Handle	30109	9/32	30311	11/32
30007	6" Extension	30110	5/16	30312	3/8
		30111	11/32	30314	7/16
		30112	3/8	30316	1/2
		30114	7/16		
		30116	1/2		

50672

Features

- All tools are professional quality, made of high-grade chrome vanadium steel
- Sockets feature SUPERTORQUE® lobular openings for greater turning power without deforming the fastener
- Packed in rugged compact high-density polyethylene (HDPE) cases that are strong and durable yet light in weight

WILLIAMS® 12 F M

27 PIECE 1/4" DRIVE SOCKET AND DRIVE TOOL SET

12 Point Compact Case Tool Set, SAE & MM

Product Code	Description
50672	27 Piece 1/4" Drive Socket and Drive Tool Set

Contents Include:

1/4" Drive Tools:		1/4" Drive Shallow 12 Point Sockets:		1/4" Drive Shallow 12 Point Sockets:	
Product Code	Description	Product Code	Size (Inches)	Product Code	Size (mm)
30001	5-1/4" Pear Head Ratchet	30206	3/16	30604	4
30002	1-1/2" Extension	30207	7/32	30605	5
30004	6" Extension	30208	1/4	30699	5.5
30006	Spinner Handle	30209	9/32	30606	6
30007	Universal Joint	30210	5/16	30607	7
		30211	11/32	30608	8
		30212	3/8	30609	9
		30214	7/16	30610	10
		30216	1/2	30611	11
		30218	9/16	30612	12
				30613	13
				30614	14

BAHCO WILLIAMS

1/4" DRIVE ENCLOSED HEAD RATCHETS

Sealed Narrow Head Design, Chrome and Black Industrial Finish

Product Code	Description	Length (Inches)	Number of Teeth
M-52EHA	Chrome Finish Enclosed Head Ratchet	5 1/4	36
M-52EHFA	Chrome Finish Flex Head Ratchet	7	36
MB-52EHA	Black Industrial Finish Enclosed Head Ratchet	5 1/4	36
M-52EHRKA	Repair Kit for Enclosed Head Ratchets		

Fed. Spec: ANSI B107.10M

Made in U.S.A.

Bi-Mold Comfort Grip Handles

Product Code	Description	Length (Inches)	Number of Teeth
6950	Comfort Grip Enclosed Head Ratchet	5	72

Features

- Enclosed head is sealed to prevent dust, dirt, and liquids from entering head, preserving internal lubrication.
- Forged one-piece ratchet provide strength and safety for industrial applications.
- 36 tooth gear with 10 degree of engagement allows engagement in tight working areas.
- Nickel/Chrome plating provides increase protection from rust and corrosion.
- Chrome finish models feature mirror-like exterior that can be easily cleaned after each use.
- Single Pawl ratchet design:
  - Designed for tighter tolerances between pawl and gear which reduces metal fatigue and slippage under load.
  - Does not require as many working parts, reducing possible breakage and parts to repair.
- Easy access reverse lever allows user to change working direction quickly and easily with only one hand.

MB-52EHA

M-52EHFA

M-52EHA

6950

WILLIAMS

1/4" DRIVE ROUND HEAD RATCHET

High-Polished Chrome Finish

Product Code	Description	Length (Inches)	Number of Teeth
M-52A	Chrome Finish Round Head Ratchet	5	72
M-52ARK	Repair Kit for Round Head Ratchet		

Fed. Spec: ANSI B107.10M

Made in U.S.A.

Features

- Double pawl design with 72 teeth action provides a 5° ratcheting angle.
- Shift lever reverses action instantly.
- Knurled handle provides a non-slip grip.
- Chrome plating provides increased protection from rust and corrosion.

M-52A

WILLIAMS

1/4" DRIVE HANDLES

High-Polished Chrome Finish

Product Code	Description	Length (Inches)
M-106A	Spinner Handle	6
M-15A	Speeder Handle	15 1/2
M-42A	Flex Handle Breaker Bar	5 3/4
M-42RK	Repair Kit for Flex Handle	

Fed. Spec: ANSI B107.10M

Made in U.S.A.

Features

- Chrome plating provides increased protection from rust and corrosion.
- Drive handles provide extra leverage with greater strength than ratchets.
- Spinner handle features 1/4" drive female handle end.

M-42A

M-106A

M-20A

WILLIAMS®

1/4" DRIVE EXTENSIONS

High-Polished Chrome Finish

Product Code	Description	Length (Inches)
M-102	Extension	2
M-104	Extension	4
M-115	Extension	6
M-110	Extension	10
M-124	Extension	24
MFE-6	Flexible Extension	6
M-140A	Universal Joint	1 7/16

Fed. Spec: ANSI B107.10M

Made in U.S.A.

Features

- Chrome plating provides increased protection from rust and corrosion.
- Flexible extension is designed for low torque applications in limited access areas.
- Ball and spring socket retention.

WILLIAMS®

1/4" DRIVE ADAPTORS

High-Polished Chrome and Black Industrial Finish

Product Code	Length (Inches)	Male End (Inches)	Female End (Inches)
Chrome Finish			
MB-130	1	3/8	1/4
Black Finish			
MB-130B	1	3/8	1/4
MB-131BA	1 1/8	1/4	3/8

Fed. Spec: ANSI B107.10M

Made in U.S.A.

Features

- Ball and spring socket retention.

WILLIAMS®

1/4" DRIVE RATCHETS AND HANDLES

High-Polished Chrome Finish

Product Code	Description	Length (Inches)
30001	36 Tooth Quick-Release Ratchet	5 1/4
30011	Ultra-Fine 60-Tooth Ratchet	5 1/4
30005	Flex Handle	6
30008	Sliding T-Handle	4 1/2
30006	Spinner Handle	6 3/8
30012	Square Drive Ratchet Wrench	5

Fed. Spec: ANSI B107.10M

Features

- Ball and spring socket retention.
- Williams 1/4" Drive Ratchets Feature:
  - * Ultra-fine 60 tooth model offers 6° tooth action in a narrow pear head.
  - * Unique Finger-Fit handles to provide a comfortable, non-slip grip and extra turning power.
  - * Choice of 36-tooth quick-release or 60-tooth ultra-fine gear.
  - * Narrow pear-shaped heads for access into confined work areas.
  - * High-polished chrome finish for easy cleaning.
- Spinner handle features bi-mold comfort-grip handle.
- 30012 - Drives 1/4" Drive Sockets & 1/4" Hex Bits

WILLIAMS®

1/4" DRIVE EXTENSIONS AND ACCESSORIES

High-Polished Chrome Finish

Product Code	Description	Length (Inches)
30002	Extension	1 1/2
30003	Extension	3
30004	Extension	6
30007	Universal Joint Extension	1 3/8
30009	Adaptor, 1/4" F x 3/8" M	1
30013	Holder for 1/4" Hex Screwdriver Bits	3/4

Fed. Spec: ANSI B107.10M

Features

- Chrome plating provides increased protection from rust and corrosion.
- Ball and spring socket retention.

30004

30003

30002

30013

30009

30007

WILLIAMS®

6 PIECE 1/4" DRIVE RATCHET AND DRIVE TOOL SET

Furnished in a Vinyl Pouch

Product Code	Description
30920	6 Piece 1/4" Drive Ratchet and Accessory Set

Contents Include:

Product Code	Description	Product Code	Description
30001	36 Tooth Quick-Release Ratchet	30005	Flex Handle
30002	1 1/2" Extension	30006	Spinner Handle
30004	6" Extension	30007	Universal Joint

Features

- All tools are professional quality, made of high-grade chrome vanadium steel.
- Sockets feature SUPERTORQUE® lobular openings for greater turning power without deforming the fastener.

30920

WILLIAMS®

1/4" DRIVE SHALLOW 12 POINT SOCKETS, SAE

High-Polished Chrome Finish

		A	B	C	D	E		F
Product Code	Size (Inches)	OAL (Inches)	Drive End Diameter (Inches)	Working End Diameter (Inches)	Broach Depth (Inches)	Bolt Clearance Depth (Inches)	Bolt Clearance Diameter (Inches)	Nose Length (Inches)
M-1208	1/4	7/8	15/32	3/8	7/32	17/32	7/32	7/16
M-1210	5/16	7/8	15/32	15/32	9/32	17/32	7/32	-
M-1211	11/32	7/8	1/2	1/2	9/32	17/32	11/32	-
M-1212	3/8	7/8	17/32	17/32	9/32	17/32	3/8	-
M-1214	7/16	7/8	19/32	19/32	3/8	17/32	7/16	-
M-1216	1/2	7/8	11/16	11/16	3/8	17/32	1/2	-
M-1218	9/16	29/32	3/4	3/4	3/8	17/32	7/32	-

Fed. Spec: ANSI B107.1

M-1208 M-1212

WSM-7RC 7 Piece 1/4" Drive Shallow 12-Point Socket Set on Clip Rail

Contents Include:

Product Code	Size (Inches)	Product Code	Size (Inches)	Product Code	Size (Inches)	Product Code	Size (Inches)
M-1208	1/4	M-1211	11/32	M-1214	7/16	M-1218	9/16
M-1210	5/16	M-1212	3/8	M-1216	1/2		

WSM-7RC

Features

- SUPERTORQUE® lobular openings for greater turning power without deforming the fastener.
- Designed for quick engagement on both 6 and 12 point fasteners.

USA Made in U.S.A.

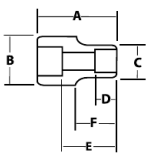

M-610 M-606

WSM-11 HRC

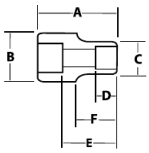

WILLIAMS®

1/4" DRIVE SHALLOW SOCKETS, 6 POINT, SAE

High-Polished Chrome Finish

Product Code	Size (Inches)	A OAL (Inches)	B Drive End Diameter (Inches)	C Working End Diameter (Inches)	D Broach Depth (Inches)	E Bolt Clearance Depth (Inches)	Bolt Clearance Diameter (Inches)	F Nose Length (Inches)
M-604	1/8	7/8	15/32	7/32	1/8	17/32	1/8	7/16
M-605	5/32	7/8	15/32	7/32	1/8	17/32	5/32	7/16
M-606	3/16	7/8	15/32	7/32	1/8	17/32	3/16	7/16
M-607	7/32	7/8	15/32	7/32	1/8	17/32	7/32	7/16
M-608	1/4	7/8	15/32	7/32	1/8	17/32	7/32	7/16
M-609	9/32	7/8	15/32	7/32	1/8	17/32	1/4	7/16
M-610	5/16	7/8	15/32	7/32	1/8	17/32	1/4	7/16
M-611	11/32	7/8	1/2	1/2	11/32	17/32	11/32	-
M-612	3/8	7/8	9/16	9/16	15/32	17/32	3/8	-
M-614	7/16	7/8	5/8	5/8	15/32	17/32	7/16	-
M-616	1/2	7/8	11/16	11/16	15/32	17/32	1/2	-
M-618	9/16	29/32	3/4	3/4	1/2	17/32	17/32	-
M-620	5/8	31/32	27/32	27/32	9/16	5/8	9/16	-

Fed. Spec: ANSI B107.1

WSM-11HRC 11 Piece 1/4" Drive Shallow 6 Point Socket Set on Clip Rail

Contents Include:

Product Code	Size (Inches)	Product Code	Size (Inches)	Product Code	Size (Inches)	Product Code	Size (Inches)
M-605	5/32	M-608	1/4	M-611	11/32	M-616	1/2
M-606	3/16	M-609	9/32	M-612	3/8	M-618	9/16
M-607	7/32	M-610	5/16	M-614	7/16		

Features

- SUPERTORQUE® lobular openings for greater turning power without deforming the fastener.
- Designed for maximum engagement on 6 point fasteners.

Made in U.S.A.

30210 30206

30923

WILLIAMS®

1/4" DRIVE SHALLOW SOCKETS, 12 POINT, SAE

High-Polished Chrome Finish

Product Code	Size (Inches)	A OAL (Inches)	B Drive End Diameter (Inches)	C Working End Diameter (Inches)	D Broach Depth (Inches)	E Bolt Clearance Depth (Inches)	Bolt Clearance Diameter (Inches)	F Nose Length (Inches)
30206	3/16	1	15/32	5/16	9/32	19/32	3/16	1/2
30207	7/32	1	15/32	11/32	5/16	19/32	7/32	1/2
30208	1/4	1	15/32	3/8	5/16	19/32	7/32	1/2
30209	9/32	1	15/32	7/16	5/16	19/32	1/4	1/2
30210	5/16	1	15/32	15/32	5/16	19/32	1/4	-
30211	11/32	1	1/2	1/2	5/16	19/32	11/32	-
30212	3/8	1	9/16	9/16	11/32	19/32	3/8	-
30214	7/16	1	5/8	5/8	7/16	19/32	7/16	-
30216	1/2	1	11/16	11/16	7/16	19/32	1/2	-
30218	9/16	1	3/4	3/4	7/16	19/32	17/32	-

Fed. Spec: ANSI B107.1

30923 10 Piece 1/4" Drive Shallow 12 Point Socket Set on Clip Rail

Contents Include:

Product Code	Size (Inches)	Product Code	Size (Inches)	Product Code	Size (Inches)	Product Code	Size (Inches)
30206	3/16	30209	9/32	30212	3/8	30218	9/16
30207	7/32	30210	5/16	30214	7/16		
30208	1/4	30211	11/32	30216	1/2		

Features

- SUPERTORQUE® lobular openings for greater turning power without deforming the fastener.
- Designed for maximum engagement on both 6 and 12 point fasteners.

WILLIAMS®

1/4" DRIVE SHALLOW SOCKETS, 6 POINT, SAE

High-Polished Chrome Finish

Product Code	Size (Inches)	A OAL (Inches)	B Drive End Diameter (Inches)	C Working End Diameter (Inches)	D Broach Depth (Inches)	E Bolt Clearance Depth (Inches)	Bolt Clearance Diameter (Inches)	F Nose Length (Inches)
30106	3/16	1	15/32	5/16	9/32	19/32	3/16	1/2
30107	7/32	1	15/32	11/32	5/16	19/32	7/32	1/2
30108	1/4	1	15/32	3/8	5/16	19/32	7/32	1/2
30109	9/32	1	15/32	7/16	5/16	19/32	1/4	1/2
30110	5/16	1	15/32	15/32	5/16	19/32	1/4	-
30111	11/32	1	1/2	1/2	5/16	19/32	11/32	-
30112	3/8	1	9/16	9/16	11/32	19/32	3/8	-
30114	7/16	1	5/8	5/8	7/16	19/32	7/16	-
30116	1/2	1	11/16	11/16	7/16	19/32	1/2	-
30118	9/16	1	3/4	3/4	7/16	19/32	17/32	-

Fed. Spec: ANSI B107.1

30110 30106

30922 10 Piece 1/4" Drive Shallow 6 Point Socket Set on Clip Rail

Contents Include:

Product Code	Size (Inches)	Product Code	Size (Inches)	Product Code	Size (Inches)	Product Code	Size (Inches)
30106	3/16	30109	9/32	30112	3/8	30118	9/16
30107	7/32	30110	5/16	30114	7/16		
30108	1/4	30111	11/32	30116	1/2		

30922

Features

- SUPERTORQUE® lobular openings for greater turning power without deforming the fastener.
- Designed for maximum engagement on 6 point fasteners.

WILLIAMS®

1/4" DRIVE SHALLOW SOCKETS, 8 POINT, SAE

High-Polished Chrome Finish

Product Code	Size (Inches)	A OAL (Inches)	B Drive End Diameter (Inches)	C Working End Diameter (Inches)	D Broach Depth (Inches)	E Bolt Clearance Depth (Inches)	Bolt Clearance Diameter (Inches)	F Nose Length (Inches)
M-808	1/4	7/8	15/32	7/16	1/4	17/32	1/4	7/16
M-810	5/16	7/8	9/16	9/16	9/32	17/32	1/4	-
M-812	3/8	7/8	21/32	21/32	5/16	17/32	3/8	-

M-810

Features

- SUPERTORQUE® lobular openings for greater turning power without deforming the fastener.
- Designed for quick engagement on both 4 and 8 point fasteners.

Made in U.S.A.

WILLIAMS®

1/4" DRIVE DEEP SOCKETS, 12 POINT, SAE

High-Polished Chrome Finish

Product Code	Size (Inches)	A OAL (Inches)	B Drive End Diameter (Inches)	C Working End Diameter (Inches)	D Broach Depth (Inches)	E Bolt Clearance Depth (Inches)	Bolt Clearance Diameter (Inches)	F Nose Length (Inches)
MD-1210	5/16	2	15/32	7/16	9/32	1 11/16	9/32	1 9/16
MD-1211	11/32	2	1/2	1/2	9/32	1 21/32	11/32	-
MD-1212	3/8	2	17/32	17/32	9/32	1 21/32	3/8	-
MD-1214	7/16	2	19/32	19/32	3/8	1 21/32	13/32	-
MD-1216	1/2	2	11/16	11/16	3/8	1 21/32	15/32	-
MD-1218	9/16	2	3/4	3/4	3/8	1 21/32	17/32	-

Fed. Spec: ANSI B107.1

MD-1216 MD-1210

WSMD-6RC 6 Piece 1/4" Drive Deep 12 Point Socket Set on Clip Rail

Contents Include:

Product Code	Size (Inches)	Product Code	Size (Inches)	Product Code	Size (Inches)
MD-1210	5/16	MD-1212	3/8	MD-1216	1/2
MD-1211	11/32	MD-1214	7/16	MD-1218	9/16

WSMD-6RC

Features

- SUPERTORQUE® lobular openings for greater turning power without deforming the fastener.
- Designed for quick engagement on both 6 and 12 point fasteners.

Made in U.S.A.

MD-605 MD-618

WILLIAMS®

1/4" DRIVE DEEP SOCKETS, 6 POINT, SAE

High-Polished Chrome Finish

Product Code	Size (Inches)	A OAL (Inches)	B Drive End Diameter (Inches)	C Working End Diameter (Inches)	D Broach Depth (Inches)	Bolt Clearance Diameter (Inches)	F Nose Length (Inches)
MD-605	5/32	2	15/32	9/32	5/32	5/32	1 9/16
MD-606	3/16	2	15/32	5/16	3/16	3/16	1 9/16
MD-607	7/32	2	15/32	11/32	7/32	7/32	1 9/16
MD-608	1/4	2	15/32	3/8	7/32	7/32	1 9/16
MD-609	9/32	2	15/32	13/32	1/4	9/32	1 9/16
MD-610	5/16	2	15/32	7/16	9/32	9/32	1 9/16
MD-611	11/32	2	1/2	1/2	9/32	11/32	-
MD-612	3/8	2	17/32	17/32	9/32	3/8	-
MD-614	7/16	2	19/32	19/32	3/8	13/32	-
MD-616	1/2	2	11/16	11/16	3/8	15/32	-
MD-618	9/16	2	3/4	3/4	3/8	17/32	-

Fed. Spec: ANSI B107.1

WSMD-10HRC

WSMD-10HRC 10 Piece 1/4" Drive Deep 6 Point Socket Set on Clip Rail

Contents Include:

Product Code	Size (Inches)	Product Code	Size (Inches)	Product Code	Size (Inches)	Product Code	Size (Inches)
MD-606	3/16	MD-609	9/32	MD-612	3/8	MD-618	9/16
MD-607	7/32	MD-610	5/16	MD-614	7/16		
MD-608	1/4	MD-611	11/32	MD-616	1/2		

Features

- SUPERTORQUE® lobular openings for greater turning power without deforming the fastener.
- Designed for maximum engagement on 6 point fasteners.

USA Made in U.S.A.

WILLIAMS®

1/4" DRIVE DEEP SOCKETS, 12 POINT, SAE

High-Polished Chrome Finish

Product Code	Size (Inches)	A OAL (Inches)	B Drive End Diameter (Inches)	C Working End Diameter (Inches)	D Broach Depth (Inches)	E Bolt Clearance Depth (Inches)	Bolt Clearance Diameter (Inches)	F Nose Length (Inches)
30406	3/16	1 31/32	15/32	5/16	5/16	1 5/16	1/8	1 1/32
30407	7/32	1 31/32	15/32	11/32	3/8	1 5/16	3/16	15/16
30408	1/4	1 31/32	15/32	7/16	13/16	1 11/32	7/32	1 1/32
30409	9/32	1 31/32	15/32	7/16	25/32	1 11/32	1/4	31/32
30410	5/16	1 31/32	15/32	15/32	13/16	1 5/16	9/32	-
30411	11/32	1 31/32	1/2	1/2	23/32	1 5/16	9/32	-
30412	3/8	1 31/32	9/16	9/16	7/8	1 11/32	5/16	-
30414	7/16	1 31/32	5/8	5/8	7/8	1 1/2	13/32	-
30416	1/2	1 31/32	11/16	11/16	27/32	1 17/32	7/16	-
30418	9/16	1 31/32	3/4	3/4	29/32	1 9/16	17/32	-

Fed. Spec: ANSI B107.1

30410 30406

30937

30937 10 Piece 1/4" Drive Deep 12 Point Socket Set on Clip Rail

Contents Include:

Product Code	Size (Inches)	Product Code	Size (Inches)	Product Code	Size (Inches)	Product Code	Size (Inches)
30406	3/16	30409	9/32	30412	3/8	30418	9/16
30407	7/32	30410	5/16	30414	7/16		
30408	1/4	30411	11/32	30416	1/2		

Features

- SUPERTORQUE® lobular openings for greater turning power without deforming the fastener.
- Designed for maximum engagement on 12 point fasteners.

WILLIAMS®

1/4" DRIVE DEEP SOCKETS, 6 POINT, SAE

High-Polished Chrome Finish

Product Code	Size (Inches)	A OAL (Inches)	B Drive End Diameter (Inches)	C Working End Diameter (Inches)	D Broach Depth (Inches)	E Bolt Clearance Depth (Inches)	Bolt Clearance Diameter (Inches)	F Nose Length (Inches)
30306	3/16	1 31/32	15/32	5/16	5/16	1 5/16	1/8	1 1/32
30307	7/32	1 31/32	15/32	11/32	3/8	1 5/16	3/16	15/16
30308	1/4	1 31/32	15/32	7/16	13/16	1 11/32	7/32	1 1/32
30309	9/32	1 31/32	15/32	7/16	25/32	1 11/32	1/4	31/32
30310	5/16	1 31/32	15/32	15/32	13/16	1 5/16	9/32	-
30311	11/32	1 31/32	1/2	1/2	23/32	1 5/16	9/32	-
30312	3/8	1 31/32	9/16	9/16	7/8	1 11/32	5/16	-
30314	7/16	1 31/32	5/8	5/8	7/8	1 1/2	13/32	-
30316	1/2	1 31/32	11/16	11/16	27/32	1 17/32	7/16	-
30318	9/16	1 31/32	3/4	3/4	29/32	1 9/16	17/32	-

Fed. Spec: ANSI B107.1

30924 10 Piece 1/4" Drive Deep 6 Point Socket Set on Clip Rail

30924

Contents Include:

Product Code	Size (Inches)	Product Code	Size (Inches)	Product Code	Size (Inches)	Product Code	Size (Inches)
30306	3/16	30309	9/32	30312	3/8	30318	9/16
30307	7/32	30310	5/16	30314	7/16		
30308	1/4	30311	11/32	30316	1/2		

Features

- SUPERTORQUE® lobular openings for greater turning power without deforming the fastener.
- Designed for maximum engagement on 6 point fasteners.

WILLIAMS®

1/4" DRIVE SHALLOW SOCKETS, 6 POINT, METRIC

High-Polished Chrome Finish

Product Code	Size (MM)	A OAL (Inches)	B Drive End Diameter (Inches)	C Working End Diameter (Inches)	D Broach Depth (Inches)	E Bolt Clearance Depth (Inches)	Bolt Clearance Diameter (Inches)	F Nose Length (Inches)
MM-604	4	7/8	15/32	9/32	3/16	17/32	5/32	7/16
MM-605	5	7/8	15/32	5/16	3/16	17/32	9/32	7/16
MM-605.5	5.5	7/8	15/32	11/32	3/16	17/32	7/32	7/16
MM-606	6	7/8	15/32	3/8	7/32	17/32	7/32	7/16
MM-607	7	7/8	15/32	13/32	1/4	17/32	1/4	7/16
MM-608	8	7/8	15/32	15/32	9/32	17/32	1/4	7/16
MM-609	9	7/8	1/2	1/2	1/2	17/32	5/16	-
MM-610	10	7/8	9/16	9/16	1/2	17/32	3/8	-
MM-611	11	7/8	19/32	19/32	1/2	17/32	13/32	-
MM-612	12	7/8	21/32	21/32	1/2	17/32	7/16	-
MM-613	13	7/8	23/32	23/32	15/32	17/32	15/32	-
MM-614	14	29/32	3/4	3/4	1/2	17/32	17/32	-

Fed. Spec: ANSI B107.5

MSM-12HRC 12 Piece 1/4" Drive Shallow 6 Point Socket Set on Clip Rail

MSM-12HRC

Contents Include:

Product Code	Size (MM)	Product Code	Size (MM)	Product Code	Size (MM)	Product Code	Size (MM)
MM-604	4	MM-606	6	MM-609	9	MM-612	12
MM-605	5	MM-607	7	MM-610	10	MM-613	13
MM-605.5	5 1/2	MM-608	8	MM-611	11	MM-614	14

Features

- SUPERTORQUE® lobular openings for greater turning power without deforming the fastener.
- Designed for maximum engagement on 6 point fasteners.

USA Made in U.S.A.

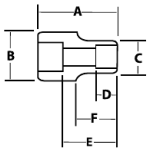

30925

WILLIAMS®

1/4" DRIVE SHALLOW SOCKETS, 12 POINT, METRIC

High-Polished Chrome Finish

Product Code	Size (MM)	A OAL (Inches)	B Drive End Diameter (Inches)	C Working End Diameter (Inches)	D Broach Depth (Inches)	E Bolt Clearance Depth (Inches)	Bolt Clearance Diameter (Inches)	F Nose Length (Inches)
30604	4	1	15/32	1/4	1/4	19/32		1/2
30605	5	1	15/32	5/16	5/16	19/32		1/2
30699	5.5	1	15/32	11/32	15/32	19/32		1/2
30606	6	1	15/32	11/32	5/16	19/32		1/2
30607	7	1	15/32	7/16	5/16	15/32		1/2
30608	8	1	15/32	15/32	3/8	1/2		-
30609	9	1	17/32	17/32	3/8	21/32		-
30610	10	1	19/32	19/32	1/2	7/8		-
30611	11	1	5/8	5/8	17/32	7/8		-
30612	12	1	11/16	11/16	1/2	7/8		-
30613	13	1	23/32	23/32	1/2	7/8		-
30614	14	1	3/4	3/4	1/2	7/8		-

Fed. Spec: ANSI B107.5

30925 12 Piece 1/4" Drive Shallow 12 Point Socket Set on Clip Rail

Contents Include:

Product Code	Size (MM)	Product Code	Size (MM)	Product Code	Size (MM)	Product Code	Size (MM)
30604	4	30606	6	30609	9	30612	12
30605	5	30607	7	30610	10	30613	13
30699	5.5	30608	8	30611	11	30614	14

Features

- SUPERTORQUE® lobular openings for greater turning power without deforming the fastener.
- Designed for maximum engagement on 12 point fasteners.

30926

WILLIAMS®

1/4" DRIVE SHALLOW SOCKETS, 6 POINT, METRIC

High-Polished Chrome Finish

Product Code	Size (MM)	A OAL (Inches)	B Drive End Diameter (Inches)	C Working End Diameter (Inches)	D Broach Depth (Inches)	E Bolt Clearance Depth (Inches)	Bolt Clearance Diameter (Inches)	F Nose Length (Inches)
30504	4	1	15/32	1/4	1/4	19/32		1/2
30505	5	1	15/32	5/16	5/16	19/32		1/2
30599	5.5	1	15/32	11/32	15/32	19/32		1/2
30506	6	1	15/32	11/32	5/16	19/32		1/2
30507	7	1	15/32	7/16	5/16	15/32		1/2
30508	8	1	15/32	15/32	3/8	1/2		-
30509	9	1	17/32	17/32	3/8	21/32		-
30510	10	1	19/32	19/32	1/2	7/8		-
30511	11	1	5/8	5/8	17/32	7/8		-
30512	12	1	11/16	11/16	1/2	7/8		-
30513	13	1	23/32	23/32	1/2	7/8		-
30514	14	1	3/4	3/4	1/2	7/8		-

Fed. Spec: ANSI B107.5

30926 12 Piece 1/4" Drive Shallow 6 Point Socket Set on Clip Rail

Contents Include:

Product Code	Size (MM)	Product Code	Size (MM)	Product Code	Size (MM)	Product Code	Size (MM)
30504	4	30506	6	30509	9	30512	12
30505	5	30507	7	30510	10	30513	13
30599	5.5	30508	8	30511	11	30514	14

Features

- SUPERTORQUE® lobular openings for greater turning power without deforming the fastener.
- Designed for maximum engagement on 6 point fasteners.

WILLIAMS®

1/4" DRIVE DEEP SOCKETS, 6 POINT, METRIC

High-Polished Chrome Finish

		A	B	C	D	E		F
Product Code	Size (MM)	OAL (Inches)	Drive End Diameter (Inches)	Working End Diameter (Inches)	Broach Depth (Inches)	Bolt Clearance Depth (Inches)	Bolt Clearance Diameter (Inches)	Nose Length (Inches)
MMD-604	4	2	15/32	9/32	3/16	1 21/32	1/8	9/16
MMD-605	5	2	15/32	5/16	3/16	1 21/32	5/32	9/16
MMD-605.5	5.5	2	15/32	5/16	7/32	1 21/32	7/32	9/16
MMD-606	6	2	15/32	3/8	7/32	1 21/32	7/32	9/16
MMD-607	7	2	15/32	13/32	1/4	1 21/32	1/4	9/16
MMD-608	8	2	15/32	15/32	9/32	1 21/32	1/4	9/16
MMD-609	9	2	1/2	1/2	9/32	1 21/32	5/16	-
MMD-610	10	2	9/16	9/16	9/32	1 21/32	3/8	-
MMD-611	11	2	19/32	19/32	3/8	1 21/32	13/32	-
MMD-612	12	2	21/32	21/32	3/8	1 21/32	7/16	-
MMD-613	13	2	23/32	23/32	3/8	1 21/32	15/32	-
MMD-614	14	2	3/4	3/4	7/16	1 21/32	17/32	-

Fed. Spec: ANSI B107.5

MMD-614 MMD-606

MSMD-12HRC 12 Piece 1/4" Drive Deep 6 Point Socket Set on Clip Rail

Contents Include:

Product Code	Size (MM)	Product Code	Size (MM)	Product Code	Size (MM)	Product Code	Size (MM)
MMD-604	4	MMD-606	6	MMD-609	9	MMD-612	12
MMD-605	5	MMD-607	7	MMD-610	10	MMD-613	13
MMD-605.5	5.5	MMD-608	8	MMD-611	11	MMD-614	14

MSMD-12HRC

Features

- SUPERTORQUE® lobular openings for greater turning power without deforming the fastener.
- Designed for maximum engagement on 6 point fasteners.

Made in U.S.A.

WILLIAMS®

1/4" DRIVE DEEP SOCKETS, 12 POINT, METRIC

High-Polished Chrome Finish

		A	B	C	D	E		F
Product Code	Size (MM)	OAL (Inches)	Drive End Diameter (Inches)	Working End Diameter (Inches)	Broach Depth (Inches)	Bolt Clearance Depth (Inches)	Bolt Clearance Diameter (Inches)	Nose Length (Inches)
30804	4	2	15/32	9/32	3/16	1 21/32	1/8	9/16
30805	5	2	15/32	5/16	3/16	1 21/32	5/32	9/16
30855	5.5	2	15/32	5/16	7/32	1 21/32	7/32	9/16
30806	6	2	15/32	3/8	7/32	1 21/32	7/32	9/16
30807	7	2	15/32	13/32	1/4	1 21/32	1/4	9/16
30808	8	2	15/32	15/32	9/32	1 21/32	1/4	9/16
30809	9	2	1/2	1/2	9/32	1 21/32	5/16	-
30810	10	2	9/16	9/16	9/32	1 21/32	3/8	-
30811	11	2	19/32	19/32	3/8	1 21/32	13/32	-
30812	12	2	21/32	21/32	3/8	1 21/32	7/16	-
30813	13	2	23/32	23/32	3/8	1 21/32	15/32	-
30814	14	2	3/4	3/4	7/16	1 21/32	17/32	-

Fed. Spec: ANSI B107.5

30808 30804

30941 12 Piece 1/4" Drive Deep 12 Point Socket Set on Clip Rail

Contents Include:

Product Code	Size (MM)	Product Code	Size (MM)	Product Code	Size (MM)	Product Code	Size (MM)
30804	4	30806	6	30809	9	30812	12
30805	5	30807	7	30810	10	30813	13
30855	5.5	30808	8	30811	11	30814	14

30941

Features

- SUPERTORQUE® lobular openings for greater turning power without deforming the fastener.
- Designed for maximum engagement on both 6 and 12 point fasteners.

30708 30704

30939

WILLIAMS®

1/4" DRIVE DEEP SOCKETS, 6 POINT, METRIC

High-Polished Chrome Finish

		A	B	C	D	E		F
Product Code	Size (MM)	OAL (Inches)	Drive End Diameter (Inches)	Working End Diameter (Inches)	Broach Depth (Inches)	Bolt Clearance Depth (Inches)	Bolt Clearance Diameter (Inches)	Nose Length (Inches)
30704	4	2	15/32	9/32	3/16	1 21/32	1/8	9/16
30705	5	2	15/32	5/16	3/16	1 21/32	5/32	9/16
30755	5.5	2	15/32	5/16	7/32	1 21/32	7/32	9/16
30706	6	2	15/32	3/8	7/32	1 21/32	7/32	9/16
30707	7	2	15/32	13/32	1/4	1 21/32	1/4	9/16
30708	8	2	15/32	15/32	9/32	1 21/32	1/4	9/16
30709	9	2	1/2	1/2	9/32	1 21/32	5/16	-
30710	10	2	9/16	9/16	9/32	1 21/32	3/8	-
30711	11	2	19/32	19/32	3/8	1 21/32	13/32	-
30712	12	2	21/32	21/32	3/8	1 21/32	7/16	-
30713	13	2	23/32	23/32	3/8	1 21/32	15/32	-
30714	14	2	3/4	3/4	7/16	1 21/32	17/32	-

Fed. Spec: ANSI B107.5

30939 12 Piece 1/4" Drive Deep 6 Point Socket Set on Clip Rail

Contents Include:

Product Code	Size (MM)	Product Code	Size (MM)	Product Code	Size (MM)	Product Code	Size (MM)
30704	4	30706	6	30709	9	30712	12
30705	5	30707	7	30710	10	30713	13
30755	5.5	30708	8	30711	11	30714	14

Features

- SUPERTORQUE® lobular openings for greater turning power without deforming the fastener.
- Designed for maximum engagement on 6 point fasteners.

MA-4A

WSM-11TRC

WILLIAMS®

1/4" DRIVE STANDARD LENGTH HEX BIT SOCKETS, SAE

High-Polished Chrome Finish

Product Code	Size (Inches)	Socket Length (Inches)	Socket Outside Diameter (Inches)	Overall Length (Inches)	Replacement Bit Product Code
MA-050A	.050	7/8	15/32	1 1/2	BITH050-01
MA-2A	1/16	7/8	15/32	1 1/2	BITH02-01
MA-2 1/2A	5/64	7/8	15/32	1 1/2	BITH2.5-01
MA-3A	3/32	7/8	15/32	1 1/2	BITH03-01
MA-3 1/2A	7/64	7/8	15/32	1 1/2	BITH3.5-01
MA-4A	1/8	7/8	15/32	1 1/2	BITH04-01
MA- 4 1/2A	9/64	7/8	15/32	1 1/2	BITH4.5-01
MA-5A	5/32	7/8	15/32	1 1/2	BITH05-01
MA-6A	3/16	7/8	15/32	1 1/2	BITH06-01
MA-7A	7/32	7/8	15/32	1 1/2	BITH07-01
MA-8A	1/4	7/8	15/32	1 1/2	BITH08-01
MA-10A	5/16	7/8	15/32	1 1/2	BITH10-01

WSM-11TRC 11 Piece Hex Bit Socket Set on Clip Rail

Contents Include:

Product Code	Size (Inches)	Product Code	Size (Inches)	Product Code	Size (Inches)
MA-2A	1/16	MA-4A	1/8	MA-7A	7/32
MA-2 1/2A	5/64	MA-4 1/2A	9/64	MA-8A	1/4
MA-3A	3/32	MA-5A	5/32	MA-10A	5/16
MA-3 1/2A	7/64	MA-6A	3/16		

Features

- High-polished chrome finish socket cleans easily.
- Two piece design allows bits to be replaced easily.

Made in U.S.A.

WILLIAMS

1/4" DRIVE STANDARD LENGTH HEX BIT SOCKETS, SAE

High-Polished Chrome Finish

Product Code	Size (Inches)	Socket Length (Inches)	Socket Outside Diameter (Inches)	Overall Length (Inches)	Bit Length (Inches)
35000	1/8	13/16	15/32	1 13/32	5/8
35001	5/32	13/16	15/32	1 13/32	5/8
35002	3/16	13/16	15/32	1 13/32	5/8
35003	7/32	13/16	15/32	1 13/32	5/8
35004	1/4	13/16	15/32	1 13/32	5/8
35005	5/16	13/16	15/32	1 13/32	5/8

35000

30902 6 Piece Hex Bit Socket Set on Clip Rail

Contents Include:

Product Code	Size (Inches)	Product Code	Size (Inches)	Product Code	Size (Inches)
35000	1/8	35002	3/16	35004	1/4
35001	5/32	35003	7/32	35005	5/16

30902

Features

- High-polished chrome finish socket cleans easily.

WILLIAMS

1/4" DRIVE STANDARD LENGTH HEX BIT SOCKETS, METRIC

High-Polished Chrome Finish

Product Code	Size (MM)	Socket Length (Inches)	Socket Outside Diameter (Inches)	Overall Length (Inches)	Bit Length (Inches)
35070	3	13/16	15/32	1 13/32	5/8
35071	4	13/16	15/32	1 13/32	5/8
35072	5	13/16	15/32	1 13/32	5/8
35073	6	13/16	15/32	1 13/32	5/8
35074	7	13/16	15/32	1 13/32	5/8
35075	8	13/16	15/32	1 13/32	5/8

35070

30904 6 Piece Hex Bit Socket Set on Clip Rail

Contents Include:

Product Code	Size (MM)	Product Code	Size (MM)	Product Code	Size (MM)
35070	3	35072	5	35074	7
35071	4	35073	6	35075	8

30904

Features

- High-polished chrome finish socket cleans easily.

WILLIAMS

1/4" DRIVE BALL TIP HEX BIT SOCKETS, SAE

High-Polished Chrome Finish

Product Code	Size (Inches)	Socket Length (Inches)	Socket Outside Diameter (Inches)	Overall Length (Inches)	Replacement Bit Product Code (Inches)
MA-3HBA	3/32	7/8	15/32	1 1/2	BITHB03-01
MA-4HBA	1/8	7/8	15/32	1 1/2	BITHB04-01
MA-4½HBA	9/64	7/8	15/32	1 1/2	BITHB4.5-01
MA-5HBA	5/32	7/8	15/32	1 1/2	BITHB05-01
MA-6HBA	3/16	7/8	15/32	1 1/2	BITHB06-01
MA-7HBA	7/32	7/8	15/32	1 1/2	BITHB07-01
MA-8HBA	1/4	7/8	15/32	1 1/2	BITHB08-01

MA-3HBA

WSM-7HBA 7 Piece Ball Tip Hex Bit Socket Set on Clip Rail

Contents Include:

Product Code	Size (Inches)	Product Code	Size (Inches)	Product Code	Size (Inches)
MA-3HBA	3/32	MA-5HBA	5/32	MA-8HBA	1/4
MA-4HBA	1/8	MA-6HBA	3/16		
MA-4½HBA	9/64	MA-7HBA	7/32		

WSM-7HBA

Features

- High-polished chrome finish socket cleans easily.
- Two piece design allows bits to be replaced easily.

Made in U.S.A.

MA-5LA

WSMS-9LRC

WILLIAMS®

1/4" DRIVE LONG HEX BIT SOCKETS, SAE

High-Polished Chrome Finish

Product Code	Size (Inches)	Socket Length (Inches)	Socket Outside Diameter (Inches)	Overall Length (Inches)	Replacement Bit Product Code
MA-3LA	3/32	7/8	15/32	3	BITH03-02
MA-3 1/2LA	7/64	7/8	15/32	3	BITH3.5-02
MA-4LA	1/8	7/8	15/32	3	BITH04-02
MA-4 1/2LA	9/64	7/8	15/32	3	BITH4.5-02
MA-5LA	5/32	7/8	15/32	3	BITH05-02
MA-6LA	3/16	7/8	15/32	3	BITH06-02
MA-7LA	7/32	7/8	15/32	3	BITH07-02
MA-8LA	1/4	7/8	15/32	3	BITH08-02
MA-10LA	5/16	7/8	15/32	3	BITH10-02

WSMS-9LRC 9 Piece Long Hex Bit Socket Set on Clip Rail

Contents Include:

Product Code	Size (Inches)	Product Code	Size (Inches)	Product Code	Size (Inches)
MA-3LA	3/32	MA-4 1/2LA	9/64	MA-7LA	7/32
MA-3 1/2LA	7/64	MA-5LA	5/32	MA-8LA	1/4
MA-4LA	1/8	MA-6LA	3/16	MA-10LA	5/16

Features
- High-polished chrome finish socket cleans easily.
- Two piece design allows bits to be replaced easily.

Made in U.S.A.

35020

30943

WILLIAMS®

1/4" DRIVE LONG LENGTH HEX BIT SOCKETS, SAE

High-Polished Chrome Finish

Product Code	Size (Inches)	Socket Length (Inches)	Socket Outside Diameter (Inches)	Overall Length (Inches)	Bit Length (Inches)
35020	1/8	13/16	15/32	3	5/8
35021	5/32	13/16	15/32	3	5/8
35022	3/16	13/16	15/32	3	5/8
35023	7/32	13/16	15/32	3	5/8
35024	1/4	13/16	15/32	3	5/8
35025	5/16	13/16	15/32	3	5/8

30943 6 Piece Hex Bit Socket Set on Clip Rail

Contents Include:

Product Code	Size (Inches)	Product Code	Size (Inches)	Product Code	Size (Inches)
35020	1/8	35022	3/16	35024	1/4
35021	5/32	35023	7/32	35025	5/16

Features
- High-polished chrome finish socket cleans easily.

35063

30945

WILLIAMS®

1/4" DRIVE LONG LENGTH HEX BIT SOCKETS, METRIC

High-Polished Chrome Finish

Product Code	Size (MM)	Socket Length (Inches)	Socket Outside Diameter (Inches)	Overall Length (Inches)	Bit Length (Inches)
35063	3	13/16	15/32	3	5/8
35064	4	13/16	15/32	3	5/8
35065	5	13/16	15/32	3	5/8
35066	6	13/16	15/32	3	5/8
35067	7	13/16	15/32	3	5/8
35068	8	13/16	15/32	3	5/8

30945 6 Piece Hex Bit Socket Set on Clip Rail

Contents Include:

Product Code	Size (MM)	Product Code	Size (MM)	Product Code	Size (MM)
35063	3	35065	5	35067	7
35064	4	35066	6	35068	8

Features
- High-polished chrome finish socket cleans easily.

WILLIAMS®

1/4" DRIVE STUBBY HEX BIT SOCKETS, SAE

High-Polished Chrome Finish

Product Code	Size (Inches)	Socket Length (Inches)	Socket Outside Diameter (Inches)	Overall Length (Inches)	Replacement Bit Product Code
MA-4SA	1/8	7/8	15/32	1 1/16	TMAXS4E2
MA-4.5SA	9/64	7/8	15/32	1 1/16	TMAXS4.5E2
MA-5SA	5/32	7/8	15/32	1 1/16	TMAXS5E2
MA-6SA	3/16	7/8	15/32	1 1/16	TMAXS6E2

MA-45A

WSM-4TRC 4 Piece Stubby Hex Bit Socket Set on Clip Rail

Contents Include:

Product Code	Size (Inches)	Product Code	Size (Inches)
MA-4SA	1/8	MA-5SA	5/32
MA-4.5SA	9/64	MA-6SA	3/16

WSM-4TRC

Features

- High-polished chrome finish socket cleans easily.
- Two piece design allows bits to be replaced easily.
- Extra-short bits provide access in confined areas.

Made in U.S.A.

WILLIAMS®

1/4" DRIVE TORX® BIT SOCKETS

High-Polished Chrome Finish

Product Code	Torx® Size	Socket Length (Inches)	Socket Outside Diameter (Inches)	Overall Length (Inches)	Bit Length (Inches)
35080	T10	13/16	1/2	1 13/32	5/8
35081	T15	13/16	1/2	1 13/32	5/8
35082	T20	13/16	1/2	1 13/32	5/8
35083	T25	13/16	1/2	1 13/32	5/8
35084	T27	13/16	1/2	1 13/32	5/8
35085	T30	13/16	1/2	1 13/32	5/8

35080

30908 6 Piece Torx® Bit Socket Set on Clip Rail

Contents Include:

Product Code	Torx® Size	Product Code	Torx® Size	Product Code	Torx® Size
35080	T10	35082	T20	35084	T27
35081	T15	35083	T25	35085	T30

30908

Features

- High-polished chrome finish socket cleans easily.

WILLIAMS®

1/4" DRIVE SCREWDRIVER BIT SOCKETS

High-Polished Chrome Finish, Phillips® and Slotted

Product Code	Tip Size (Inches)	Socket Length (Inches)	Socket Outside Diameter (Inches)	Overall Length (Inches)	Bit Length (Inches)
Slotted Bits:					
35040	5/32	13/16	15/32	1 13/32	5/8
35041	7/32	13/16	15/32	1 13/32	5/8
35042	9/32	13/16	15/32	1 13/32	5/8
Phillips® Bits:					
35050	#0	13/16	15/32	1 13/32	5/8
35051	#1	13/16	15/32	1 13/32	5/8
35052	#2	13/16	15/32	1 13/32	5/8

30906

30906 6 Piece Screwdriver Bit Socket Set on Clip Rail

Contents Include:

Product Code	Tip Size (Inches)	Product Code	Tip Size (Inches)	Product Code	Tip Size
35040	5/32	35042	9/32	35051	#1
35041	7/32	35050	#0	35052	#2

Features

- High-polished chrome finish socket cleans easily.

WSB-56TB

WILLIAMS

56 PIECE 3/8" DRIVE SOCKET AND DRIVE TOOL SET

8 & 12 Point SAE, with Metal Box

Product Code	Description
WSB-56TB	56 Piece Tool Set with TB-104 Metal Tool Box (Keep-Safe-Foam is not included)
WSB-56F	56 Piece Tool Set Only Packed in Keep-Safe-Foam System

Contents Include:

Drive Tools:

Product Code	Description
B-52EHA	8" Enclosed Head Ratchet
B-108	3" Extension
B-110	6" Extension
B-115	11" Extension

Drive Tools:

Product Code	Description
B-40A	8 9/16" Flex Handle
B-140A	Universal Joint
B-20A	Sliding T-Handle

Shallow 12-Point Sockets

Product Code	Size (Inches)
B-1208	1/4
B-1210	5/16
B-1212	3/8
B-1214	7/16
B-1216	1/2
B-1218	9/16
B-1220	5/8
B-1222	11/16
B-1224	3/4
B-1226	13/16
B-1228	7/8
B-1230	15/16
B-1232	1

Deep 12-Point Sockets

Product Code	Size (Inches)
BD-1212	3/8
BD-1214	7/16
BD-1216	1/2
BD-1218	9/16
BD-1220	5/8
BD-1222	11/16
BD-1224	3/4
BD-1226	13/16
BD-1228	7/8
BD-1230	15/16
BD-1232	1

Shallow 8-Point Sockets

Product Code	Size (Inches)
BD-808	1/4
BD-810	5/16
BD-812	3/8
BD-814	7/16
BD-816	1/2

Shallow 12-Point Universal Sockets

Product Code	Size (Inches)
BU-1212	3/8
BU-1214	7/16
BU-1216	1/2
BU-1218	9/16
BU-1220	5/8
BU-1222	11/16
BU-1224	3/4

Standard Hex Bit Sockets

Product Code	Size (Inches)
BA-4A	1/8
BA-5A	5/32
BA-6A	3/16
BA-7A	7/32
BA-8A	1/4
BA-10A	5/16
BA-12A	3/8

Screwdriver Bit Sockets

Product Code	Size
BA-7A-2S	7/32" x .040"
BA-10A-3S	9/32" x .045"
BA-10A-4S	5/16" x .055"
BA-7A-2P	#2
BA-10A-3P	#3
BA-12A-4P	#4

Features

- All tools are professional quality, made of high-grade chrome vanadium steel.
- Sockets feature SUPERTORQUE® lobular openings for greater turning power without deforming the fastener.
- Metal tool box made for years of rugged use.

USA Made in U.S.A.

WILLIAMS

32 PIECE 3/8" DRIVE SOCKET AND DRIVE TOOL SET

8 & 12 Point SAE, Packed in Exclusive Keep-Safe-Foam System with Metal Box

Product Code	Description
WSB-32FTB	32 Piece Tool Set with TB-104 Metal Tool Box
WSB-32F	32 Piece Tool Set Only - Packed in Keep Safe Foam System

Contents Include:

Drive Tools:

Product Code	Description
B-52EHA	8" Enclosed Head Ratchet
B-108	3" Extension
B-110	6" Extension

Drive Tools:

Product Code	Description
B-115	11" Extension
B-40A	8 9/16" Flex Handle
B-140A	Universal Joint

Shallow 12-Point Sockets

Product Code	Size (Inches)
B-1212	3/8
B-1214	7/16
B-1216	1/2
B-1218	9/16
B-1220	5/8
B-1222	11/16
B-1224	3/4
B-1226	13/16
B-1228	7/8

Deep 12-Point Sockets

Product Code	Size (Inches)
BD-1212	3/8
BD-1214	7/16
BD-1216	1/2
BD-1218	9/16
BD-1220	5/8
BD-1222	11/16
BD-1224	3/4
BD-1226	13/16
BD-1228	7/8

Shallow 8-Point Sockets

Product Code	Size (Inches)
BD-808	1/4
BD-810	5/16
BD-812	3/8

Shallow 12-Point Universal Sockets

Product Code	Size (Inches)
BU-1212	3/8
BU-1214	7/16
BU-1216	1/2
BU-1218	9/16
BU-1220	5/8

Made in U.S.A.

Features

- Keep-Safe-Foam system keeps tools organized and helps prevent loss
- All tools are professional quality, made of high-grade chrome vanadium steel
- Sockets feature SUPERTORQUE® lobular openings for greater turning power without deforming the fastener
- Metal tool box made for years of rugged use.

WSB-32FTB

WSB-27FTB

WILLIAMS

27 PIECE 3/8" DRIVE SOCKET AND DRIVE TOOL SET

12 Point SAE, Packed in Exclusive Keep-Safe-Foam System with Metal Box

Product Code	Description
WSB-27FTB	27 Piece Tool Set with TB-104 Metal Tool Box
WSB-27F	27 Piece Tool Set Only - Packed in Keep Safe Foam System

Contents Include:

Drive Tools:

Product Code	Description
B-52EHA	8" Enclosed Head Ratchet
B-108	3" Extension
B-110	6" Extension

Drive Tools:

Product Code	Description
B-40A	8 9/16" Flex Handle
B-140A	Universal Joint

Shallow 12-Point Sockets

Product Code	Size (Inches)
B-1208	1/4
B-1210	5/16
B-1212	3/8
B-1214	7/16
B-1216	1/2
B-1218	9/16
B-1220	5/8
B-1222	11/16
B-1224	3/4
B-1226	13/16
B-1228	7/8
B-1230	15/16
B-1232	1

Deep 12-Point Sockets

Product Code	Size (Inches)
BD-1212	3/8
BD-1214	7/16
BD-1216	1/2
BD-1218	9/16
BD-1220	5/8
BD-1222	11/16
BD-1224	3/4
BD-1226	13/16
BD-1228	7/8

Features

Made in U.S.A.

- Keep-Safe-Foam system keeps tools organized and helps prevent loss.
- All tools are professional quality, made of high-grade chrome vanadium steel.
- Sockets feature SUPERTORQUE® lobular openings for greater turning power without deforming the fastener.
- Metal tool box made for years of rugged use.

WSB-23HFTB

WILLIAMS

23 PIECE 3/8" DRIVE SOCKET AND DRIVE TOOL SET

6 Point SAE, Packed in Exclusive Keep-Safe-Foam System with Metal Box

Product Code	Description
WSB-23HFTB	23 Piece Tool Set with TB-102 Metal Tool Box
WSB-23HF	23 Piece Tool Set Only - Packed in Keep Safe Foam System

Contents Include:

Drive Tools:

Product Code	Description
B-52EHA	8" Enclosed Head Ratchet
B-108	3" Extension
B-110	6" Extension

Drive Tools:

Product Code	Description
B-40A	8 9/16" Flex Handle
B-140A	Universal Joint

Shallow 6-Point Sockets

Product Code	Size (Inches)
B-612	3/8
B-614	7/16
B-616	1/2
B-618	9/16
B-620	5/8
B-622	11/16
B-624	3/4
B-626	13/16
B-628	7/8

Deep 6-Point Sockets

Product Code	Size (Inches)
BD-612	3/8
BD-614	7/16
BD-616	1/2
BD-618	9/16
BD-620	5/8
BD-622	11/16
BD-624	3/4
BD-626	13/16
BD-628	7/8

Features

Made in U.S.A.

- Keep-Safe-Foam system keeps tools organized and helps prevent loss.
- All tools are professional quality, made of high-grade chrome vanadium steel.
- Sockets feature SUPERTORQUE® lobular openings for greater turning power without deforming the fastener.
- Metal tool box made for years of rugged use.

WILLIAMS

23 PIECE 3/8" DRIVE SOCKET AND DRIVE TOOL SET

12 Point SAE, Packed in Exclusive Keep-Safe-Foam System with Metal Box

Product Code	Description
WSB-23FTB	23 Piece Tool Set with TB-102 Metal Tool Box
WSB-23F	23 Piece Tool Set Only - Packed in Keep Safe Foam System

Contents Include:

Drive Tools:

Product Code	Description
B-52EHA	8" Enclosed Head Ratchet
B-108	3" Extension
B-110	6" Extension

Drive Tools:

Product Code	Description
B-40A	8 9/16" Flex Handle
B-140A	Universal Joint

Shallow 12-Point Sockets

Product Code	Size (Inches)
B-1212	3/8
B-1214	7/16
B-1216	1/2
B-1218	9/16
B-1220	5/8
B-1222	11/16
B-1224	3/4
B-1226	13/16
B-1228	7/8

Deep 12-Point Sockets

Product Code	Size (Inches)
BD-1212	3/8
BD-1214	7/16
BD-1216	1/2
BD-1218	9/16
BD-1220	5/8
BD-1222	11/16
BD-1224	3/4
BD-1226	13/16
BD-1228	7/8

Features

Made in U.S.A.

- Keep-Safe-Foam system keeps tools organized and helps prevent loss.
- All tools are professional quality, made of high-grade chrome vanadium steel.
- Sockets feature SUPERTORQUE® lobular openings for greater turning power without deforming the fastener.
- Metal tool box made for years of rugged use.

WSB-23FTB

WILLIAMS

15 PIECE 3/8" DRIVE SOCKET AND DRIVE TOOL SET

12 Point SAE, Packed in Exclusive Keep-Safe-Foam System with Metal Box

Product Code	Description
WSB-15FTB	15 Piece Tool Set with TB-102 Metal Tool Box
WSB-15F	15 Piece Tool Set Only - Packed in Keep Safe Foam System

Contents Include:

Drive Tools:

Product Code	Description
B-52EHA	8" Enclosed Head Ratchet
B-108	3" Extension
B-110	6" Extension
B-115	11" Extension
B-40A	8 9/16" Flex Handle
B-140A	Universal Joint

Shallow 12-Point Sockets

Product Code	Size (Inches)
B-1212	3/8
B-1214	7/16
B-1216	1/2
B-1218	9/16
B-1220	5/8
B-1222	11/16
B-1224	3/4
B-1226	13/16
B-1228	7/8

Features

Made in U.S.A.

- Keep-Safe-Foam system keeps tools organized and helps prevent loss.
- All tools are professional quality, made of high-grade chrome vanadium steel.
- Sockets feature SUPERTORQUE® lobular openings for greater turning power without deforming the fastener.
- Metal tool box made for years of rugged use.

WSB-15FTB

WSB-12HFTB

WILLIAMS

12 PIECE 3/8" DRIVE SOCKET AND DRIVE TOOL SET

6 Point SAE, Packed in Exclusive Keep-Safe-Foam System with Metal Box

Product Code	Description
WSB-12HFTB	12 Piece Tool Set with TB-101 Metal Tool Box
WSB-12HF	12 Piece Tool Set Only - Packed in Keep Safe Foam System

Contents Include:

Drive Tools:

Product Code	Description
B-52EHA	8" Enclosed Head Ratchet
B-108	3" Extension
B-110	6" Extension

Shallow 12-Point Sockets

Product Code	Size (Inches)
B-612	3/8
B-614	7/16
B-616	1/2
B-618	9/16
B-620	5/8
B-622	11/16
B-624	3/4
B-626	13/16
B-628	7/8

Features

Made in U.S.A.

- Keep-Safe-Foam system keeps tools organized and helps prevent loss.
- All tools are professional quality, made of high-grade chrome vanadium steel.
- Sockets feature SUPERTORQUE® lobular openings for greater turning power without deforming the fastener.
- Metal tool box made for years of rugged use.

WSMB-29FTB

WILLIAMS

29 PIECE 3/8" DRIVE SOCKET AND DRIVE TOOL SET

6 & 12 Point SAE & Metric, Packed in Exclusive Keep-Safe-Foam System with Metal Box

Product Code	Description
WSMB-29FTB	29 Piece Tool Set with TB-103 Metal Tool Box
WSMB-29F	29 Piece Tool Set Only - Packed in Keep Safe Foam System

Contents Include:

Drive Tools:

Product Code	Description
B-52EHA	8" Enclosed Head Ratchet
B-108	3" Extension

Shallow 6-Point Sockets, SAE

Product Code	Size (Inches)
B-608	1/4
B-610	5/16
B-612	3/8
B-614	7/16
B-616	1/2
B-618	9/16

Shallow 12-point Sockets, SAE

Product Code	Size (Inches)
B-1220	5/8
B-1222	11/16
B-1224	3/4
B-1226	13/16
B-1228	7/8

Drive Tools:

Product Code	Description
B-110	6" Extension
B-140A	Universal Joint

Shallow 6-Point Sockets, mm

Product Code	Metric Size (mm)
BM-606	6
BM-607	7
BM-608	8
BM-609	9
BM-610	10
BM-611	11
BM-612	12
BM-613	13
BM-614	14
BM-615	15
BM-616	16
BM-617	17
BM-618	18
BM-619	19

Features

Made in U.S.A.

- Keep-Safe-Foam system keeps tools organized and helps prevent loss.
- All tools are professional quality, made of high-grade chrome vanadium steel.
- Sockets feature SUPERTORQUE® lobular openings for greater turning power without deforming the fastener.
- Metal tool box made for years of rugged use.

WILLIAMS®

39 PIECE 3/8" DRIVE SOCKET AND DRIVE TOOL SET

6 & 12 Point Metric, Packed in Exclusive Keep-Safe-Foam System with Metal Box

Product Code	Description
MSB-39FTB	39 Piece Tool Set with TB-104 Metal Tool Box
MSB-39F	39 Piece Tool Set Only - Packed in Keep Safe Foam System

Contents Include:

Drive Tools:

Product Code	Description
B-52EHA	8" Enclosed Head Ratchet
B-108	3" Extension
B-110	6" Extension
B-115	11" Extension
BFE-8	8" Flexible Extension
B-40A	8 9/16" Flex Handle
B-140A	Universal Joint

Deep 6-Point Sockets

Product Code	Size (MM)
BMD-608	8
BMD-609	9
BMD-610	10
BMD-611	11
BMD-612	12
BMD-613	13
BMD-614	14
BMD-615	15
BMD-616	16
BMD-617	17
BMD-618	18
BMD-619	19

Drive Tools:

Product Code	Description
B-20A	Sliding T-Handle
B-70	Ratchet Spinner

Shallow 12-Point Sockets

Product Code	Size (MM)
BM-1206	6
BM-1207	7
BM-1208	8
BM-1209	9
BM-1210	10
BM-1211	11
BM-1212	12
BM-1213	13
BM-1214	14
BM-1215	15
BM-1216	16
BM-1217	17
BM-1218	18
BM-1219	19
BM-1220	20
BM-1221	21
BM-1222	22
BM-1224	24

Features

Made in U.S.A.

- Keep-Safe-Foam system keeps tools organized and helps prevent loss.
- All tools are professional quality, made of high-grade chrome vanadium steel.
- Sockets feature SUPERTORQUE® lobular openings for greater turning power without deforming the fastener.
- Metal tool box made for years of rugged use.

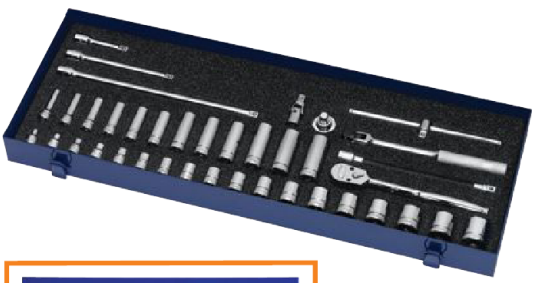

MSB-39FTB

MSB-29HFTB

WILLIAMS

6 M

29 PIECE 3/8" DRIVE SOCKET AND DRIVE TOOL SET

6 Point Metric, Packed in Exclusive Keep-Safe-Foam System with Metal Box

Product Code	Description
MSB-29HFTB	29 Piece Tool Set with TB-103 Metal Tool Box
MSB-29HF	29 Piece Tool Set Only - Packed in Keep Safe Foam System

Contents Include:

Drive Tools:

Product Code	Description
B-52EHA	8" Enclosed Head Ratchet
B-108	3" Extension
B-110	6" Extension

Drive Tools:

Product Code	Description
B-40A	8 9/16" Flex Handle
B-140A	Universal Joint

Shallow 6-Point Sockets

Product Code	Size (MM)
BM-608	8
BM-609	9
BM-610	10
BM-611	11
BM-612	12
BM-613	13
BM-614	14
BM-615	15
BM-616	16
BM-617	17
BM-618	18
BM-619	19

Deep 6-Point Sockets

Product Code	Size (MM)
BMD-608	8
BMD-609	9
BMD-610	10
BMD-611	11
BMD-612	12
BMD-613	13
BMD-614	14
BMD-615	15
BMD-616	16
BMD-617	17
BMD-618	18
BMD-619	19

Features

Made in U.S.A.

- Keep-Safe-Foam system keeps tools organized and helps prevent loss.
- All tools are professional quality, made of high-grade chrome vanadium steel.
- Sockets feature SUPERTORQUE® lobular openings for greater turning power without deforming the fastener.
- Metal tool box made for years of rugged use.

MSB-29FTB

WILLIAMS

6 12 M

29 PIECE 3/8" DRIVE SOCKET AND DRIVE TOOL SET

6 & 12 Point Metric, Packed in Exclusive Keep-Safe-Foam System with Metal Box

Product Code	Description
MSB-29FTB	29 Piece Tool Set with TB-103 Metal Tool Box
MSB-29F	29 Piece Tool Set Only - Packed in Keep Safe Foam System

Contents Include:

Drive Tools:

Product Code	Description
B-52EHA	8" Enclosed Head Ratchet
B-108	3" Extension
B-110	6" Extension

Drive Tools:

Product Code	Description
B-40A	8 9/16" Flex Handle
B-140A	Universal Joint

Shallow 12-Point Sockets

Product Code	Size (MM)
BM-1208	8
BM-1209	9
BM-1210	10
BM-1211	11
BM-1212	12
BM-1213	13
BM-1214	14
BM-1215	15
BM-1216	16
BM-1217	17
BM-1218	18
BM-1219	19

Deep 6-Point Sockets

Product Code	Size (MM)
BMD-608	8
BMD-609	9
BMD-610	10
BMD-611	11
BMD-612	12
BMD-613	13
BMD-614	14
BMD-615	15
BMD-616	16
BMD-617	17
BMD-618	18
BMD-619	19

Features

Made in U.S.A.

- Keep-Safe-Foam system keeps tools organized and helps prevent loss.
- All tools are professional quality, made of high-grade chrome vanadium steel.
- Sockets feature SUPERTORQUE® lobular openings for greater turning power without deforming the fastener.
- Metal tool box made for years of rugged use.

WILLIAMS

18 PIECE 3/8" DRIVE SOCKET AND DRIVE TOOL SET

6 Point Metric, Packed in Exclusive Keep-Safe-Foam System with Metal Box

Product Code	Description
MSB-18HFTB	18 Piece Tool Set with TB-102 Metal Tool Box
MSB-18HF	18 Piece Tool Set Only - Packed in Keep Safe Foam System

Contents Include:

Drive Tools: Product Code	Description	Drive Tools: Product Code	Description
B-52EHA	8" Enclosed Head Ratchet	B-110	6" Extension
B-108	3" Extension	B-140A	Universal Joint

Shallow 6-Point Sockets Product Code	Size (MM)	Shallow 6-Point Sockets Product Code	Size (MM)
BM-606	6	BM-613	13
BM-607	7	BM-614	14
BM-608	8	BM-615	15
BM-609	9	BM-616	16
BM-610	10	BM-617	17
BM-611	11	BM-618	18
BM-612	12	BM-619	19

Features

Made in U.S.A.

- Keep-Safe-Foam system keeps tools organized and helps prevent loss.
- All tools are professional quality, made of high-grade chrome vanadium steel.
- Sockets feature SUPERTORQUE® lobular openings for greater turning power without deforming the fastener.
- Metal tool box made for years of rugged use.

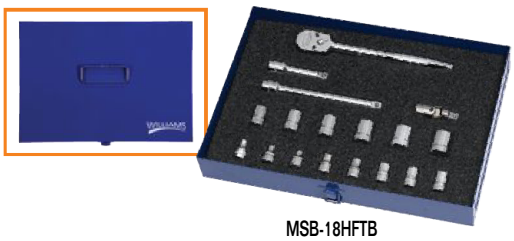

MSB-18HFTB

WILLIAMS

17 PIECE 3/8" DRIVE SOCKET AND DRIVE TOOL SET

12 Point Metric, Packed in Exclusive Keep-Safe-Foam System with Metal Box

Product Code	Description
MSB-17FTB	17 Piece Tool Set with TB-102 Metal Tool Box
MSB-17F	17 Piece Tool Set Only - Packed in Keep Safe Foam System

Contents Include:

Drive Tools: Product Code	Description	Drive Tools: Product Code	Description
B-52EHA	8" Enclosed Head Ratchet	B-40A	8 9/16" Flex Handle
B-108	3" Extension	B-140A	Universal Joint
B-110	6" Extension		

Shallow 12-Point Sockets Product Code	Size (MM)	Shallow 12-Point Sockets Product Code	Size (MM)
BM-1208	8	BM-1214	14
BM-1209	9	BM-1215	15
BM-1210	10	BM-1216	16
BM-1211	11	BM-1217	17
BM-1212	12	BM-1218	18
BM-1213	13	BM-1219	19

Features

Made in U.S.A.

- Keep-Safe-Foam system keeps tools organized and helps prevent loss.
- All tools are professional quality, made of high-grade chrome vanadium steel.
- Sockets feature SUPERTORQUE® lobular openings for greater turning power without deforming the fastener.
- Metal tool box made for years of rugged use.

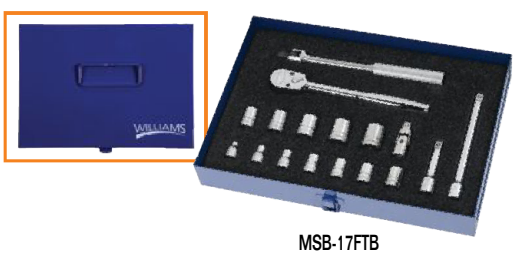

MSB-17FTB

MSB-16FTB

WILLIAMS

16 PIECE 3/8" DRIVE SOCKET AND DRIVE TOOL SET

12 Point Metric, Packed in Exclusive Keep-Safe-Foam System with Metal Box

Product Code	Description
MSB-16FTB	16 Piece Tool Set with TB-102 Metal Tool Box
MSB-16F	16 Piece Tool Set Only - Packed in Keep Safe Foam System

Contents Include:

Drive Tools:

Product Code	Description
B-52EHA	8" Enclosed Head Ratchet
B-108	3" Extension

Shallow 12-Point Sockets

Product Code	Size (MM)
BM-1208	8
BM-1209	9
BM-1210	10
BM-1211	11
BM-1212	12
BM-1213	13
BM-1214	14
BM-1216	16
BM-1217	17
BM-1218	18
BM-1220	20
BM-1221	21
BM-1222	22
BM-1224	24

Features

Made in U.S.A.

- Keep-Safe-Foam system keeps tools organized and helps prevent loss.
- All tools are professional quality, made of high-grade chrome vanadium steel.
- Sockets feature SUPERTORQUE® lobular openings for greater turning power without deforming the fastener.
- Metal tool box made for years of rugged use.

WSBHMD-7

WILLIAMS

7 PIECE 3/8" DRIVE IMPACT DRIVER SET

Packed in Exclusive Keep-Safe-Foam System

Product Code	Description
WSBHMD-7	7 Piece Impact Driver Set

Contents Include:

Product Code	Description
BHMD-30	Hand Impact Driver
BA-7A-2S	7/32" x .040" Slotted Bit Socket
BA-10A-3S	9/32" x .045" Slotted Bit Socket
BA-10A-4S	5/16" x .055" Slotted Bit Socket
BA-7A-2P	#2 Phillips® Bit Socket
BA-10A-3P	#3 Phillips® Bit Socket
BA-12A-4P	#4 Phillips® Bit Socket

Features

Made in U.S.A.

- Ideal for loosening screws that cannot be loosened with an ordinary screwdriver.
- Impact driver is struck with a hammer to provide turning power.
- Hammer blow forces bit into screw head to reduce stripping.
- Hand impact driver can be used with all 3/8" drive sockets, such as 6-point and hex-bit sockets.

WSB-6ADPA

WILLIAMS

6 PIECE ADAPTOR SET

Black Finish and Impact, Furnished on Clip Rail

Product Code	Description
WSB-6ADPA	6 Piece Adaptor Set

Contents Include:

Product Code	Description
MB-130B	1/4" F x 3/8" M, Black Finish
MB-131BA	3/8" F x 1/4" M, Black Finish
BS-130B	3/8" F x 1/2" M, Black Finish
4-2A	1/2" F x 3/8" M, Impact, Black
4-6	1/2" F x 3/4" M, Impact, Black
6-4A	3/4" F x 1/2" M, Impact, Black

Features

Made in U.S.A.

- Impact adaptors are suitable for use on electric and air impact wrenches.
- Black finish adaptors are designed for use with hand drive tools.

WILLIAMS®

95 PIECE 1/4" & 3/8" DRIVE MASTER SOCKET AND TOOL SET

Point Rugged-Case-System Tool Set, SAE

Product Code	Description
50611	95 Piece Master Socket, Wrench and Screwdriver Set

Contents Include:

1/4" Drive Tools:

Product Code	Description
30001	36 Tooth Quick-Release Ratchet
30002	1 ½" Extension
30003	3" Extension
30005	Flex Handle
30006	Spinner Handle
30007	Universal Joint
30009	¼" F x ⅜" M Adapter

1/4" Drive Shallow 6-Point Sockets

Product Code	Size (Inches)
30106	3/16
30107	7/32
30108	1/4
30109	9/32
30110	5/16
30111	11/32
30112	3/8
30114	7/16
30116	1/2
30118	9/16

1/4" Drive Deep 6-Point Sockets

Product Code	Size (Inches)
30306	3/16
30307	7/32
30308	1/4
30309	9/32
30310	5/16
30311	11/32
30312	3/8
30314	7/16
30316	1/2
30318	9/16

1/4" Drive Hex Bit Sockets

Product Code	Size (Inches)
35000	1/8
35001	5/32
35002	3/16
35003	7/32
35004	1/4
35005	5/16

3/8" Drive Tools:

Product Code	Description
31001	38 Tooth Quick-Release Ratchet
31002	3" Extension
31003	6" Extension
31004	10" Extension
31005	10" Flex Handle
31006	Universal Joint
31007	Sliding T-Handle
31008	⅜" F x ¼" M Adapter
31009	⅜" F x ½" M Adapter

Comfort Grip Screwdrivers

Product Code	Description
24205	3/16" x 4" Slotted
24219	¼" x 4" Slotted
24249	#1 x 3" Phillips®
24253	#2 x 4" Phillips®

1/4" Drive Hex Bit Sockets

Product Code	Size (MM)
35070	3
35071	4
35072	5
35073	6
35074	7
35075	8

1/4" Drive Screwdriver Bit Sockets

Product Code	Description
35040	5/32" Slotted Tip
35041	7/32" Slotted Tip
35042	9/32" Slotted Tip
35050	#0 Phillips® Tip
35051	#1 Phillips® Tip
35052	#2 Phillips® Tip

¼" Drive Torx® Bit Sockets

Product Code	Size
35080	T10
35081	T15
35082	T20
35083	T25
35084	T27
35085	T30

3/8" Drive Shallow 6-Point Sockets

Product Code	Size (Inches)
31112	3/8
31114	7/16
31116	1/2
31118	9/16
31120	5/8
31122	11/16
31124	3/4
31126	13/16
31128	7/8
31130	15/16
31132	1

3/8" Drive Deep 12-Point Sockets

Product Code	Size (Inches)
31412	3/8
31414	7/16
31416	1/2
31418	9/16
31420	5/8
31422	11/16
31424	3/4
31426	13/16
31428	7/8
31430	15/16
31432	1

12 Point Combination Wrenches

Product Code	Size (Inches)
11108	1/4
11110	5/16
11112	3/8
11114	7/16
11116	1/2
11118	9/16
11120	5/8
11122	11/16
11124	3/4

50611

Features

- All tools are professional quality, made of high-grade chrome vanadium steel.
- Sockets feature SUPERTORQUE® lobular openings for greater turning power without deforming the fastener.
- Packed in rugged high-density polyethylene (HDPE) cases that are strong and durable yet light in weight.
- Case is shock proof at both high and low temperatures, equipped with heavy-duty metal latches and hinges.
- Two-component handles are easy to grip and comfortable to carry.

WILLIAMS®

6 12 M F

50622

Features

- All tools are professional quality, made of high-grade chrome vanadium steel.
- Sockets feature SUPERTORQUE® lobular openings for greater turning power without deforming the fastener.
- Packed in rugged high-density polyethylene (HDPE) cases that are strong and durable yet light in weight.
- Case is shock proof at both high and low temperatures, equipped with heavy-duty metal latches and hinges.
- Two-component handles are easy to grip and comfortable to carry.

89 PIECE 1/4" & 3/8" DRIVE MASTER SOCKET AND TOOL SET

6 & 12 Point Rugged-Case-System Tool Set, Metric

Product Code	Description
50622	89 Piece Master Socket, Wrench and Screwdriver Set

Contents Include:

1/4" Drive Tools:

Product Code	Description
30001	36 Tooth Quick-Release Ratchet
30002	1½" Extension
30003	3" Extension
30005	Flex Handle
30006	Spinner Handle
30007	Universal Joint
30009	¼" F x ⅜" M Adapter

1/4" Drive Shallow 6-Point Sockets

Product Code	Size (MM)
30504	4
30505	5
30599	5 ½
30506	6
30507	7
30508	8
30509	9
30510	10
30511	11
30512	12
30513	13
30514	14

1/4" Drive Hex Bit Sockets

Product Code	Size (Inches)
35000	1/8
35001	5/32
35002	3/16
35003	7/32
35004	1/4
35005	5/16

1/4" Drive Hex Bit Sockets

Product Code	Size (MM)
35070	3
35071	4
35072	5
35073	6
35074	7
35075	8

1/4" Drive Screwdriver Bit Sockets

Product Code	Description
35040	5/32" Slotted Tip
35041	7/32" Slotted Tip
35042	9/32" Slotted Tip
35050	#0 Phillips® Tip
35051	#1 Phillips® Tip
35052	#2 Phillips® Tip

1/4" Drive Torx® Bit Sockets

Product Code	Size
35080	T10
35081	T15
35082	T20
35083	T25
35084	T27
35085	T30

3/8" Drive Tools:

Product Code	Description
31001	38 Tooth Quick-Release Ratchet
31002	3" Extension
31003	6" Extension
31004	10" Extension
31005	10" Flex Handle
31006	Universal Joint
31007	Sliding T-Handle
31008	⅜" F x ¼" M Adapter
31009	⅜" F x ½" M Adapter

3/8" Drive Shallow 6-Point Sockets

Product Code	Size (MM)
31508	8
31509	9
31510	10
31511	11
31512	12
31513	13
31514	14
31515	15
31516	16
31517	17
31518	18
31519	19

3/8" Drive Deep 12-Point Sockets

Product Code	Size (MM)
31808	8
31809	9
31810	10
31811	11
31812	12
31813	13
31814	14
31815	15
31816	16
31817	17
31818	18
31819	19

Comfort Grip Screwdrivers

Product Code	Description
24205	3/16" x 4" Slotted
24219	¼" x 4" Slotted
24249	#1 x 3" Phillips®
24253	#2 x 4" Phillips®

12 Point Combination Wrenches

Product Code	Size (MM)
11506	6
11508	8
11510	10
11512	12
11513	13
11514	14
11515	15
11517	17
11519	19

WILLIAMS

79 PIECE 3/8" DRIVE DELUXE TOOL SET

6 & 12 Point Rugged-Case-System Tool Set, SAE and Metric, with 1/4" Hex Screwdriver Bits

Product Code	Description
50607	79 Piece 3/8" Drive Deluxe Tool Set

Contents Include:

1/4" Drive Tools:

Product Code	Description
30006	Spinner Handle
30007	Universal Joint
30013	1/4" Hex Bit Holder

3/8" Drive Tools:

Product Code	Description
31001	38 Tooth Quick-Release Ratchet
31002	3" Extension
31003	6" Extension
31004	10" Extension
31005	10" Flex Handle
31006	Universal Joint
31007	Sliding T-Handle
31008	3/8" F x 1/4" M Adapter
31009	3/8" F x 1/2" M Adapter

3/8" Drive Shallow 6-Point Sockets, SAE

Product Code	Size (Inches)
31108	1/4
31110	5/16
31112	3/8
31114	7/16
31116	1/2
31118	9/16
31120	5/8
31122	11/16
31124	3/4
31126	13/16
31128	7/8
31130	15/16
31132	1

3/8" Drive, SAE Deep 12-Point Sockets

Product Code	Size (Inches)
31408	1/4
31410	5/16
31412	3/8
31414	7/16
31416	1/2
31418	9/16
31420	5/8
31422	11/16
31424	3/4
31426	13/16
31428	7/8
31430	15/16
31432	1

3/8" Drive Shallow 6-Point Sockets, Metric

Product Code	Size (MM)
31506	6
31507	7
31508	8
31509	9
31510	10
31511	11
31512	12
31513	13
31514	14
31515	15
31516	16
31517	17
31518	18
31519	19

3/8" Drive Deep 12-Point Sockets, Metric

Product Code	Size (MM)
31806	6
31807	7
31808	8
31809	9
31810	10
31811	11
31812	12
31813	13
31814	14
31815	15
31816	16
31817	17
31818	18
31819	19

1/4" Hex Screwdriver Bits

Product Code	Description / Size
24803	5/32" Slotted Tip
24805	3/16" Slotted Tip
24807	1/4" Slotted Tip
24809	#0 Phillips® Tip
24811	#1 Phillips® Tip
24813	#2 Phillips® Tip
24815	#3 Phillips® Tip
24819	#1 Square Tip
24821	#2 Square Tip
24911	1/8" Hex Tip
24915	5/32" Hex Tip
24919	7/32" Hex Tip
24921	1/4" Hex Tip

50607

Features

- All tools are professional quality, made of high-grade chrome vanadium steel.
- Sockets feature SUPERTORQUE® lobular openings for greater turning power without deforming the fastener.
- Packed in rugged high-density polyethylene (HDPE) cases that are strong and durable yet light in weight.
- Case is shock proof at both high and low temperatures, equipped with heavy-duty metal latches and hinges.
- Two-component handles are easy to grip and comfortable to carry.

WILLIAMS®

50605

Features

- All tools are professional quality, made of high-grade chrome vanadium steel.
- Sockets feature SUPERTORQUE® lobular openings for greater turning power without deforming the fastener.
- Packed in rugged high-density polyethylene (HDPE) cases that are strong and durable yet light in weight.
- Case is shock proof at both high and low temperatures, equipped with heavy-duty metal latches and hinges.
- Two-component handles are easy to grip and comfortable to carry.

63 PIECE 3/8" DRIVE SOCKET, SCREWDRIVER, & WRENCH SET

6 & 12 Point Rugged-Case-System Tool Set, SAE and Metric

Product Code	Description
50605	63 Piece 3/8" Drive Socket, Screwdriver, and Wrench Set

Contents Include:

1/4" Drive Tools:

Product Code	Description
30006	Spinner Handle
30007	Universal Joint
30013	1/4" Hex Bit Holder

3/8" Drive Tools:

Product Code	Description
31001	38 Tooth Quick-Release Ratchet
31002	3" Extension
31003	6" Extension
31004	10" Extension
31005	10" Flex Handle
31006	Universal Joint
31007	Sliding T-Handle
31008	3/8" F x 1/4" M Adapter
31009	3/8" F x 1/2" M Adapter

12 Point Combination Wrenches

Product Code	Size (Inches)
11108	1/4
11110	5/16
11112	3/8
11114	7/16
11116	1/2
11118	9/16
11120	5/8

Comfort Grip Screwdrivers

Product Code	Description
24205	3/16" x 4" Slotted
24219	1/4" x 4" Slotted
24249	#1 x 3" Phillips®
24253	#2 x 4" Phillips®

1/4" Hex Screwdriver Bits

Product Code	Description / Size
24803	5/32" Slotted Tip
24805	3/16" Slotted Tip
24807	1/4" Slotted Tip
24809	#0 Phillips® Tip
24811	#1 Phillips® Tip
24813	#2 Phillips® Tip
24815	#3 Phillips® Tip

3/8" Drive Shallow 6-Point Sockets, SAE

Product Code	Size (Inches)
31108	1/4
31110	5/16
31112	3/8
31114	7/16
31116	1/2
31118	9/16
31120	5/8
31122	11/16
31124	3/4
31126	13/16
31128	7/8
31130	15/16
31132	1

3/8" Drive Shallow 6-Point Sockets, Metric

Product Code	Size (MM)
31506	6
31507	7
31508	8
31509	9
31510	10
31511	11
31512	12
31513	13
31514	14
31515	15
31516	16
31517	17
31518	18
31519	19

1/4" Hex Screwdriver Bits

Product Code	Description / Size
24819	#1 Square Tip
24821	#2 Square Tip
24911	1/8" Hex Tip
24915	5/32" Hex Tip
24919	7/32" Hex Tip
24921	1/4" Hex Tip

WILLIAMS®

58 PIECE 3/8" DRIVE SOCKET, SCREWDRIVER, & PLIERS SET

6 Point Rugged-Case-System Tool Set, SAE and Metric

Product Code	Description
50615	58 Piece 3/8" Drive Socket, Screwdriver and Pliers Set

Contents Include:

1/4" Drive Tools:

Product Code	Description
30006	Spinner Handle
30007	Universal Joint
30013	1/4" Hex Bit Holder

3/8" Drive Tools:

Product Code	Description
31001	38 Tooth Quick-Release Ratchet
31002	3" Extension
31003	6" Extension
31004	10" Extension
31005	10" Flex Handle
31006	Universal Joint
31007	Sliding T-Handle
31008	3/8" F x 1/4" M Adapter
31009	3/8" F x 1/2" M Adapter
31013	1/4" Hex Bit Holder

Adjustable Wrench

Product Code	Size (Inches)
13408	8"

Pliers

Product Code	Description
23102	8" Slip Joint Pliers
23105	9 3/4" Groove Joint Pliers
23407	7" Diagonal Cutting Pliers
23410	6 1/4" Long Nose Pliers W / Cutter

1/4" Hex Screwdriver Bits

Product Code	Description / Size
24803	5/32" Slotted Tip
24805	3/16" Slotted Tip
24807	1/4" Slotted Tip
24809	#0 Phillips® Tip
24811	#1 Phillips® Tip
24813	#2 Phillips® Tip
24815	#3 Phillips® Tip

3/8" Drive Shallow 6-Point Sockets, SAE

Product Code	Size (Inches)
31108	1/4
31110	5/16
31112	3/8
31114	7/16
31116	1/2
31118	9/16
31120	5/8
31122	11/16
31124	3/4
31126	13/16
31128	7/8
31130	15/16
31132	1

3/8" Drive Shallow 6-Point Sockets, Metric

Product Code	Size (MM)
31506	6
31507	7
31508	8
31509	9
31510	10
31511	11
31512	12
31513	13
31514	14
31515	15
31516	16
31517	17
31518	18
31519	19

1/4" Hex Screwdriver Bits

Product Code	Description / Size
24819	#1 Square Tip
24821	#2 Square Tip
24911	1/8" Hex Tip
24915	5/32" Hex Tip
24919	7/32" Hex Tip
24921	1/4" Hex Tip

50615

Features

- All tools are professional quality, made of high-grade chrome vanadium steel.
- Sockets feature SUPERTORQUE® lobular openings for greater turning power without deforming the fastener.
- Packed in rugged high-density polyethylene (HDPE) cases that are strong and durable yet light in weight.
- Case is shock proof at both high and low temperatures, equipped with heavy-duty metal latches and hinges.
- Two-component handles are easy to grip and comfortable to carry.

50613

WILLIAMS

35 PIECE 3/8" DRIVE BASIC TOOL SET

6 Point Rugged-Case-System Tool Set, Metric, with 1/4" Hex Screwdriver Bits

Product Code	Description
50613	35 Piece Basic Tool Set, Metric

Contents Include:

1/4" Drive Tools:

Product Code	Description
30006	Spinner Handle
30007	Universal Joint
30013	1/4" Hex Bit Holder

3/8" Drive Tools:

Product Code	Description
31001	7 3/4" Ratchet
31002	3" Extension
31003	6" Extension
31006	Universal Joint
31013	1/4" Hex Bit Holder

3/8" Drive Shallow 6-Point Sockets

Product Code	Size (MM)
31506	6
31507	7
31508	8
31509	9
31510	10
31511	11
31512	12
31513	13
31514	14
31515	15
31516	16
31517	17
31518	18
31519	19

1/4" Hex Screwdriver Bits

Product Code	Description / Size
24803	5/32" Slotted Tip
24805	3/16" Slotted Tip
24807	1/4" Slotted Tip
24809	#0 Phillips® Tip
24811	#1 Phillips® Tip
24813	#2 Phillips® Tip
24815	#3 Phillips® Tip

1/4" Hex Screwdriver Bits

Product Code	Description / Size
24819	#1 Square Tip
24821	#2 Square Tip
24911	1/8" Hex Tip
24915	5/32" Hex Tip
24919	7/32" Hex Tip
24921	1/4" Hex Tip

Features

- All tools are professional quality, made of high-grade chrome vanadium steel.
- Sockets feature SUPERTORQUE® lobular openings for greater turning power without deforming the fastener.
- Packed in rugged high-density polyethylene (HDPE) cases that are strong and durable yet light in weight.
- Case is shock proof at both high and low temperatures, equipped with heavy-duty metal latches and hinges.
- Two-component handles are easy to grip and comfortable to carry.

WILLIAMS®

34 PIECE 3/8" DRIVE BASIC TOOL SET

6 Point Rugged-Case-System Tool Set, SAE, with 1/4" Hex Screwdriver Bits

Product Code	Description
50603	34 Piece Basic Tool Set, SAE

50603

Contents Include:

1/4" Drive Tools:

Product Code	Description
30006	Spinner Handle
30007	Universal Joint
30013	1/4" Hex Bit Holder

3/8" Drive Tools:

Product Code	Description
31001	7 3/4" Ratchet
31002	3" Extension
31003	6" Extension
31006	Universal Joint
31013	1/4" Hex Bit Holder

3/8" Drive Shallow 6-Point Sockets

Product Code	Size (Inches)
31108	1/4
31110	5/16
31112	3/8
31114	7/16
31116	1/2
31118	9/16
31120	5/8
31122	11/16
31124	3/4
31126	13/16
31128	7/8
31130	15/16
31132	1

1/4" Hex Screwdriver Bits

Product Code	Description / Size
24803	5/32" Slotted Tip
24805	3/16" Slotted Tip
24807	1/4" Slotted Tip
24809	#0 Phillips® Tip
24811	#1 Phillips® Tip
24813	#2 Phillips® Tip
24815	#3 Phillips® Tip

1/4" Hex Screwdriver Bits

Product Code	Description / Size
24819	#1 Square Tip
24821	#2 Square Tip
24911	1/8" Hex Tip
24915	5/32" Hex Tip
24919	7/32" Hex Tip
24921	1/4" Hex Tip

Features

- All tools are professional quality, made of high-grade chrome vanadium steel.
- Sockets feature SUPERTORQUE® lobular openings for greater turning power without deforming the fastener.
- Packed in rugged high-density polyethylene (HDPE) cases that are strong and durable yet light in weight.
- Case is shock proof at both high and low temperatures, equipped with heavy-duty metal latches and hinges.
- Two-component handles are easy to grip and comfortable to carry.

WILLIAMS®

22 PIECE 3/8" DRIVE BOLT THRU SOCKET SET

6 Point Compact Case Tool Set, SAE & MM

Product Code	Description
50671	22 Piece 3/8" Drive Bolt Thru Socket Set

50671

Contents Include:

3/8" Drive Tools:

Product Code	Description
31018	Locking Flexible Ratchet
31019	3" Extension
31020	Adaptor

3/8" Drive Shallow 6 Point Sockets:

Product Code	Size (Inches)
31612	3/8
31614	7/16
31616	1/2
31618	9/16
31620	5/8
31622	11/16
31624	3/4

3/8" Drive Shallow 6-Point Sockets

Product Code	Size (mm)
31708	8
31709	9
31710	10
31711	11
31712	12
31713	13
31714	14
31715	15
31716	16
31717	17
31718	18
31719	19

Features

- All tools are professional quality, made of high-grade chrome vanadium steel
- Sockets feature SUPERTORQUE® lobular openings for greater turning power without deforming the fastener
- Packed in rugged compact high-density polyethylene (HDPE) cases that are strong and durable yet light in weight
- Ratchet with 7 locking positions and flex head design.

50664

WILLIAMS®

18 PIECE 3/8" DRIVE SOCKET AND DRIVE TOOL SET

6 & 12 Point Compact Case Tool Set, SAE

Product Code	Description
50664	18 Piece 3/8" Drive Socket and Drive Tool Set

Contents Include:

3/8" Drive Tools:

Product Code	Description
31001	7 3/4" Pear Head Ratchet
31002	3" Extension
31003	6" Extension

3/8" Drive Shallow 6 Point Sockets:

Product Code	Size (Inches)
31112	3/8
31114	7/16
31116	1/2
31118	9/16
31120	5/8
31122	11/16
31124	3/4

3/8" Drive Deep 12 Point Sockets:

Product Code	Size (Inches)
31412	3/8
31414	7/16
31416	1/2
31418	9/16
31420	5/8
31422	11/16
31424	3/4

3/8" Drive Spark Plug Socket:

Product Code	Size (Inches)
31301	5/8

Features

- All tools are professional quality, made of high-grade chrome vanadium steel
- Sockets feature SUPERTORQUE® lobular openings for greater turning power without deforming the fastener
- Packed in rugged compact high-density polyethylene (HDPE) cases that are strong and durable yet light in weight

50666

WILLIAMS®

47 PIECE 3/8" DRIVE SOCKET AND DRIVE TOOL SET

6 & 12 Point Compact Case Tool Set, SAE & Metric

Product Code	Description
50666	47 Piece 3/8" Drive Socket and Drive Tool Set

Contents Include:

3/84" Drive Tools:

Product Code	Description
30001	5 1/4" Pear Head Ratchet
30002	3" Extension
30003	1 1/2" Extension
30006	Spinner Handle

3/8" Drive Shallow 6 Point Sockets:

Product Code	Size (Inches)
31110	5/16
31112	3/8
31114	7/16
31116	1/2
31118	9/16
31120	5/8
31122	11/16
31124	3/4

3/8" Drive Shallow 6 Point Sockets:

Product Code	Size (Metric)
31506	6
31507	7
31508	8
31509	9
31510	10
31511	11
31512	12
31513	13
31514	14
31515	15
31516	16
31517	17
31518	18
31519	19

3/8" Drive Deep 6 Point Sockets:

Product Code	Size (SAE)
31410	5/16
31412	3/8
31414	7/16
31416	1/2
31418	9/16
31420	5/8
31422	11/16
31424	3/4

3/8" Drive Deep 6 Point Sockets:

Product Code	Size (Metric)
31807	7
31808	8
31809	9
31810	10
31811	11
31812	12
31813	13
31814	14
31815	15
31816	16
31817	17
31818	18
31819	19

Features

- All tools are professional quality, made of high-grade chrome vanadium steel
- Sockets feature SUPERTORQUE® lobular openings for greater turning power without deforming the fastener
- Packed in rugged compact high-density polyethylene (HDPE) cases that are strong and durable yet light in weight

WILLIAMS®

15 PIECE 3/8" DRIVE SOCKET AND DRIVE TOOL SET

12 Point Compact Case Tool Set, SAE

Product Code	Description
50673	15 Piece 3/8" Drive Socket and Drive Tool Set

Contents Include:

3/8" Drive Tools:

Product Code	Description
31001	7 3/4" Pear Head Ratchet
31002	3" Extension
31003	6" Extension
31006	Universal Joint

3/8" Drive Shallow 12 Point Sockets:

Product Code	Size (Inches)	Product Code	Size (Inches)	Product Code	Size (Inches)
31208	1/4	31216	1/2	31224	3/4
31210	5/16	31218	9/16	31226	13/16
31212	3/8	31220	5/8	31228	7/8
31214	7/16	31222	11/16		

Features
- All tools are professional quality, made of high-grade chrome vanadium steel
- Sockets feature SUPERTORQUE® lobular openings for greater turning power without deforming the fastener
- Packed in rugged compact high-density polyethylene (HDPE) cases that are strong and durable yet light in weight

50673

WILLIAMS®

15 PIECE 3/8" DRIVE SOCKET AND DRIVE TOOL SET

6 Point Compact Case Tool Set, SAE

Product Code	Description
50663	15 Piece 3/8" Drive Socket and Drive Tool Set

Contents Include:

3/8" Drive Tools:

Product Code	Description
31001	7 3/4" Pear Head Ratchet
31002	3" Extension
31003	6" Extension
31006	Universal Joint

3/8" Drive Shallow 12 Point Sockets:

Product Code	Size (Inches)	Product Code	Size (Inches)	Product Code	Size (Inches)
31108	1/4	31116	1/2	31124	3/4
31110	5/16	31118	9/16	31126	13/16
31112	3/8	31120	5/8	31128	7/8
31114	7/16	31122	11/16		

Features
- All tools are professional quality, made of high-grade chrome vanadium steel
- Sockets feature SUPERTORQUE® lobular openings for greater turning power without deforming the fastener
- Packed in rugged compact high-density polyethylene (HDPE) cases that are strong and durable yet light in weight

50663

WILLIAMS®

15 PIECE 3/8" DRIVE SOCKET AND DRIVE TOOL SET

6 Point Compact Case Tool Set, Metric

Product Code	Description
50665	16 Piece 3/8" Drive Socket and Drive Tool Set

Contents Include:

3/8" Drive Tools:

Product Code	Description
31001	7 3/4" Pear Head Ratchet
31002	3" Extension
31003	6" Extension
31006	Universal Joint

3/8" Drive Shallow 12 Point Sockets:

Product Code	Size (mm)	Product Code	Size (mm)	Product Code	Size (mm)
31508	8	31512	12	31516	16
31509	9	31513	13	31517	17
31510	10	31514	14	31518	18
31511	11	31515	15	31519	19

Features
- All tools are professional quality, made of high-grade chrome vanadium steel
- Sockets feature SUPERTORQUE® lobular openings for greater turning power without deforming the fastener
- Packed in rugged compact high-density polyethylene (HDPE) cases that are strong and durable yet light in weight

50665

WILLIAMS®

4 PIECE RATCHETING ADAPTOR SET

Product Code	Description
WS-4RWA	4 Piece Ratcheting Adaptor Set

Contents Include:

Description	Description
1/4" Drive male Adaptor	3/8" Drive Male Adaptor
1/4" Hex Shank Coupler	1/2" Drive Male Adaptor

Features
- Converts a ratcheting wrench into a ratchet.
- To be used with Ratcheting Combination Wrenches
- Allows the use of hex bits, 1/4", 3/8", 1/2" Drive Sockets
- Adaptor locks into the wrench by twisting the top cap.
- Push-button socket release

WS-4RWA

ergo BAHCO

3/8" DRIVE ERGO® ONE-HAND REVERSING RATCHET

Quick-Release, Narrow Head Design

Product Code	Description	Length (Inches)	Number of Teeth
7755-3/8	One-Hand ergo® Ratchet	9 3/32	72

Features

- Ergonomic, smooth, non-slip handle ensures maximum comfort in the hand.
- Ring switch provides easy, one handed change of direction.
- Easy access reverse lever allows user to change working direction quickly and easily with only one hand.
- Built-in ratchet spinner disc for fast socket turn-down.
- 72 tooth gear with 5° engagement allows engagement in tight working areas.
- Nickel/Chrome plating provides increase protection from rust and corrosion.
- Durable handle material withstands aggressive fluids and oils.

7755-3/8

B-52EHA

B-52EHLA

B-52EHF

BB-52EHA

7750

B-52A

BB52A

B-53A

WILLIAMS BAHCO

3/8" DRIVE ENCLOSED HEAD RATCHETS

Williams® Sealed Narrow Head Design, Chrome and Black Industrial Finish

Product Code	Description	Length (Inches)	Number of Teeth
B-52EHA	Chrome Finish Enclosed Head Ratchet	8	36
B-52EHLA	Chrome Finish Enclosed Head Ratchet, Long	10 3/4	36
B-52EHFA	Chrome Finish Flex Head Ratchet	9 11/16	36
BB-52EHA	Black Industrial Finish Enclosed Head Ratchet	8	36
B-52EHRK	Repair Kit "EH" Model Enclosed Head Ratchets		
B-52EHRKA	Repair Kit "EHA" Model Enclosed Head Ratchets		

Fed. Spec: ANSI B107.10M

Made in U.S.A.

BAHCO® Fine-Tooth Bi-Mold Comfort Grip Handle

Product Code	Description	Length (Inches)	Number of Teeth
7750	Comfort Grip Enclosed Head Ratchet	8	80

Features

- Enclosed head is sealed to prevent dust, dirt, and liquids from entering head, preserving internal lubrication.
- Forged one-piece ratchet provide strength and safety for industrial applications.
- Smooth comfort-grip handle permits all-day use without gloves.
- 36 tooth gear with 10 degree of engagement allows engagement in tight working areas.
- Nickel/Chrome plating provides increase protection from rust and corrosion.
- Chrome finish models feature mirror-like exterior that can be easily cleaned after each use.
- Single Pawl ratchet design:
- 1) Designed for tighter tolerances between pawl and gear which reduces metal fatigue and slippage under load.
- 2) Does not require as many working parts, reducing possible breakage and parts to repair.
- Easy access reverse lever allows user to change working direction quickly and easily with only one hand.

WILLIAMS

3/8" DRIVE ROUND HEAD RATCHETS

Knurled Handle, Chrome and Black Industrial Finish

Product Code	Description	Length (Inches)	Number of Teeth
B-52A	Chrome Finish Round Head Ratchet	7 5/8	72
B-53A	Chrome Finish Round Head Ratchet, Long	10 1/2	72
BB-52A	Black Industrial Finish Round Head Ratchet	7 5/8	72
B-52ARK	Repair Kit for Round Head Ratchets		

Fed. Spec: ANSI B107.10M

Made in U.S.A.

Features

- Double pawl design with 72 teeth action provides a 5° ratcheting angle.
- Shift lever reverses action instantly.
- Knurled handle provides a non-slip grip.
- Chrome finish models provides increased protection from rust and corrosion.

WILLIAMS®

3/8" DRIVE HANDLES

Knurled Handle, High-Polished Chrome Finish

Product Code	Description	Length (Inches)
B-40A	Flex Handle	8 9/16
B-20A	Sliding T-Handle	7 15/16
B-15	Speeder Handle	18

Fed. Spec: ANSI B107.10M

Made in U.S.A.

Features

- Chrome plating provides increased protection from rust and corrosion.
- Drive handles provide extra leverage with greater strength than ratchets.
- Speeder handle is ideal for fast turn down of fasteners.

WILLIAMS®

3/8" DRIVE EXTENSIONS AND ACCESSORIES

High-Polished Chrome Finish

Product Code	Description	Length (Inches)
B-101	Extension	1 1/2
B-108	Extension	3
B-110	Extension	6
B-115	Extension	11
B-118	Extension	18
BFE-8	Flexible Extension	8
B-140A	Universal Joint	2
B-70	Ratchet Spinner Disk	1 1/4

Fed. Spec: ANSI B107.10M

WSB-5XT 5 Piece Extension Set in Roll Pouch – 049605

Contents Include:

Product Code	Size (Inches)	Product Code	Size (Inches)
B-101	1 1/2	B-115	11
B-108	3	B-118	18
B-110	6		

Made in U.S.A.

Features

- Chrome plating provides increased protection from rust and corrosion.
- Flexible extension is designed for low torque applications in limited access areas.
- Ball and spring socket retention.
- Spinner disk is ideal for fast turn down of fasteners.

WILLIAMS®

3/8" DRIVE ADAPTORS

High-Polished Chrome and Black Industrial Finish

Product Code	Length (Inches)	Male End (Inches)	Female End (Inches)
Chrome Finish			
BS-130	1 5/16	1/2	3/8
Black Industrial Finish			
BS-130B	1 5/16	1/2	3/8
BS-131BA	1 5/16	3/8	1/2

Fed. Spec: ANSI B107.10M

Made in U.S.A.

Features

- Ball and spring socket retention.

31016

31011

11920

31001

31007

31005

WILLIAMS®

3/8" DRIVE RATCHETS AND HANDLES

High-Polished Chrome Finish

Product Code	Description	Length (Inches)
31001	38 Tooth Quick-Release Ratchet	7 3/4
31011	Ultra-Fine 60-Tooth Ratchet	7 3/4
31005	Flex Handle	10
11920	Flex Handle, Comb. 3/8" x 1/2" Drive	10
31007	Sliding T-Handle	7 3/4
31016	3/8" Drive Spinner Handle	9

Fed. Spec: ANSI B107.10M

Features

- Ball and spring socket retention.
- Williams 3/8" Drive Ratchets Feature:
  - Ultra-fine 60 tooth model offers 6° tooth action in a narrow pear head.
  - Unique Finger-Fit handles to provide a comfortable, non-slip grip and extra turning power.
  - Choice of 38-tooth quick-release or 60-tooth ultra-fine gear.
  - Narrow pear-shaped heads for access into confined work areas.
  - High-polished chrome finish for easy cleaning.
- Spinner handle features bi-mold comfort-grip handle.
- Unique combination 3/8" X 1/2" drive flex handle offers convenience of both drive sizes on one handle.

31013

31006

31008

31009

31002

31003

31004

WILLIAMS®

3/8" DRIVE EXTENSIONS AND ACCESSORIES

High-Polished Chrome Finish

Product Code	Description	Length (Inches)
31002	Extension	3
31003	Extension	6
31004	Extension	10
31006	Universal Joint	2
31008	Adaptor, 3/8" F x 1/4" M	1
31009	Adaptor, 3/8" F x 1/2" M	1 1/4
31013	Holder for 1/4" Hex Screwdriver Bits	3/4

Fed. Spec: ANSI B107.10M

Features

- Chrome plating provides increased protection from rust and corrosion.
- Ball and spring socket retention.

31920

WILLIAMS®

6 PIECE 3/8" DRIVE RATCHET AND DRIVE TOOL SET

Furnished in a Vinyl Pouch – 50003

Product Code	Description
31920	6 Piece 3/8" Drive Ratchet and Accessory Set

Contents Include:

Product Code	Description	Product Code	Description
31001	38 Tooth Quick-Release Ratchet	31005	10" Flex Handle Breaker Bar
31002	3" Extension	31006	Universal Joint
31004	10" Extension	31007	7 3/4" Sliding T-Handle

Features

- All tools are professional quality, made of high-grade chrome vanadium steel.
- Sockets feature SUPERTORQUE® lobular openings for greater turning power without deforming the fastener.

WILLIAMS

3/8" DRIVE SHALLOW 12 POINT SOCKETS, SAE

High-Polished Chrome Finish

		A	B	C	D	E		F
Product Code	Size (Inches)	OAL (Inches)	Drive End Diameter (Inches)	Working End Diameter (Inches)	Broach Depth (Inches)	Bolt Clearance Depth (Inches)	Bolt Clearance Diameter (Inches)	Nose Length (Inches)
B-1208	1/4	1 1/32	11/16	13/32	7/32	9/16	7/32	17/32
B-1210	5/16	1 1/32	11/16	7/16	1/4	9/16	17/64	17/32
B-1211	11/32	1 1/32	11/16	1/2	9/32	9/16	21/64	17/32
B-1212	3/8	1 1/32	11/16	9/16	9/32	9/16	11/32	17/32
B-1214	7/16	1 1/32	11/16	5/8	5/16	9/16	11/32	17/32
B-1216	1/2	1 1/32	23/32	23/32	11/32	3/8	3/8	-
B-1217	17/32	1 1/32	25/32	25/32	13/32	3/4	1/2	-
B-1218	9/16	1 3/32	25/32	25/32	9/16	19/32	17/32	-
B-1219	19/32	1 3/32	25/32	25/32	9/16	9/16	9/16	-
B-1220	5/8	1 1/8	27/32	27/32	19/32	5/8	19/32	-
B-1222	11/16	1 5/32	15/16	15/16	5/8	5/8	11/16	-
B-1224	3/4	1 3/16	1	1	11/16	11/16	23/32	-
B-1226	13/16	1 1/4	1 1/16	1 1/16	11/16	11/16	25/32	-
B-1228	7/8	1 9/32	1 5/32	1 5/32	25/32	25/32	7/8	-
B-1230	15/16	1 3/8	1 1/4	1 1/4	13/16	27/32	29/32	-
B-1232	1	1 13/32	1 5/16	1 5/16	27/32	7/8	1	-

Fed. Spec: ANSI B107.1

WSB-10RC 10 Piece 3/8" Drive Shallow 12-Point Socket Set on Clip Rail

Contents Include:

Product Code	Size (Inches)	Product Code	Size (Inches)	Product Code	Size (Inches)
B-1210	5/16	B-1218	9/16	B-1226	13/16
B-1212	3/8	B-1220	5/8	B-1228	7/8
B-1214	7/16	B-1222	11/16		
B-1216	1/2	B-1224	3/4		

WSB-13RC 13 Piece 3/8" Drive Shallow 12-Point Socket Set on Clip Rail

Contents Include:

Product Code	Size (Inches)	Product Code	Size (Inches)	Product Code	Size (Inches)
B-1208	1/4	B-1218	9/16	B-1228	7/8
B-1210	5/16	B-1220	5/8	B-1230	15/16
B-1212	3/8	B-1222	11/16	B-1232	1
B-1214	7/16	B-1224	3/4		
B-1216	1/2	B-1226	13/16		

Made in U.S.A.

Features

- SUPERTORQUE® lobular openings for greater turning power without deforming the fastener.
- Designed for quick engagement on both 6 and 12 point fasteners.

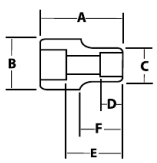

WSB-10RC

WSB-13RC

WILLIAMS®

3/8" DRIVE SHALLOW SOCKETS, 6 POINT, SAE

High-Polished Chrome Finish

Product Code	Size (Inches)	A OAL (Inches)	B Drive End Diameter (Inches)	C Working End Diameter (Inches)	D Broach Depth (Inches)	E Bolt Clearance Depth (Inches)	F Nose Length (Inches)
B-608	1/4	1 1/32	11/16	13/32	7/32	9/16	1/2
B-610	5/16	1 1/32	11/16	7/16	1/4	9/16	1/2
B-611	11/32	1 1/32	11/16	1/2	9/32	9/16	1/2
B-612	3/8	1 1/32	11/16	9/16	9/32	9/16	1/2
B-614	7/16	1 1/32	11/16	5/8	5/16	9/16	1/2
B-616	1/2	1 1/32	23/32	23/32	11/32	9/16	-
B-618	9/16	1 3/32	25/32	25/32	9/16	19/32	-
B-620	5/8	1 1/8	27/32	27/32	19/32	5/8	-
B-622	11/16	1 5/32	15/16	15/16	5/8	5/8	-
B-624	3/4	1 3/16	1	1	21/32	11/16	-
B-626	13/16	1 1/4	1 1/16	1 1/16	11/16	23/32	-
B-628	7/8	1 9/32	1 5/32	1 5/32	3/4	25/32	-
B-630	15/16	1 3/8	1 1/4	1 1/4	13/16	27/32	-
B-632	1	1 13/32	1 5/16	1 5/16	27/32	7/8	-

Fed. Spec: ANSI B107.1

WSB-10HRC 10 Piece 3/8" Drive Shallow 6 Point Socket Set on Clip Rail

Contents Include:

Product Code	Size (Inches)	Product Code	Size (Inches)	Product Code	Size (Inches)
B-610	5/16	B-618	9/16	B-626	13/16
B-612	3/8	B-620	5/8	B-628	7/8
B-614	7/16	B-622	11/16		
B-616	1/2	B-624	3/4		

WSB-13HRC 13 Piece 3/8" Drive Shallow 6 Point Socket Set on Clip Rail

Contents Include:

Product Code	Size (Inches)	Product Code	Size (Inches)	Product Code	Size (Inches)
B-608	1/4	B-618	9/16	B-628	7/8
B-610	5/16	B-620	5/8	B-630	15/16
B-612	3/8	B-622	11/16	B-632	1
B-614	7/16	B-624	3/4		
B-616	1/2	B-626	13/16		

Made in U.S.A.

Features

- SUPERTORQUE® lobular openings for greater turning power without deforming the fastener.
- Designed for maximum engagement on 6 point fasteners.

WSB-10HRC

WSB-13HRC

WILLIAMS®

3/8" DRIVE SHALLOW SOCKETS, 12 POINT, SAE

High-Polished Chrome Finish

Product Code	Size (Inches)	A OAL (Inches)	B Drive End Diameter (Inches)	C Working End Diameter (Inches)	D Broach Depth (Inches)	E Bolt Clearance Depth (Inches)	E Bolt Clearance Diameter (Inches)	F Nose Length (Inches)
31208	1/4	1	11/16	7/16	11/32	9/16	7/32	17/32
31210	5/16	1	11/16	15/32	3/8	17/32	1/4	17/32
31212	3/8	1	11/16	9/16	3/8	1/2	9/32	17/32
31214	7/16	1	11/16	5/8	11/32	17/32	13/32	17/32
31216	1/2	1	3/4	3/4	13/32	19/32	7/16	-
31218	9/16	1 1/16	25/32	25/32	17/32	5/8	17/32	-
31220	5/8	1 1/16	7/8	7/8	19/32	11/16	19/32	-
31222	11/16	1 1/16	15/16	15/16	1/2	11/16	21/32	-
31224	3/4	1 1/8	1	1	9/16	23/32	23/32	-
31226	13/16	1 1/8	1 1/8	1 1/8	9/16	23/32	25/32	-
31228	7/8	1 7/32	1 3/16	1 3/16	21/32	13/16	27/32	-
31230	15/16	1 7/32	1 1/4	1 1/4	21/32	13/16	27/32	-
31232	1	1 7/32	1 5/16	1 5/16	11/16	13/16	31/32	-

Fed. Spec: ANSI B107.1

31923 9 Piece 3/8" Drive Shallow 12 Point Socket Set on Clip Rail
Contents Include:

Product Code	Size (Inches)	Product Code	Size (Inches)	Product Code	Size (Inches)
31208	1/4	31214	7/16	31220	5/8
31210	5/16	31216	1/2	31222	11/16
31212	3/8	31218	9/16	31224	3/4

31925 13 Piece 3/8" Drive Shallow 12 Point Socket Set on Clip Rail
Contents Include:

Product Code	Size (Inches)	Product Code	Size (Inches)	Product Code	Size (Inches)
31208	1/4	31218	9/16	31228	7/8
31210	5/16	31220	5/8	31230	15/16
31212	3/8	31222	11/16	31232	1
31214	7/16	31224	3/4		
31216	1/2	31226	13/16		

31216 31208

31923

31925

Features
- SUPERTORQUE® lobular openings for greater turning power without deforming the fastener.
- Designed for maximum engagement on 12 point fasteners.

WILLIAMS®

3/8" DRIVE SHALLOW SOCKETS, 6 POINT, SAE

High-Polished Chrome Finish

Product Code	Size (Inches)	A OAL (Inches)	B Drive End Diameter (Inches)	C Working End Diameter (Inches)	D Broach Depth (Inches)	E Bolt Clearance Depth (Inches)	E Bolt Clearance Diameter (Inches)	F Nose Length (Inches)
31108	1/4	1	11/16	7/16	11/32	9/16	7/32	17/32
31110	5/16	1	11/16	15/32	3/8	17/32	1/4	17/32
31112	3/8	1	11/16	9/16	3/8	1/2	9/32	17/32
31114	7/16	1	11/16	5/8	11/32	17/32	13/32	17/32
31116	1/2	1	3/4	3/4	13/32	19/32	7/16	-
31118	9/16	1 1/16	25/32	25/32	17/32	5/8	17/32	-
31120	5/8	1 1/16	7/8	7/8	19/32	11/16	19/32	-
31122	11/16	1 1/16	15/16	15/16	1/2	11/16	21/32	-
31124	3/4	1 1/8	1	1	9/16	23/32	23/32	-
31126	13/16	1 1/8	1 1/8	1 1/8	9/16	23/32	25/32	-
31128	7/8	1 7/32	1 3/16	1 3/16	21/32	13/16	27/32	-
31130	15/16	1 7/32	1 1/4	1 1/4	21/32	13/16	27/32	-
31132	1	1 7/32	1 5/16	1 5/16	11/16	13/16	31/32	-

Fed. Spec: ANSI B107.1

31922 9 Piece 3/8" Drive Shallow 6 Point Socket Set on Clip Rail
Contents Include:

Product Code	Size (Inches)	Product Code	Size (Inches)	Product Code	Size (Inches)
31108	1/4	31114	7/16	31120	5/8
31110	5/16	31116	1/2	31122	11/16
31112	3/8	31118	9/16	31124	3/4

31924 13 Piece 3/8" Drive Shallow 6 Point Socket Set on Clip Rail
Contents Include:

Product Code	Size (Inches)	Product Code	Size (Inches)	Product Code	Size (Inches)
31108	1/4	31118	9/16	31128	7/8
31110	5/16	31120	5/8	31130	15/16
31112	3/8	31122	11/16	31132	1
31114	7/16	31124	3/4		
31116	1/2	31126	13/16		

31116 31108

31922

31924

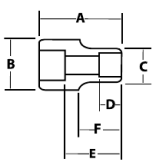

Features
- SUPERTORQUE® lobular openings for greater turning power without deforming the fastener.
- Designed for maximum engagement on 6 point fasteners.

BD-814

WSBD-7RC

BB-526

BU-1220, BU-1212

WSB-7U

WILLIAMS®

3/8" DRIVE SHALLOW SOCKETS, 4 & 8 POINT, SAE

High-Polished Chrome Finish

Product Code	Size (Inches)	A OAL (Inches)	B Drive End Diameter (Inches)	C Working End Diameter (Inches)	D Broach Depth (Inches)	E Bolt Clearance Depth (Inches)	Bolt Clearance Diameter (Inches)	F Nose Length (Inches)
BD-808	1/4	29/32	21/32	15/32	7/32	13/32	5/32	7/16
B-409 **	9/32	1 1/32	11/16	9/16	5/16	17/32	3/16	1/2
BD-810	5/16	29/32	21/32	9/16	1/4	13/32	1/4	7/16
BD-812	3/8	15/16	11/16	41/64	9/32	7/16	5/16	15/32
BD-814	7/16	1	23/32	23/32	9/32	1/2	5/16	-
BD-816	1/2	1	29/32	29/32	5/16	1/2	13/32	-
BD-818	9/16	1 1/8	1	1	13/32	5/8	17/32	-
BD-820	5/8	1 1/8	1 1/16	1 1/16	7/16	5/8	19/32	-

** 4 Point Socket
Fed. Spec: ANSI B107.1

WSBD-7RC 7 Piece 8 Point Socket Set on Clip Rail

Contents Include:

Product Code	Size (Inches)	Product Code	Size (Inches)	Product Code	Size (Inches)
BD-808	1/4	BD-814	7/16	BD-820	5/8
BD-810	5/16	BD-816	1/2		
BD-812	3/8	BD-818	9/16		

Features

- SUPERTORQUE® lobular openings for greater turning power without deforming the fastener.
- 8 point sockets are designed for quick engagement on 4 point fasteners.

Made in U.S.A.

WILLIAMS®

3/8" DRIVE 5 POINT PENTA-SOCKET

Black Industrial Finish

Product Code	Size (Inches)	A OAL (Inches)	B Drive End Diameter (Inches)	C Working End Diameter (Inches)	D Broach Depth (Inches)	E Bolt Clearance Depth (Inches)	Bolt Clearance Diameter (Inches)	F Nose Length (Inches)
BB-526	51/64	1 1/16	1 1/8	1 1/8	7/16	1/2	23/32	-

Features

- 5 point Penta-Socket services 5 point nuts found on tamper-resistant Buffalo covers used by gas, electric, and some water companies to protect shutoff gates.

Made in U.S.A.

WILLIAMS®

3/8" DRIVE UNIVERSAL SOCKETS, 12 POINT, SAE

High-Polished Chrome Finish

Product Code	Size (Inches)	A OAL (Inches)	B Drive End Diameter (Inches)	C Open End Diameter (Inches)	D Broach Depth (Inches)	E Bolt Clearance Depth (Inches)	Bolt Clearance Diameter (Inches)	F Nose Length (Inches)
BU-1212	3/8	1 25/32	3/4	1/2	1/4	1/2	5/16	15/64
BU-1214	7/16	1 25/32	3/4	5/8	1/4	1/2	11/32	15/64
BU-1216	1/2	1 25/32	3/4	11/16	5/16	9/16	11/32	9/32
BU-1218	9/16	1 25/32	3/4	3/4	11/32	5/8	11/32	17/32
BU-1220	5/8	1 25/32	3/4	7/8	13/32	11/16	11/32	17/32
BU-1222	11/16	2	3/4	15/16	7/16	23/32	11/32	17/32
BU-1224	3/4	2 1/8	3/4	1	17/32	13/16	11/32	5/8

Fed. Spec: ANSI B107.1

Made in U.S.A.

WSB-7U 7 Piece 12 Point Universal Socket Set on Clip Rail

Contents Include:

Product Code	Size (Inches)	Product Code	Size (Inches)	Product Code	Size (Inches)
BU-1212	3/8	BU-1218	9/16	BU-1224	3/4
BU-1214	7/16	BU-1220	5/8		
BU-1216	1/2	BU-1222	11/16		

Features

- Ideal for work in confined areas where fastener is inaccessible to standard sockets.

WILLIAMS

3/8" DRIVE UNIVERSAL SOCKETS, 6 POINT, SAE

High-Polished Chrome Finish

Product Code	Size (Inches)	A OAL (Inches)	B Drive End Diameter (Inches)	C Open End Diameter (Inches)	D Broach Depth (Inches)	E Bolt Clearance Depth (Inches)	E Bolt Clearance Diameter (Inches)	F Nose Length (Inches)
31142	3/8	1 53/64	3/4	9/16	3/8	35/64	21/64	5/16
31144	7/16	1 53/64	3/4	5/8	3/8	35/64	21/64	5/16
31146	1/2	1 57/64	3/4	45/64	13/32	37/64	21/64	13/32
31148	9/16	1 57/64	3/4	25/32	7/16	43/64	21/64	33/64
31150	5/8	2	3/4	55/64	7/16	45/64	21/64	33/64
31152	11/16	2 3/64	3/4	15/16	31/64	3/4	21/64	17/32
31154	3/4	2 3/64	3/4	1 1/64	1/2	51/64	21/64	17/32

Fed. Spec: ANSI B107.1

31154 31142

31938 7 Piece 6 Point Universal socket Set on Clip Rail

Contents Include:

Product Code	Size (Inches)	Product Code	Size (Inches)	Product Code	Size (Inches)
31142	3/8	31148	9/16	31154	3/4
31144	7/16	31150	5/8		
31146	1/2	31152	11/16		

31938

Features

- Ideal for work in confined areas where fastener is inaccessible to standard sockets

WILLIAMS

3/8" DRIVE UNIVERSAL SOCKETS, 6 POINT, MM

High-Polished Chrome Finish

Product Code	Size (mm)	A OAL (Inches)	B Drive End Diameter (Inches)	C Open End Diameter (Inches)	D Broach Depth (Inches)	E Bolt Clearance Depth (Inches)	E Bolt Clearance Diameter (Inches)	F Nose Length (Inches)
31528	8	1 27/32	3/4	15/32	23/64	35/64	15/64	21/64
31530	10	1 55/64	3/4	9/16	23/64	35/64	21/64	21/64
31531	11	1 55/64	3/4	5/8	23/64	35/64	21/64	21/64
31532	12	1 55/64	3/4	43/64	23/64	35/64	21/64	21/64
31533	13	1 55/64	3/4	45/64	23/64	35/64	21/64	23/64
31534	14	1 15/16	3/4	49/64	25/64	39/64	21/64	1/2
31535	15	1 57/64	3/4	53/64	25/64	39/64	21/64	1/2
31536	16	2	3/4	55/64	7/16	45/64	21/64	1/2
31537	17	2	3/4	15/16	7/16	45/64	21/64	1/2
31538	18	2 1/64	3/4	15/16	15/32	3/4	21/64	1/2
31539	19	2 3/64	3/4	1	1/2	49/64	21/64	1/2

Fed. Spec: ANSI B107.1

31539 31528

31939 11 Piece 6 Point Universal Socket Set on Clip Rail

Contents Include:

Product Code	Size (mm)	Product Code	Size (mm)	Product Code	Size (mm)
31528	8	31533	13	31537	17
31530	10	31534	14	31538	18
31531	11	31535	15	31539	19
31532	12	31536	16		

31939

Features

- Ideal for work in confined areas where fastener is inaccessible to standard sockets

BCF-26

BCF-32

WILLIAMS®

3/8" DRIVE CROWFOOT WRENCH, FLARE NUT, 12 POINT

Satin Chrome Finish, SAE

Product Code	Size (Inches)	A Diameter of Head	B Thickness of Head	C Width of Slot	D Length of Centers
BCF20	5/8	15/16	11/16	15/32	47/64
BCF22	11/16	1 1/32	11/16	17/32	25/32
BCF24	3/4	1 1/8	23/32	9/16	53/64
BCF26	13/16	1 13/64	23/32	5/8	7/8
BCF28	7/8	1 19/64	3/4	11/16	15/16
BCF30	15/16	1 3/8	3/4	23/32	15/16
BCF32	1	1 29/64	25/32	3/4	1 1/64
BCF34	1 1/16	1 17/32	25/32	25/32	1 3/64

Fed. Spec: ASME B107.21 Type 1 Class 1

Features

- Satin chrome finish

BD-1216 BD-1208

WILLIAMS®

3/8" DRIVE DEEP SOCKETS, 12 POINT, SAE

High-Polished Chrome Finish

Product Code	Size (Inches)	A OAL (Inches)	B Drive End Diameter (Inches)	C Working End Diameter (Inches)	D Broach Depth (Inches)	E Bolt Clearance Depth (Inches)	Bolt Clearance Diameter (Inches)	F Nose Length (Inches)
BD-1208	1/4	2 1/8	11/16	13/32	7/32	1 11/16	7/32	1 5/8
BD-1210	5/16	2 1/8	11/16	15/32	1/4	1 11/16	5/16	1 5/8
BD-1212	3/8	2 1/8	11/16	9/16	9/32	1 11/16	3/8	1 5/8
BD-1214	7/16	2 1/8	11/16	5/8	9/32	1 11/16	7/16	1 5/8
BD-1216	1/2	2 1/8	23/32	23/32	11/32	1 11/32	15/32	-
BD-1218	9/16	2 3/8	25/32	25/32	9/16	1 9/16	17/32	-
BD-1220	5/8	2 3/8	27/32	27/32	19/32	1 9/16	19/32	-
BD-1222	11/16	2 5/8	15/16	15/16	5/8	1 11/16	21/32	-
BD-1224	3/4	2 5/8	1	1	21/32	1 11/16	23/32	-
BD-1226	13/16	2 3/4	1 1/16	1 1/16	11/16	2 1/32	25/32	-
BD-1228	7/8	2 3/4	1 5/32	1 5/32	3/4	2 1/32	27/32	-
BD-1230	15/16	2 3/4	1 1/4	1 1/4	13/16	2 1/32	27/32	-
BD-1232	1	2 3/4	1 5/16	1 5/16	27/32	2	31/32	-

Fed. Spec: ANSI B107.1

WSBD-9RC

WSBD-9RC 9 Piece 3/8" Drive Deep 12 Point Socket Set on Clip Rail

Contents Include:

Product Code	Size (Inches)	Product Code	Size (Inches)	Product Code	Size (Inches)
BD-1212	3/8	BD-1218	9/16	BD-1224	3/4
BD-1214	7/16	BD-1220	5/8	BD-1226	13/16
BD-1216	1/2	BD-1222	11/16	BD-1228	7/8

WSBD-13RC

WSBD-13RC 13 Piece 3/8" Drive Deep 12 Point Socket Set on Clip Rail

Contents Include:

Product Code	Size (Inches)	Product Code	Size (Inches)	Product Code	Size (Inches)
BD-1208	1/4	BD-1218	9/16	BD-1228	7/8
BD-1210	5/16	BD-1220	5/8	BD-1230	15/16
BD-1212	3/8	BD-1222	11/16	BD-1232	1
BD-1214	7/16	BD-1224	3/4		
BD-1216	1/2	BD-1226	13/16		

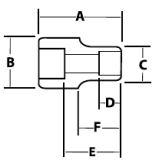

Made in U.S.A.

Features

- SUPERTORQUE® lobular openings for greater turning power without deforming the fastener.
- Designed for quick engagement on both 6 and 12 point fasteners.

WILLIAMS

3/8" DRIVE DEEP SOCKETS, 12 POINT, SAE

High-Polished Chrome Finish

Product Code	Size (Inches)	A OAL (Inches)	B Drive End Diameter (Inches)	C Working End Diameter (Inches)	D Broach Depth (Inches)	E Bolt Clearance Depth (Inches)	Bolt Clearance Diameter (Inches)	F Nose Length (Inches)
31408	1/4	2 1/2	11/16	7/16	11/32	1 11/16	7/32	1 5/8
31410	5/16	2 1/2	11/16	15/32	3/8	1 11/16	5/16	1 5/8
31412	3/8	2 1/2	11/16	9/16	3/8	1 11/16	3/8	1 5/8
31414	7/16	2 1/2	11/16	5/8	11/32	1 11/16	7/16	1 5/8
31416	1/2	2 1/2	3/4	3/4	13/32	1 11/32	15/32	-
31418	9/16	2 1/2	25/32	25/32	17/32	1 9/16	17/32	-
31420	5/8	2 1/2	7/8	7/8	19/32	1 9/16	19/32	-
31422	11/16	2 1/2	15/16	15/16	1/2	1 11/16	21/32	-
31424	3/4	2 1/2	1	1	9/16	1 11/16	23/32	-
31426	13/16	2 1/2	1 1/8	1 1/8	9/16	2 1/32	25/32	-
31428	7/8	2 1/2	1 3/16	1 3/16	21/32	2 1/32	27/32	-
31430	15/16	2 1/2	1 1/4	1 1/4	21/32	2 1/32	27/32	-
31432	1	2 1/2	1 5/16	1 5/16	11/16	2	31/32	-

Fed. Spec: ANSI B107.1

31416 31408

31926 9 Piece 3/8" Drive Deep 12 Point Socket Set on Clip Rail
Contents Include:

Product Code	Size (Inches)	Product Code	Size (Inches)	Product Code	Size (Inches)
31408	1/4	31414	7/16	31420	5/8
31410	5/16	31416	1/2	31422	11/16
31412	3/8	31418	9/16	31424	3/4

31926

31928 13 Piece 3/8" Drive Deep 12 Point Socket Set on Clip Rail
Contents Include:

Product Code	Size (Inches)	Product Code	Size (Inches)	Product Code	Size (Inches)
31408	1/4	31418	9/16	31428	7/8
31410	5/16	31420	5/8	31430	15/16
31412	3/8	31422	11/16	31432	1
31414	7/16	31424	3/4		
31416	1/2	31426	13/16		

31928

Features
- SUPERTORQUE® lobular openings for greater turning power without deforming the fastener.
- Designed for quick engagement on both 6 and 12 point fasteners.

WILLIAMS

3/8" DRIVE DEEP SOCKETS, 6 POINT, SAE

High-Polished Chrome Finish

Product Code	Size (Inches)	A OAL (Inches)	B Drive End Diameter (Inches)	C Working End Diameter (Inches)	D Broach Depth (Inches)	E Bolt Clearance Depth (Inches)	Bolt Clearance Diameter (Inches)	F Nose Length (Inches)
BD-608	1/4	2 1/8	11/16	13/32	1/4	1 11/16	7/32	1 5/8
BD-610	5/16	2 1/8	11/16	7/16	9/32	1 11/16	5/16	1 5/8
BD-611	11/32	2 1/8	11/16	1/2	1/4	1 11/16	11/32	1 5/8
BD-612	3/8	2 1/8	11/16	9/16	5/16	1 11/16	3/8	1 5/8
BD-614	7/16	2 1/8	11/16	19/32	3/8	1 11/16	7/16	1 5/8
BD-616	1/2	2 1/8	23/32	23/32	7/16	1 11/16	15/32	-
BD-618	9/16	2 3/8	25/32	25/32	7/16	1 9/16	17/32	-
BD-620	5/8	2 3/8	27/32	27/32	1/2	1 9/16	19/32	-
BD-622	11/16	2 5/8	15/16	15/16	17/32	1 3/4	21/32	-
BD-624	3/4	2 5/8	1	1	5/8	1 3/4	23/32	-
BD-626	13/16	2 3/4	1 1/16	1 1/16	11/16	1 27/32	25/32	-
BD-628	7/8	2 3/4	1 5/32	1 5/32	23/32	1 27/32	27/32	-
BD-630	15/16	2 3/4	1 1/4	1 1/4	25/32	2 1/32	27/32	-
BD-632	1	2 3/4	1 5/16	1 5/16	13/16	2 1/32	31/32	-

Fed. Spec: ANSI B107.1

BD-616 BD-608

WSBD-13HRC 13 Piece 3/8" Drive Deep 6 Point Socket Set on Clip Rail
Contents Include:

Product Code	Size (Inches)	Product Code	Size (Inches)	Product Code	Size (Inches)
BD-608	1/4	BD-618	9/16	BD-628	7/8
BD-610	5/16	BD-620	5/8	BD-630	15/16
BD-612	3/8	BD-622	11/16	BD-632	1
BD-614	7/16	BD-624	3/4		
BD-616	1/2	BD-626	13/16		

WSBD-13HRC

Features
- SUPERTORQUE® lobular openings for greater turning power without deforming the fastener.
- Designed for maximum engagement on 6 point fasteners.

Made in U.S.A.

31316 31308

WILLIAMS®

3/8" DRIVE DEEP SOCKETS, 6 POINT, SAE

High-Polished Chrome Finish

		A	B	C	D	E		F
Product Code	Size (Inches)	OAL (Inches)	Drive End Diameter (Inches)	Working End Diameter (Inches)	Broach Depth (Inches)	Bolt Clearance Depth (Inches)	Bolt Clearance Diameter (Inches)	Nose Length (Inches)
31308	1/4	2 1/2	11/16	7/16	11/32	1 11/16	7/32	1 5/8
31310	5/16	2 1/2	11/16	15/32	3/8	1 11/16	5/16	1 5/8
31312	3/8	2 1/2	11/16	9/16	3/8	1 11/16	3/8	1 5/8
31314	7/16	2 1/2	11/16	5/8	11/32	1 11/16	7/16	1 5/8
31316	1/2	2 1/2	3/4	3/4	13/32	1 11/32	15/32	-
31318	9/16	2 1/2	25/32	25/32	17/32	1 9/16	17/32	-
31320	5/8	2 1/2	7/8	7/8	19/32	1 9/16	19/32	-
31322	11/16	2 1/2	15/16	15/16	1/2	1 11/16	21/32	-
31324	3/4	2 1/2	1	1	9/16	1 11/16	23/32	-
31326	13/16	2 1/2	1 1/8	1 1/8	9/16	2 1/32	25/32	-
31328	7/8	2 1/2	1 3/16	1 3/16	21/32	2 1/32	27/32	-
31330	15/16	2 1/2	1 1/4	1 1/4	21/32	2 1/32	27/32	-
31332	1	2 1/2	1 5/16	1 5/16	11/16	2	31/32	-

Fed. Spec: ANSI B107.1

31940

31940 9 Piece 3/8" Drive Deep 6 Point Socket Set on Clip Rail

Contents Include:

Product Code	Size (Inches)	Product Code	Size (Inches)	Product Code	Size (Inches)
31308	1/4	31314	7/16	31320	5/8
31310	5/16	31316	1/2	31322	11/16
31312	3/8	31318	9/16	31324	3/4

31941

31941 13 Piece 3/8" Drive Deep 6 Point Socket Set on Clip Rail

Contents Include:

Product Code	Size (Inches)	Product Code	Size (Inches)	Product Code	Size (Inches)
31308	1/4	31318	9/16	31328	7/8
31310	5/16	31320	5/8	31330	15/16
31312	3/8	31322	11/16	31332	1
31314	7/16	31324	3/4		
31316	1/2	31326	13/16		

Features

- SUPERTORQUE® lobular openings for greater turning power without deforming the fastener.
- Designed for quick engagement on 6 point fasteners.

31303

31301

WILLIAMS®

3/8" DRIVE SPARK PLUG SOCKETS, 6 POINT, SAE

High-Polished Chrome Finish

		A	B	C	D	E		F
Product Code	Size (Inches)	OAL (Inches)	Drive End Diameter (Inches)	Working End Diameter (Inches)	Broach Depth (Inches)	Bolt Clearance Depth (Inches)	Bolt Clearance Diameter (Inches)	Nose Length (Inches)
31301	5/8	2 27/32	11/16	27/32	15/32	29/32	11/16	NA
31303	13/16	2 23/32	13/16	1 1/16	15/32	1 1/32	7/8	NA

Fed. Spec: ANSI B107.1

Features

- Rubber insert holds spark plug and prevents damage to insulator.

WILLIAMS

12 M

3/8" DRIVE SHALLOW SOCKETS, 12 POINT, METRIC

High-Polished Chrome Finish

		A	B	C	D	E		F
Product Code	Size (MM)	OAL (Inches)	Drive End Diameter (Inches)	Working End Diameter (Inches)	Broach Depth (Inches)	Bolt Clearance Depth (Inches)	Bolt Clearance Diameter (Inches)	Nose Length (Inches)
BM-1206	6	1 1/32	11/16	13/32	7/32	9/16	7/32	17/32
BM-1207	7	1 1/32	11/16	13/32	7/32	9/16	7/32	17/32
BM-1208	8	1 1/32	11/16	15/32	1/4	9/16	9/32	17/32
BM-1209	9	1 1/32	11/16	1/2	9/32	9/16	11/32	17/32
BM-1210	10	1 1/32	11/16	9/16	9/32	9/16	11/32	17/32
BM-1211	11	1 1/32	11/16	5/8	9/32	9/16	11/32	17/32
BM-1212	12	1 1/32	11/16	21/32	11/32	9/16	11/32	17/32
BM-1213	13	1 1/32	23/32	23/32	11/32	9/16	3/8	-
BM-1214	14	1 1/32	25/32	25/32	7/16	17/32	17/32	-
BM-1215	15	1 3/32	13/16	13/16	19/32	19/32	9/16	-
BM-1216	16	1 1/8	27/32	27/32	19/32	5/8	19/32	-
BM-1217	17	1 5/32	29/32	29/32	5/8	5/8	5/8	-
BM-1218	18	1 5/32	31/32	31/32	5/8	21/32	11/16	-
BM-1219	19	1 3/16	1	1	21/32	11/16	23/32	-
BM-1220	20	1 7/32	1 1/32	1 1/32	11/16	23/32	3/4	-
BM-1221	21	1 1/4	1 1/8	1 1/8	23/32	23/32	3/16	-
BM-1222	22	1 9/32	1 5/32	1 5/32	3/4	3/4	3/16	-
BM-1223	23	1 5/16	1 3/16	1 3/16	3/4	25/32	7/8	-
BM-1224	24	1 3/8	1 1/4	1 1/4	13/16	27/32	7/8	-
BM-1226	26	1 7/16	1 11/32	1 11/32	27/32	7/8	15/16	-

Fed. Spec: ANSI B107.5

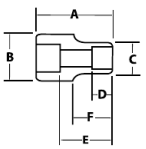

MSB-17RC 17 Piece 3/8" Drive Shallow 12 Point Socket Set on Clip Rail

Contents Include:

Product Code	Size (MM)	Product Code	Size (MM)	Product Code	Size (MM)	Product Code	Size (MM)
BM-1206	6	BM-1211	11	BM-1216	16	BM-1221	21
BM-1207	7	BM-1212	12	BM-1217	17	BM-1222	22
BM-1208	8	BM-1213	13	BM-1218	18		
BM-1209	9	BM-1214	14	BM-1219	19		
BM-1210	10	BM-1215	15	BM-1220	20		

MSB-20RC 20 Piece 3/8" Drive Shallow 12 Point Socket Set on Clip Rail

Contents Include:

Product Code	Size (MM)	Product Code	Size (MM)	Product Code	Size (MM)	Product Code	Size (MM)
BM-1206	6	BM-1211	11	BM-1216	16	BM-1221	21
BM-1207	7	BM-1212	12	BM-1217	17	BM-1222	22
BM-1208	8	BM-1213	13	BM-1218	18	BM-1223	23
BM-1209	9	BM-1214	14	BM-1219	19	BM-1224	24
BM-1210	10	BM-1215	15	BM-1220	20	BM-1226	26

Features

- SUPERTORQUE® lobular openings for greater turning power without deforming the fastener.
- Designed for quick engagement on both 6 and 12 point fasteners.

USA Made in U.S.A.

MSB-17RC

MSB-20RC

WILLIAMS®

3/8" DRIVE SHALLOW SOCKETS, 6 POINT, METRIC

High-Polished Chrome Finish

Product Code	Size (MM)	A OAL (Inches)	B Drive End Diameter (Inches)	C Working End Diameter (Inches)	D Broach Depth (Inches)	E Bolt Clearance Depth (Inches)	Bolt Clearance Diameter (Inches)	F Nose Length (Inches)
BM-605½	5 ½	1 1/32	11/16	13/32	7/32	9/16	3/16	17/32
BM-606	6	1 1/32	11/16	13/32	7/32	9/16	7/32	17/32
BM-607	7	1 1/32	11/16	13/32	7/32	9/16	7/32	17/32
BM-608	8	1 1/32	11/16	15/32	1/4	9/16	9/32	17/32
BM-609	9	1 1/32	11/16	1/2	9/32	9/16	11/32	17/32
BM-610	10	1 1/32	11/16	9/16	9/32	9/16	11/32	17/32
BM-611	11	1 1/32	11/16	5/8	9/32	9/16	11/32	17/32
BM-612	12	1 1/32	11/16	21/32	11/32	9/16	11/32	17/32
BM-613	13	1 1/32	23/32	23/32	11/32	9/16	3/8	-
BM-614	14	1 1/32	25/32	25/32	7/16	17/32	17/32	-
BM-615	15	1 3/32	13/16	13/16	19/32	19/32	9/16	-
BM-616	16	1 1/8	27/32	27/32	19/32	5/8	19/32	-
BM-617	17	1 5/32	29/32	29/32	5/8	5/8	5/8	-
BM-618	18	1 5/32	31/32	31/32	5/8	21/32	11/16	-
BM-619	19	1 3/16	1	1	21/32	11/16	23/32	-
BM-620	20	1 7/32	1 1/32	1 1/32	11/16	23/32	3/4	-
BM-621	21	1 1/4	1 1/8	1 1/8	23/32	23/32	3/16	-
BM-622	22	1 9/32	1 5/32	1 5/32	3/4	3/4	3/16	-
BM-623	23	1 5/16	1 3/16	1 3/16	3/4	25/32	7/8	-
BM-624	24	1 3/8	1 1/4	1 1/4	13/16	27/32	7/8	-

Fed. Spec: ANSI B107.5

MSB-12HRC 12 Piece 3/8" Drive Shallow 6 Point Socket Set on Clip Rail

Contents Include:

Product Code	Size (MM)	Product Code	Size (MM)	Product Code	Size (MM)
BM-608	8	BM-612	12	BM-616	16
BM-609	9	BM-613	13	BM-617	17
BM-610	10	BM-614	14	BM-618	18
BM-611	11	BM-615	15	BM-619	19

MSB-20HRC 20 Piece 3/8" Drive Shallow 6 Point Socket Set on Clip Rail

Contents Include:

Product Code	Size (MM)	Product Code	Size (MM)	Product Code	Size (MM)	Product Code	Size (MM)
BM-605½	5 ½	BM-610	10	BM-615	15	BM-620	20
BM-606	6	BM-611	11	BM-616	16	BM-621	21
BM-607	7	BM-612	12	BM-617	17	BM-622	22
BM-608	8	BM-613	13	BM-618	18	BM-623	23
BM-609	9	BM-614	14	BM-619	19	BM-624	24

Features

- SUPERTORQUE® lobular openings for greater turning power without deforming the fastener.
- Designed for maximum engagement on 6 point fasteners.

Made in U.S.A.

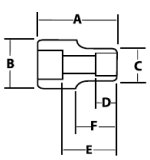

MSB-12HRC

MSB-20RC

WILLIAMS®

12 M

3/8" DRIVE SHALLOW SOCKETS, 12 POINT, METRIC

High-Polished Chrome Finish

		A	B	C	D	E		F
Product Code	Size (MM)	OAL (Inches)	Drive End Diameter (Inches)	Working End Diameter (Inches)	Broach Depth (Inches)	Bolt Clearance Depth (Inches)	Bolt Clearance Diameter (Inches)	Nose Length (Inches)
31606	6	1	11/16	3/8	11/32	17/32	7/32	9/16
31607	7	1	11/16	7/16	5/16	17/32	7/32	9/16
31608	8	1	11/16	15/32	11/32	1/2	1/4	9/16
31609	9	1	11/16	17/32	3/8	17/32	9/32	9/16
31610	10	1	11/16	9/16	11/32	15/32	3/8	9/16
31611	11	1	11/16	5/8	11/32	1/2	13/32	9/16
31612	12	1	11/16	11/16	3/8	9/16	7/16	-
31613	13	1	3/4	3/4	3/8	9/16	1/2	-
31614	14	1 1/16	25/32	25/32	17/32	17/32		-
31615	15	1 1/16	13/16	13/16	17/32	17/32		-
31616	16	1 1/16	7/8	7/8	17/32	17/32		-
31617	17	1 1/16	15/16	15/16	17/32	17/32		-
31618	18	1 1/16	31/32	31/32	17/32	17/32		-
31619	19	1 5/32	1	1	5/8	5/8		-

Fed. Spec: ANSI B107.5

31612 31606

31942 8 Piece 3/8" Drive Shallow 12 Point Socket Set on Clip Rail

Contents Include:

Product Code	Size (MM)	Product Code	Size (MM)	Product Code	Size (MM)
31610	10	31613	13	31616	16
31611	11	31614	14	31617	17
31612	12	31615	15		

31943 14 Piece 3/8" Drive Shallow 12 Point Socket Set on Clip Rail

Contents Include:

Product Code	Size (MM)	Product Code	Size (MM)	Product Code	Size (MM)
31606	6	31611	11	31616	16
31607	7	31612	12	31617	17
31608	8	31613	13	31618	18
31609	9	31614	14	31619	19
31610	10	31615	15		

Features

- SUPERTORQUE® lobular openings for greater turning power without deforming the fastener.
- Designed for maximum engagement on 6 point fasteners.

31942

31943

WILLIAMS®

3/8" DRIVE SHALLOW SOCKETS, 6 POINT, METRIC

High-Polished Chrome Finish

Product Code	Size (MM)	A OAL (Inches)	B Drive End Diameter (Inches)	C Working End Diameter (Inches)	D Broach Depth (Inches)	E Bolt Clearance Depth (Inches)	Bolt Clearance Diameter (Inches)	F Nose Length (Inches)
31506	6	1	11/16	3/8	11/32	17/32	7/32	9/16
31507	7	1	11/16	7/16	5/16	17/32	7/32	9/16
31508	8	1	11/16	15/32	11/32	1/2	1/4	9/16
31509	9	1	11/16	17/32	3/8	17/32	9/32	9/16
31510	10	1	11/16	9/16	11/32	15/32	3/8	9/16
31511	11	1	11/16	5/8	11/32	1/2	13/32	9/16
31512	12	1	11/16	11/16	3/8	9/16	7/16	-
31513	13	1	3/4	3/4	3/8	9/16	1/2	-
31514	14	1 1/16	25/32	25/32	17/32	17/32		-
31515	15	1 1/16	13/16	13/16	17/32	17/32		-
31516	16	1 1/16	7/8	7/8	17/32	17/32		-
31517	17	1 1/16	15/16	15/16	17/32	17/32		-
31518	18	1 1/16	31/32	31/32	17/32	17/32		-
31519	19	1 5/32	1	1	5/8	5/8		-

Fed. Spec: ANSI B107.5

31512 31506

31930 8 Piece 3/8" Drive Shallow 6 Point Socket Set on Clip Rail

Contents Include:

Product Code	Size (MM)	Product Code	Size (MM)	Product Code	Size (MM)
31510	10	31513	13	31516	16
31511	11	31514	14	31517	17
31512	12	31515	15		

31932 14 Piece 3/8" Drive Shallow 6 Point Socket Set on Clip Rail

Contents Include:

Product Code	Size (MM)	Product Code	Size (MM)	Product Code	Size (MM)
31506	6	31511	11	31516	16
31507	7	31512	12	31517	17
31508	8	31513	13	31518	18
31509	9	31514	14	31519	19
31510	10	31515	15		

Features

- SUPERTORQUE® lobular openings for greater turning power without deforming the fastener.
- Designed for maximum engagement on 6 point fasteners.

31930

31932

WILLIAMS

3/8" DRIVE DEEP SOCKETS, 6 POINT, METRIC

High-Polished Chrome Finish

Product Code	Size (MM)	A OAL (Inches)	B Drive End Diameter (Inches)	C Working End Diameter (Inches)	D Broach Depth (Inches)	E Bolt Clearance Depth (Inches)	Bolt Clearance Diameter (Inches)	F Nose Length (Inches)
BMD-606	6	2 1/8	11/16	13/32	7/32	1 11/16	7/32	1 5/8
BMD-607	7	2 1/8	11/16	13/32	9/32	1 11/16	1/4	1 5/8
BMD-608	8	2 1/8	11/16	15/32	9/32	1 11/16	5/16	1 5/8
BMD-609	9	2 1/8	11/16	1/2	9/32	1 11/16	11/32	1 5/8
BMD-610	10	2 1/8	11/16	9/16	5/16	1 11/16	3/8	1 5/8
BMD-611	11	2 1/8	11/16	5/8	3/8	1 11/16	7/16	1 5/8
BMD-612	12	2 1/8	11/16	21/32	13/32	1 11/16	15/32	1 5/8
BMD-613	13	2 1/8	23/32	23/32	13/32	1 5/8	17/32	-
BMD-614	14	2 3/8	25/32	25/32	13/32	1 9/16	17/32	-
BMD-615	15	2 3/8	13/16	13/16	13/32	1 9/16	17/32	-
BMD-616	16	2 3/8	27/32	27/32	13/32	1 9/16	19/32	-
BMD-617	17	2 21/32	29/32	29/32	1/2	1 13/16	5/8	-
BMD-618	18	2 21/32	31/32	31/32	1/2	1 13/16	21/32	-
BMD-619	19	2 21/32	1	1	5/8	1 15/16	23/32	-
BMD-620	20	2 21/32	1 1/32	1 1/32	5/8	1 15/16	25/32	-
BMD-622	22	2 7/8	1 5/32	1 5/32	5/8	2 5/32	7/8	-
BMD-623	23	2 7/8	1 3/16	1 3/16	1/2	2 5/32	27/32	-
BMD-624	24	2 7/8	1 1/4	1 1/4	9/16	2 5/32	15/16	-
BMD-625	25	2 7/8	1 9/32	1 9/32	9/16	2 1/8	31/32	-

Fed. Spec: ANSI B107.5

BMD-612 BMD-606

MSBD-12HRC 12 Piece 3/8" Drive Deep 6 Point Socket Set on Clip Rail

Contents Include:

Product Code	Size (MM)	Product Code	Size (MM)	Product Code	Size (MM)
BMD-608	8	BMD-612	12	BMD-616	16
BMD-609	9	BMD-613	13	BMD-617	17
BMD-610	10	BMD-614	14	BMD-618	18
BMD-611	11	BMD-615	15	BMD-619	19

MSBD-19HRC 19 Piece 3/8" Drive Deep 6 Point Socket Set on Clip Rail

Contents Include:

Product Code	Size (MM)	Product Code	Size (MM)	Product Code	Size (MM)	Product Code	Size (MM)
BMD-606	6	BMD-611	11	BMD-616	16	BMD-622	22
BMD-607	7	BMD-612	12	BMD-617	17	BMD-623	23
BMD-608	8	BMD-613	13	BMD-618	18	BMD-624	24
BMD-609	9	BMD-614	14	BMD-619	19	BMD-625	25
BMD-610	10	BMD-615	15	BMD-620	20		

Features

USA Made in U.S.A.

- SUPERTORQUE® lobular openings for greater turning power without deforming the fastener.
- Designed for maximum engagement on 6 point fasteners.

MSBD-12HRC

MSBD-19HRC

WILLIAMS®

12 M

3/8" DRIVE DEEP SOCKETS, 12 POINT, METRIC

High-Polished Chrome Finish

31812 31806

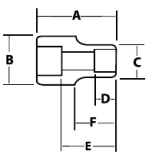

Product Code	Size (MM)	A OAL (Inches)	B Drive End Diameter (Inches)	C Working End Diameter (Inches	D Broach Depth (Inches)	E Bolt Clearance Depth (Inches)	Bolt Clearance Diameter (Inches)	F Nose Length (Inches)
31806	6	2 1/2	11/16	3/8	5/8	1 9/16	7/32	1 7/32
31807	7	2 1/2	11/16	7/16	5/8	1 9/16	1/4	1 7/32
31808	8	2 1/2	11/16	7/16	5/8	1 9/16	9/32	1 7/32
31809	9	2 1/2	11/16	17/32	5/8	1 9/16	5/16	1 7/32
31810	10	2 1/2	11/16	9/16	1	1 11/16	3/8	1 7/32
31811	11	2 1/2	11/16	5/8	1	1 25/32	13/32	1 7/32
31812	12	2 1/2	11/16	11/16	1	1 25/32	7/16	-
31813	13	2 1/2	23/32	23/32	1	1 31/32	1/2	-
31814	14	2 1/2	3/4	3/4	1	2	17/32	-
31815	15	2 1/2	13/16	13/16	1	1 15/16	9/16	-
31816	16	2 1/2	7/8	7/8	1	1 29/32	19/32	-
31817	17	2 1/2	15/16	15/16	1	2	21/32	-
31818	18	2 1/2	31/32	31/32	1 1/16	1 29/32	11/16	-
31819	19	2 1/2	1	1	1 3/32	1 31/32	23/32	-

Fed. Spec: ANSI B107.5

31934 8 Piece 3/8" Drive Deep 12 Point Socket Set on Clip Rail

Contents Include:

Product Code	Size (MM)	Product Code	Size (MM)	Product Code	Size (MM)
31810	10	31813	13	31816	16
31811	11	31814	14	31817	17
31812	12	31815	15		

31936 14 Piece 3/8" Drive Deep 12 Point Socket Set on Clip Rail

Contents Include:

Product Code	Size (MM)	Product Code	Size (MM)	Product Code	Size (MM)
31806	6	31811	11	31816	16
31807	7	31812	12	31817	17
31808	8	31813	13	31818	18
31809	9	31814	14	31819	19
31810	10	31815	15		

Features

- SUPERTORQUE® lobular openings for greater turning power without deforming the fastener.
- Designed for quick engagement on both 6 and 12 point fasteners.

31934

31936

WILLIAMS®

3/8" DRIVE DEEP SOCKETS, 6 POINT, METRIC

High-Polished Chrome Finish

Product Code	Size (MM)	A OAL (Inches)	B Drive End Diameter (Inches)	C Working End Diameter (Inches	D Broach Depth (Inches)	E Bolt Clearance Depth (Inches)	Bolt Clearance Diameter (Inches)	F Nose Length (Inches)
31706	6	2 1/2	11/16	3/8	5/8	1 9/16	7/32	1 7/32
31707	7	2 1/2	11/16	7/16	5/8	1 9/16	1/4	1 7/32
31708	8	2 1/2	11/16	7/16	5/8	1 9/16	9/32	1 7/32
31709	9	2 1/2	11/16	17/32	5/8	1 9/16	5/16	1 7/32
31710	10	2 1/2	11/16	9/16	1	1 11/16	3/8	1 7/32
31711	11	2 1/2	11/16	5/8	1	1 25/32	13/32	1 7/32
31712	12	2 1/2	11/16	11/16	1	1 25/32	7/16	-
31713	13	2 1/2	23/32	23/32	1	1 31/32	1/2	-
31714	14	2 1/2	3/4	3/4	1	2	17/32	-
31715	15	2 1/2	13/16	13/16	1	1 15/16	9/16	-
31716	16	2 1/2	7/8	7/8	1	1 29/32	19/32	-
31717	17	2 1/2	15/16	15/16	1	2	21/32	-
31718	18	2 1/2	31/32	31/32	1 1/16	1 29/32	11/16	-
31719	19	2 1/2	1	1	1 3/32	1 31/32	23/32	-

Fed. Spec: ANSI B107.5

31712 31706

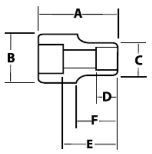

31944 8 Piece 3/8" Drive Deep 6 Point Socket Set on Clip Rail

Contents Include:

Product Code	Size (MM)	Product Code	Size (MM)	Product Code	Size (MM)
31710	10	31713	13	31716	16
31711	11	31714	14	31717	17
31712	12	31715	15		

31945 14 Piece 3/8" Drive Deep 6 Point Socket Set on Clip Rail

Contents Include:

Product Code	Size (MM)	Product Code	Size (MM)	Product Code	Size (MM)
31706	6	31711	11	31716	16
31707	7	31712	12	31717	17
31708	8	31713	13	31718	18
31709	9	31714	14	31719	19
31710	10	31715	15		

Features

- SUPERTORQUE® lobular openings for greater turning power without deforming the fastener.
- Designed for quick engagement on 6 point fasteners.

31944

31945

WILLIAMS®

TS38375

TSCS3813

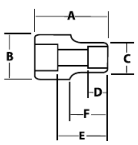

3/8" DRIVE TURBOSOCKET® SALVAGE/DAMAGED FASTENER SOCKETS

Black Industrial Finish, Metric and SAE

Product Code	Size (Inches)	A OAL (Inches)	B Drive End Diameter (Inches)	C Working End Diameter (Inches)	D Broach Depth (Inches)	E Bolt Clearance Depth (Inches)	Bolt Clearance Diameter (Inches)	F Nose Length (Inches)
TS38375	3/8	1 1/4	11/16	19/32	13/32	3/4	3/8	11/16
TS38437	7/16	1 1/4	11/16	21/32	1/2	3/4	7/16	11/16
TS38500	1/2	1 1/4	3/4	3/4	1/2	3/4	1/2	-
TS38562	9/16	1 1/4	13/16	13/16	1/2	23/32	9/16	-
TS38625	5/8	1 1/4	29/32	29/32	1/2	19/32	5/8	-
TS38687	11/16	1 13/32	31/32	31/32	21/32	29/32	23/32	-
TS38750	3/4	1 13/32	1 1/16	1 1/16	21/32	29/32	3/4	-

Product Code	Size (MM)	OAL (Inches)	Drive End Diameter (Inches)	Working End Diameter (Inches)	Broach Depth (Inches)	Bolt Clearance Depth (Inches)	Bolt Clearance Diameter (Inches)	Nose Length (Inches)
TS38394	10	1 1/4	11/16	5/8	13/32	3/4	13/32	11/16
TS38472	12	1 1/4	23/32	23/32	1/2	3/4	15/32	-
TS38512	13	1 1/4	3/4	3/4	1/2	3/4	17/32	-
TS38551	14	1 1/4	13/16	13/16	1/2	23/32	9/16	-
TS38591	15	1 1/4	27/32	27/32	1/2	19/32	19/32	-
TS38669	17	1 13/32	31/32	31/32	21/32	29/32	23/32	-

TSFS3807 7 Piece TURBOSOCKET® Salvage Socket Set on Clip Rail, SAE

Contents Include:

Product Code	Size (Inches)	Product Code	Size (Inches)	Product Code	Size (Inches)
TS38375	3/8	TS38562	9/16	TS38750	3/4
TS38437	7/16	TS38625	5/8		
TS38500	1/2	TS38687	11/16		

TSCS3813 13 Piece TURBOSOCKET® Salvage Socket Set on Clip Rail, SAE and Metric

Contents Include:

Product Code	Size (Inches)	Product Code	Size (MM)
TS38375	3/8	TS38394	10
TS38437	7/16	TS38472	12
TS38500	1/2	TS38512	13
TS38562	9/16	TS38551	14
TS38625	5/8	TS38591	15
TS38687	11/16	TS38669	17
TS38750	3/4		

TSMS3809 9 Piece TURBOSOCKET® Salvage Socket Set on Clip Rail, Metric

Contents Include:

Product Code	Size (MM)	Product Code	Size (MM)	Product Code	Size (MM)
TS38394	10	TS38512	13	TS38625	16 (5/8")
TS38437	11 (7/16")	TS38551	14	TS38669	17
TS38472	12	TS38591	15	TS38750	19 (3/4")

Features

Made in U.S.A.

- Quickly and easily remove damaged or rounded nuts and bolts.
- Place socket on fastener and turn with ratchet, breaker bar or T-handle.
- Grip on fastener tightens as more torque is applied.
- No hammering is required to install socket over fastener.
- Use on all types of standard nuts and bolts as well as studs, pipe nipples, and corroded auto and marine fasteners.
- May be used for "best fit" on metric and fractional fasteners.
- May be used with air or electric impact wrench for extra speed and turning power.

TSMS3809

TSFS3807

WILLIAMS

3/8" DRIVE STANDARD LENGTH HEX BIT SOCKETS, SAE

High-Polished Chrome Finish

Product Code	Size (Inches)	Socket Length (Inches)	Socket Outside Diameter (Inches)	Overall Length (Inches)	Replacement Bit Product Code
BA-3A	3/32	1 1/16	11/16	1 27/32	BITH03T-01
BA-4A	1/8	1 1/16	11/16	1 7/8	BITH04-03
BA-5A	5/32	1 1/16	11/16	1 7/8	BITH05-03
BA-6A	3/16	1 1/16	11/16	1 7/8	BITH06-03
BA-7A	7/32	1 1/16	11/16	1 7/8	BITH07-03
BA-8A	1/4	1 1/16	11/16	1 7/8	BITH08-03
BA-10A	5/16	1 1/16	11/16	1 7/8	BITH10-03
BA-12A	3/8	1 1/16	23/32	1 7/8	BITH12-01

BA-7A

WSB-7A 7 Piece Hex Bit Socket Set on Clip Rail

Contents Include:

Product Code	Size (Inches)	Product Code	Size (Inches)
BA-4A	1/8	BA-8A	1/4
BA-5A	5/32	BA-10A	5/16
BA-6A	3/16	BA-12A	3/8
BA-7A	7/32		

WSB-7A

WSBS-10RC 10 Piece Hex Bit Socket Set on Clip Rail, 3/8" and 1/2" Drive

Contents Include:

3/8" Drive Product Code	Size (Inches)	3/8" Drive Product Code	Size (Inches)	1/2" Drive Product Code	Size (Inches)
BA-4A	1/8	BA-8A	1/4	SA-16A	1/2
BA-5A	5/32	BA-10A	5/16	SA-18A	9/16
BA-6A	3/16	BA-12A	3/8	SA-20A	5/8
BA-7A	7/32				

WSBS-10RC

Features

- High-polished chrome finish socket cleans easily.
- Two piece design allows bits to be replaced easily.

Made in U.S.A.

WILLIAMS

3/8" DRIVE STANDARD LENGTH HEX BIT SOCKETS, SAE

High-Polished Chrome Finish

Product Code	Size (Inches)	Socket Length (Inches)	Socket Outside Diameter (Inches)	Overall Length (Inches)	Bit Length (Inches)
35100	1/8	1 3/16	3/4	1 27/32	21/32
35101	9/64	1 3/16	3/4	1 27/32	21/32
35102	5/32	1 3/16	3/4	1 27/32	21/32
35103	3/16	1 3/16	3/4	1 27/32	21/32
35104	7/32	1 3/16	3/4	1 27/32	21/32
35105	1/4	1 3/16	3/4	1 27/32	21/32
35106	5/16	1 3/16	3/4	1 31/32	13/16
35107	3/8	1 3/16	3/4	1 31/32	13/16

35100

31902 8 Piece Hex Bit Socket Set on Clip Rail

Contents Include:

Product Code	Size (Inches)	Product Code	Size (Inches)	Product Code	Size (Inches)
35100	1/8	35103	3/16	35106	5/16
35101	9/64	35104	7/32	35107	3/8
35102	5/32	35105	1/4		

31902

Features

- High-polished chrome finish socket cleans easily.

35170

31904

WILLIAMS

3/8" DRIVE STANDARD LENGTH HEX BIT SOCKETS, METRIC

High-Polished Chrome Finish

Product Code	Size (MM)	Socket Length (Inches)	Socket Outside Diameter (Inches)	Overall Length (Inches)	Bit Length (Inches)
35170	4	1 3/16	3/4	1 27/32	21/32
35171	5	1 3/16	3/4	1 27/32	21/32
35172	6	1 3/16	3/4	1 27/32	21/32
35173	7	1 3/16	3/4	1 27/32	21/32
35174	8	1 3/16	3/4	1 31/32	13/16
35175	9	1 3/16	3/4	1 31/32	13/16
35176	10	1 3/16	3/4	1 31/32	13/16

31904 7 Piece Hex Bit Socket Set on Clip Rail
Contents Include:

Product Code	Size (MM)	Product Code	Size (MM)	Product Code	Size (MM)
35170	4	35173	7	35176	10
35171	5	35174	8		
35172	6	35175	9		

Features
- High-polished chrome finish socket cleans easily.

BA-7HBA

WSBB-7RC

WILLIAMS

3/8" DRIVE BALL TIP HEX BIT SOCKETS, SAE

High-Polished Chrome Finish

Product Code	Size (Inches)	Socket Length (Inches)	Socket Outside Diameter (Inches)	Overall Length (Inches)	Replacement Bit Product Code
BA-3HBA	3/32	1 1/16	11/16	1 27/32	BITHB03T-01
BA-4HBA	1/8	1 1/16	11/16	1 7/8	BITHB04-02
BA-5HBA	5/32	1 1/16	11/16	1 7/8	BITHB05-02
BA-6HBA	3/16	1 1/16	11/16	1 7/8	BITHB06-02
BA-7HBA	7/32	1 1/16	11/16	1 7/8	BITHB07-02
BA-8HBA	1/4	1 1/16	11/16	1 7/8	BITHB08-02
BA-10HBA	5/16	1 1/16	11/16	1 7/8	BITHB10-01
BA-12HBA	3/8	1 1/16	23/32	1 7/8	BITHB12-01

WSBB-7RC 7 Piece Ball Tip Hex Bit Socket Set on Clip Rail
Contents Include:

Product Code	Size (Inches)	Product Code	Size (Inches)	Product Code	Size (Inches)
BA-4HBA	1/8	BA-7HBA	7/32	BA-12HBA	3/8
BA-5HBA	5/32	BA-8HBA	1/4		
BA-6HBA	3/16	BA-10HBA	5/16		

Features
- High-polished chrome finish socket cleans easily.
- Two piece design allows bits to be replaced easily.

Made in U.S.A.

35120

31906

WILLIAMS

3/8" DRIVE BALL TIP HEX BIT SOCKETS, SAE

High-Polished Chrome Finish

Product Code	Size (Inches)	Socket Length (Inches)	Socket Outside Diameter (Inches)	Overall Length (Inches)	Bit Length (Inches)
35120	1/8	1 3/16	3/4	1 27/32	11/16
35121	9/64	1 3/16	3/4	1 27/32	11/16
35122	5/32	1 3/16	3/4	1 27/32	11/16
35123	3/16	1 3/16	3/4	1 27/32	11/16
35124	7/32	1 3/16	3/4	1 27/32	11/16
35125	1/4	1 3/16	3/4	1 27/32	11/16
35126	5/16	1 3/16	3/4	1 31/32	13/16
35127	3/8	1 3/16	3/4	1 31/32	13/16

31906 8 Piece Ball Tip Hex Bit Socket Set on Clip Rail
Contents Include:

Product Code	Size (Inches)	Product Code	Size (Inches)	Product Code	Size (Inches)
35120	1/8	35123	3/16	35126	5/16
35121	9/64	35124	7/32	35127	3/8
35122	5/32	35125	1/4		

Features
- High-polished chrome finish socket cleans easily.

WILLIAMS

3/8" DRIVE LONG HEX BIT SOCKETS, SAE

High-Polished Chrome Finish

Product Code	Size (Inches)	Socket Length (Inches)	Socket Outside Diameter (Inches)	Overall Length (Inches)	Replacement Bit Product Code
BA-3LA	3/32	1 1/16	11/16	3 23/32	BITH03T-02
BA-4LA	1/8	1 1/16	11/16	3 3/4	BITH04-04
BA-5LA	5/32	1 1/16	11/16	3 3/4	BITH05-04
BA-6LA	3/16	1 1/16	11/16	3 3/4	BITH06-04
BA-7LA	7/32	1 1/16	11/16	3 3/4	BITH07-04
BA-8LA	1/4	1 1/16	11/16	3 3/4	BITH08-04
BA-10LA	5/16	1 1/16	11/16	3 3/4	BITH10-04
BA-12LA	3/8	1 1/16	23/32	3 3/4	BITH12-02

BA-7LA

WSBS-7LRC 7 Piece Long Hex Bit Socket Set on Clip Rail

Contents Include:

Product Code	Size (Inches)	Product Code	Size (Inches)	Product Code	Size (Inches)
BA-4LA	1/8	BA-7LA	7/32	BA-12LA	3/8
BA-5LA	5/32	BA-8LA	1/4		
BA-6LA	3/16	BA-10LA	5/16		

WSBS-7LRC

Features
- High-polished chrome finish socket cleans easily.
- Two piece design allows bits to be replaced easily.

Made in U.S.A.

WILLIAMS

3/8" DRIVE LONG LENGTH HEX BIT SOCKETS, SAE

High-Polished Chrome Finish

Product Code	Size (Inches)	Socket Length (Inches)	Socket Outside Diameter (Inches)	Overall Length (Inches)	Bit Length (Inches)
35110	1/8	1 3/16	3/4	3 3/4	21/32
35111	9/64	1 3/16	3/4	3 3/4	21/32
35112	5/32	1 3/16	3/4	3 3/4	21/32
35113	3/16	1 3/16	3/4	3 3/4	21/32
35114	7/32	1 3/16	3/4	3 3/4	21/32
35115	1/4	1 3/16	3/4	3 3/4	21/32
35116	5/16	1 3/16	3/4	3 3/4	13/16
35117	3/8	1 3/16	3/4	3 3/4	13/16

35110

31949 8 Piece Hex Bit Socket Set on Clip Rail

Contents Include:

Product Code	Size (Inches)	Product Code	Size (Inches)	Product Code	Size (Inches)
35110	1/8	35113	3/16	35116	5/16
35111	9/64	35114	7/32	35117	3/8
35112	5/32	35115	1/4		

31949

Features
- High-polished chrome finish socket cleans easily.

WILLIAMS

3/8" DRIVE LONG LENGTH HEX BIT SOCKETS, METRIC

High-Polished Chrome Finish

Product Code	Size (MM)	Socket Length (Inches)	Socket Outside Diameter (Inches)	Overall Length (Inches)	Bit Length (Inches)
35164	4	1 3/16	3/4	3 3/4	21/32
35165	5	1 3/16	3/4	3 3/4	21/32
35166	6	1 3/16	3/4	3 3/4	21/32
35167	7	1 3/16	3/4	3 3/4	21/32
35168	8	1 3/16	3/4	3 3/4	13/16
35169	9	1 3/16	3/4	3 3/4	13/16
35163	10	1 3/16	3/4	3 3/4	13/16

35164

31951 7 Piece Hex Bit Socket Set on Clip Rail

Contents Include:

Product Code	Size (MM)	Product Code	Size (MM)	Product Code	Size (MM)
35170	4	35173	7	35176	10
35171	5	35174	8		
35172	6	35175	9		

31951

Features
- High-polished chrome finish socket cleans easily.

35130

31947

WILLIAMS®

3/8" DRIVE LONG BALL TIP HEX BIT SOCKETS, SAE

High-Polished Chrome Finish

Product Code	Size (Inches)	Socket Length (Inches)	Socket Outside Diameter (Inches)	Overall Length (Inches)	Bit Length (Inches)
35130	1/8	1 3/16	3/4	3 3/4	11/16
35131	9/64	1 3/16	3/4	3 3/4	11/16
35132	5/32	1 3/16	3/4	3 3/4	11/16
35133	3/16	1 3/16	3/4	3 3/4	11/16
35134	7/32	1 3/16	3/4	3 3/4	11/16
35135	1/4	1 3/16	3/4	3 3/4	11/16
35136	5/16	1 3/16	3/4	3 3/4	13/16
35137	3/8	1 3/16	3/4	3 3/4	13/16

31947 8 Piece Ball Tip Hex Bit Socket Set on Clip Rail

Contents Include:

Product Code	Size (Inches)	Product Code	Size (Inches)	Product Code	Size (Inches)
35130	1/8	35133	3/16	35136	5/16
35131	9/64	35134	7/32	35137	3/8
35132	5/32	35135	1/4		

Features

- High-polished chrome finish socket cleans easily.

35182

31910

WILLIAMS®

3/8" DRIVE TORX® BIT SOCKETS

High-Polished Chrome Finish

Product Code	Torx® Size	Socket Length (Inches)	Socket Outside Diameter (Inches)	Overall Length (Inches)	Bit Length (Inches)
35182	T25	1 3/16	3/4	1 27/32	11/16
35183	T27	1 3/16	3/4	1 27/32	11/16
35184	T30	1 3/16	3/4	1 27/32	11/16
35185	T40	1 3/16	3/4	1 31/32	13/16
35186	T45	1 3/16	3/4	1 31/32	13/16
35187	T47	1 3/16	3/4	2	13/16
35188	T50	1 3/16	3/4	2	13/16

31910 7 Piece Torx® Bit Socket Set on Clip Rail

Contents Include:

Product Code	Torx® Size	Product Code	Torx® Size	Product Code	Torx® Size
35182	T25	35185	T40	35188	T50
35183	T27	35186	T45		
35184	T30	35187	T47		

Features

- High-polished chrome finish socket cleans easily.

35192

31912

WILLIAMS®

3/8" DRIVE TAMPER-RESISTANT TORX® BIT SOCKETS

High-Polished Chrome Finish

Product Code	Torx® Size	Socket Length (Inches)	Socket Outside Diameter (Inches)	Overall Length (Inches)	Bit Length (Inches)
35192	T25	1 3/16	3/4	1 27/32	21/32
35193	T27	1 3/16	3/4	1 27/32	21/32
35194	T30	1 3/16	3/4	1 27/32	21/32
35195	T40	1 3/16	3/4	1 31/32	13/16
35196	T45	1 3/16	3/4	1 31/32	13/16
35197	T47	1 3/16	3/4	1 31/32	13/16
35198	T50	1 3/16	3/4	1 31/32	13/16

31912 7 Piece Tamper-Resistant Torx® Bit Socket Set on Clip Rail

Contents Include:

Product Code	Torx® Size	Product Code	Torx® Size	Product Code	Torx® Size
35192	T25	35195	T40	35198	T50
35193	T27	35196	T45		
35194	T30	35197	T47		

Features

- High-polished chrome finish socket cleans easily.

WILLIAMS®

3/8" DRIVE SCREWDRIVER BIT SOCKETS

High-Polished Chrome Finish, Phillips® and Slotted

Product Code	Size (Inches)	Socket Length (Inches)	Socket Outside Diameter (Inches)	Overall Length (Inches)	Replacement Bit Product Code
Slotted Bits:					
BA-5A-1S	3/16 x .032	1 1/16	11/16	1 13/16	BITHS01
BA-7A-2S	7/32 x .039	1 1/16	11/16	1 13/16	BITHS02
BA-10A-3S	9/32 x .047	1 1/16	11/16	1 7/8	BITHS04
BA-10A-4S	5/16 x .061	1 1/16	11/16	1 7/8	BITHS05
Phillips® Bits:					
BA-7A-1P	1	1 1/16	11/16	1 7/8	BITPH01-02
BA-7A-2P	2	1 1/16	11/16	1 7/8	BITPH02-02
BA-10A-3P	3	1 1/16	11/16	1 7/8	BITPH03-02
BA-12A-4P	4	1 1/16	23/32	1 7/8	BITPH04-01

BA-7A-2S

BA-7A-2P

WSBSP-8RC 6 Piece Screwdriver Bit Socket Set on Clip Rail

Contents Include:

Product Code	Tip Size	Product Code	Tip Size
BA-5A-1S	3/16 x .032	BA-7A-1P	1
BA-7A-2S	7/32 x .039	BA-7A-2P	2
BA-10A-3S	9/32 x .047	BA-10A-3P	3
BA-10A-4S	5/16 x .061	BA-12A-4P	4

Made in U.S.A.

Features

- High-polished chrome finish socket cleans easily.
- Two piece design allows bits to be replaced easily.

WSBSP-8RC

WILLIAMS®

3/8" DRIVE SCREWDRIVER BIT SOCKETS

High-Polished Chrome Finish, Phillips® and Slotted

Product Code	Tip Size (Inches)	Socket Length (Inches)	Socket Outside Diameter (Inches)	Overall Length (Inches)	Bit Length (Inches)
Slotted Bits:					
35140	1/4 x 1/32	1 3/16	3/4	1 7/8	11/16
35141	5/16 x 3/64	1 3/16	3/4	1 7/8	11/16
35142	3/8 x 1/16	1 3/16	3/4	1	13/16
35143	3/16 x 1/32	1 3/16	3/4	1	13/16
Phillips® Bits:					
35150	#1	1 3/16	3/4	1 27/32	21/32
35151	#2	1 3/16	3/4	1 27/32	11/16
35152	#3	1 3/16	3/4	1 27/32	11/16

35143

35150

31908 7 Piece Screwdriver Bit Socket Set on Clip Rail

Contents Include:

Product Code	Tip Size	Product Code	Tip Size
35140	3/16	35150	#1
35141	1/4	35151	#2
35142	5/16	35152	#3
35143	3/8		

Features

- High-polished chrome finish socket cleans easily.

31908

2-4A

2-140B

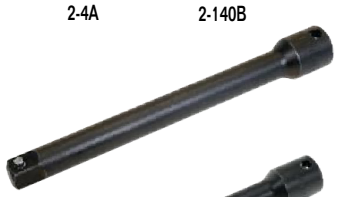
2-106A

2-103A

WILLIAMS

3/8" DRIVE IMPACT EXTENSIONS AND ACCESS

Black Industrial Finish

Product Code	Description	Length (Inches)	Socket Retention
2-103A	Impact Extension	3	Spring Plunger
2-106A	Impact Extension	6	Bull Ring
2-140B	Impact Universal Joint	2 1/4	Spring Plunger
2-4A	1/2" M x 3/8" F Adapter	1 1/4	Spring Plunger

Fed. Spec: ANSI B107.2

Made in U.S.A.

Features

- Specially heat treated for impact use to provide long life, safety, and durability.
- Spring plunger provides secure socket retention for safety and convenience.
- Suitable for use with pneumatic and electric impact wrenches.

2-02B

2-33B

WILLIAMS

3/8" DRIVE HEX TO SQUARE SHANK IMPACT EXTENSIONS

Black Industrial Finish

Product Code	Hex Shank Size (Inches)	Square Drive Size (Inches)	Length (Inches)
2-02B	1/4	3/8	2
2-33B	7/16	3/8	2 3/4

Made in U.S.A.

Features

- Specially heat treated for impact use to provide long life, safety, and durability.
- Spring plunger provides secure socket retention for safety and convenience.
- Suitable for use with pneumatic and electric impact wrenches.
- 2-33B - Recommended working torque of 80 ft.lb.

36004

36001

36003

36002

WILLIAMS

3/8" DRIVE IMPACT EXTENSIONS AND ACCESSORIES

Black Industrial Finish

Product Code	Description	Length (Inches)	Socket Retention
36002	Impact Extension	3	Ball
36003	Impact Extension	6	Ball
36001	Impact Universal Joint	2 1/8	Ball
36004	1/2" M x 3/8" F Adapter	1 5/16	Ball

Fed. Spec: ANSI B107.2

Made in U.S.A.

Features

- Specially heat treated for impact use to provide long life, safety, and durability.
- Ball socket retention for fast socket changes.
- Suitable for use with pneumatic and electric impact wrenches.
- Drive end features pin retention hole and groove.

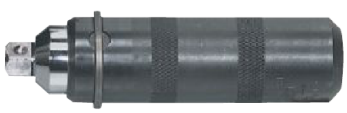
BHMD-30

WILLIAMS

3/8" DRIVE HAND IMPACT DRIVER

Black Industrial Finish

Product Code	Length (Inches)	Shank Diameter (Inches)
BHMD-30	5	1 1/4

Made in U.S.A.

Features

- Specially heat treated for impact use to provide long life, safety, and durability.
- Ball socket retention for fast socket changes.
- Ideal for loosening screws that cannot be loosened with an ordinary screwdriver.
- Impact driver is struck with a hammer to provide turning power.
- Hammer blow forces bit into screw head to reduce stripping.
- Hand impact driver can be used with all 3/8" drive sockets, such as 6-point and hex-bit sockets.

WILLIAMS®

3/8" DRIVE SHALLOW IMPACT SOCKETS, 6 POINT, SAE

Black Industrial Finish

Product Code	Size (Inches)	A OAL (Inches)	B Drive End Diameter (Inches)	C Working End Diameter (Inches)	D Broach Depth (Inches)	E Bolt Clearance Depth (Inches)	Bolt Clearance Diameter (Inches)	F Nose Length (Inches)
2-608	1/4	1 1/32	11/16	1/2	7/32	9/16	7/32	17/32
2-610	5/16	1 1/32	11/16	1/2	1/4	9/16	9/32	17/32
2-612	3/8	1 1/32	11/16	5/8	9/32	9/16	11/32	17/32
2-614	7/16	1 1/16	11/16	21/32	9/32	19/32	11/32	-
2-616	1/2	1 1/16	3/4	3/4	5/16	19/32	3/8	-
2-618	9/16	1 3/32	13/16	13/16	9/16	19/32	17/32	-
2-620	5/8	1 1/8	29/32	29/32	19/32	5/8	5/8	-
2-622	11/16	1 5/32	31/32	31/32	19/32	5/8	21/32	-
2-624	3/4	1 3/16	1 1/16	1 1/16	21/32	11/16	23/32	-
2-626	13/16	1 1/4	1 1/8	1 1/8	11/16	23/32	25/32	-
2-628	7/8	1 9/32	1 3/16	1 3/16	3/4	3/4	27/32	-
2-630	15/16	1 5/16	1 9/32	1 9/32	25/32	13/16	29/32	-
2-632	1	1 5/16	1 11/32	1 11/32	25/32	25/32	31/32	-

Fed. Spec: ANSI B107.2

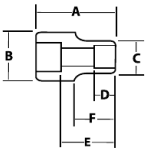

WS-2-8 8 Piece 3/8" Drive Shallow 6 Point Impact Socket Set on Clip Rail

Contents Include:

Product Code	Size (Inches)	Product Code	Size (Inches)
2-610	5/16	2-618	9/16
2-612	3/8	2-620	5/8
2-614	7/16	2-622	11/16
2-616	1/2	2-624	3/4

WS-2-8

WS-2-13 13 Piece 3/8" Drive Shallow 6 Point Impact Socket Set on Clip Rail

Contents Include:

Product Code	Size (Inches)	Product Code	Size (Inches)	Product Code	Size (Inches)
2-608	1/4	2-618	9/16	2-628	7/8
2-610	5/16	2-620	5/8	2-630	15/16
2-612	3/8	2-622	11/16	2-632	1
2-614	7/16	2-624	3/4		
2-616	1/2	2-626	13/16		

WS-2-13

Features
- SUPERTORQUE® lobular openings for greater turning power without deforming the fastener.
- Designed for maximum engagement on 6 point fasteners.
- Suitable for use with pneumatic and electric impact wrenches.
- Specially heat treated for impact use to provide long life, safety, and durability.

Made in U.S.A.

WILLIAMS®

3/8" DRIVE UNIVERSAL IMPACT SOCKETS, 6 POINT, SAE

Black Industrial Finish

Product Code	Size (Inches)	A OAL (Inches)	B Drive End Diameter (Inches)	C Working End Diameter (Inches)	D Broach Depth (Inches)	E Bolt Clearance Depth (Inches)	Bolt Clearance Diameter (Inches)	F Nose Length (Inches)
36212	3/8	2 1/4	1	19/16	6/16	8/16	5/16	15/16
36214	7/16	2 1/4	1	11/16	9/16	8/16	9/16	15/16
36216	1/2	2 1/3	1	13/16	6/16	9/16	7/16	1 1/16
36218	9/16	2 1/3	1	13/16	6/16	9/16	8/16	1 1/16
36220	5/8	2 1/3	1	14/16	6/16	9/16	9/16	1 1/16
36222	11/16	2 5/8	1	1	8/16	11/16	10/16	1 4/16
36224	3/4	2 5/8	1	1 2/16	8/16	11/16	11/16	1 4/16

Fed. Spec: ANSI B107.2

36224

36912 7 Piece 3/8" Drive Universal 6 Point Impact Socket Set on Clip Rail

Contents Include:

Product Code	Size (Inches)	Product Code	Size (Inches)
36212	3/8	36220	5/8
36214	7/16	36222	11/16
36216	1/2	36224	3/4
36218	9/16		

36912

Features
- SUPERTORQUE® lobular openings for greater turning power without deforming the fastener
- Designed for maximum engagement on 6 point fasteners
- Suitable for use with pneumatic and electric impact wrenches
- Specially heat treated for impact use to provide long life, safety, and durability
- Drive end features pin retention hole and groove

WILLIAMS®

3/8" DRIVE SHALLOW IMPACT SOCKETS, 6 POINT, SAE

Black Industrial Finish

Product Code	Size (Inches)	A OAL (Inches)	B Drive End Diameter (Inches)	C Working End Diameter (Inches)	D Broach Depth (Inches)	E Bolt Clearance Depth (Inches)	E Bolt Clearance Diameter (Inches)	F Nose Length (Inches)
36108	1/4	1 5/32	3/4	7/16	5/16	21/32	7/32	7/16
36110	5/16	1	3/4	1/2	3/8	17/32	1/4	7/16
36112	3/8	1	3/4	19/32	11/32	17/32	9/32	7/16
36114	7/16	1 3/32	3/4	11/16	3/8	5/8	13/32	7/16
36116	1/2	1 5/32	25/32	25/32	3/8	5/8	7/16	-
36118	9/16	1 1/16	13/16	13/16	9/16	23/32	17/32	-
36120	5/8	1 1/16	15/16	15/16	9/16	23/32	5/8	-
36122	11/16	1 1/16	15/16	15/16	9/16	3/4	21/32	-
36124	3/4	1 1/8	1 1/32	1 1/32	19/32	13/16	23/32	-

Fed. Spec: ANSI B107.2

36902 9 Piece 3/8" Drive Shallow 6 Point Impact Socket Set on Clip Rail

Contents Include:

Product Code	Size (Inches)	Product Code	Size (Inches)	Product Code	Size (Inches)
36108	1/4	36114	7/16	36120	5/8
36110	5/16	36116	1/2	36122	11/16
36112	3/8	36118	9/16	36124	3/4

Features

- SUPERTORQUE® lobular openings for greater turning power without deforming the fastener.
- Designed for maximum engagement on 6 point fasteners.
- Suitable for use with pneumatic and electric impact wrenches.
- Specially heat treated for impact use to provide long life, safety, and durability.
- Drive end features pin retention hole and groove.

WILLIAMS®

3/8" DRIVE DEEP IMPACT SOCKETS, 6 POINT, SAE

Black Industrial Finish

Product Code	Size (Inches)	A OAL (Inches)	B Drive End Diameter (Inches)	C WorkingEnd Diameter (Inches)	D Broach Depth (Inches)	E Bolt Clearance Depth (Inches)	E Bolt Clearance Diameter (Inches)	F Nose Length (Inches)
12-610	5/16	2 1/8	11/16	1/2	1/4	1 21/32	9/32	1 5/8
12-612	3/8	2 1/8	11/16	5/8	9/32	1 5/8	11/32	1 5/8
12-614	7/16	2 1/8	11/16	21/32	11/32	1 5/8	11/32	1 5/8
12-616	1/2	2 1/8	3/4	3/4	3/8	1 15/32	7/16	-
12-618	9/16	2 3/8	13/16	13/16	7/16	1 1/2	17/32	-
12-620	5/8	2 3/8	29/32	29/32	15/32	1 1/2	5/8	-
12-622	11/16	2 5/8	31/32	31/32	1/2	1 19/32	21/32	-
12-624	3/4	2 5/8	1 1/16	1 1/16	9/16	1 19/32	23/32	-
12-626	13/16	2 3/4	1 1/8	1 1/8	9/16	1 25/32	25/32	-
12-628	7/8	2 3/4	1 3/16	1 3/16	19/32	1 7/8	27/32	-
12-630	15/16	2 3/4	1 9/32	1 9/32	19/32	1 15/16	29/32	-
12-632	1	2 3/4	1 11/32	1 11/32	5/8	2	1	-

Fed. Spec: ANSI B107.2

WS-12-8 8 Piece 3/8" Drive Deep 6 Point Impact Socket Set on Clip Rail

Contents Include:

Product Code	Size (Inches)	Product Code	Size (Inches)	Product Code	Size (Inches)
12-610	5/16	12-616	1/2	12-622	11/16
12-612	3/8	12-618	9/16	12-624	3/4
12-614	7/16	12-620	5/8		

WS-12-12 12 Piece 3/8" Drive Deep 6 Point Impact Socket Set on Clip Rail

Contents Include:

Product Code	Size (Inches)	Product Code	Size (Inches)	Product Code	Size (Inches)
12-610	5/16	12-618	9/16	12-626	13/16
12-612	3/8	12-620	5/8	12-628	7/8
12-614	7/16	12-622	11/16	12-630	15/16
12-616	1/2	12-624	3/4	12-632	1

Features

- SUPERTORQUE® lobular openings for greater turning power without deforming the fastener.
- Designed for maximum engagement on 6 point fasteners.
- Suitable for use with pneumatic and electric impact wrenches.
- Specially heat treated for impact use to provide long life, safety, and durability.

Made in U.S.A.

WILLIAMS®

3/8" DRIVE DEEP IMPACT SOCKETS, 6 POINT, SAE

Black Industrial Finish

Product Code	Size (Inches)	A OAL (Inches)	B Drive End Diameter (Inches)	C Working End Diameter (Inches)	D Broach Depth (Inches)	E Bolt Clearance Depth (Inches)	Bolt Clearance Diameter (Inches)	F Nose Length (Inches)
36308	1/4	2 1/2	3/4	7/16	9/16	1 9/16	7/32	7/16
36310	5/16	2 1/2	3/4	1/2	21/32	1 23/32	9/32	7/16
36312	3/8	2 1/2	3/4	19/32	1 1/16	1 15/16	5/16	7/16
36314	7/16	2 1/2	3/4	21/32	1	1 29/32	13/32	7/16
36316	1/2	2 1/2	25/32	25/32	1 1/16	1 31/32	7/16	-
36318	9/16	2 1/2	13/16	13/16	1 1/16	1 31/32	17/32	-
36320	5/8	2 1/2	29/32	29/32	1 1/16	1 31/32	19/32	-
36322	11/16	2 1/2	15/16	15/16	1	1 31/32	21/32	-
36324	3/4	2 1/2	1 1/32	1 1/32	1 1/32	2	23/32	-

Fed. Spec: ANSI B107.2

36316 36308

36904 9 Piece 3/8" Drive Deep 6 Point Impact Socket Set on Clip Rail
Contents Include:

Product Code	Size (Inches)	Product Code	Size (Inches)	Product Code	Size (Inches)
36308	1/4	36314	7/16	36320	5/8
36310	5/16	36316	1/2	36322	11/16
36312	3/8	36318	9/16	36324	3/4

36904

Features

- SUPERTORQUE® lobular openings for greater turning power without deforming the fastener.
- Designed for maximum engagement on 6 point fasteners.
- Suitable for use with pneumatic and electric impact wrenches.
- Specially heat treated for impact use to provide long life, safety, and durability.
- Drive end features pin retention hole and groove.

WILLIAMS®

3/8" DRIVE SHALLOW IMPACT SOCKETS, 6 POINT, METRIC

Black Industrial Finish

Product Code	Size (MM)	A OAL (Inches)	B Drive End Diameter (Inches)	C Working End Diameter (Inches)	D Broach Depth (Inches)	E Bolt Clearance Depth (Inches)	Bolt Clearance Diameter (Inches)	F Nose Length (Inches)
2M-607	7	1 1/32	11/16	7/16	7/32	9/16	1/4	17/32
2M-608	8	1 1/32	11/16	1/2	1/4	9/16	9/32	17/32
2M-609	9	1 1/32	11/16	9/16	9/32	9/16	11/32	17/32
2M-610	10	1 1/32	11/16	5/8	9/32	9/16	11/32	17/32
2M-611	11	1 1/32	11/16	21/32	9/32	19/32	11/32	9/16
2M-612	12	1 1/16	23/32	23/32	9/32	9/16	11/32	-
2M-613	13	1 1/16	25/32	25/32	9/32	19/32	3/8	-
2M-614	14	1 3/32	13/16	13/16	9/16	19/32	1/2	-
2M-615	15	1 3/32	27/32	27/32	9/16	19/32	9/16	-
2M-616	16	1 1/8	29/32	29/32	19/32	5/8	19/32	-
2M-617	17	1 5/32	31/32	31/32	19/32	5/8	5/8	-
2M-618	18	1 5/32	1	1	5/8	21/32	11/16	-
2M-619	19	1 3/16	1 1/16	1 1/16	21/32	11/16	23/32	-

2M-614 2M-607

MS-2-13H 13 Piece 3/8" Drive Shallow 6 Point Impact Socket Set on Clip Rail
Contents Include:

Product Code	Size (MM)	Product Code	Size (MM)	Product Code	Size (MM)
2M-607	7	2M-612	12	2M-617	17
2M-608	8	2M-613	13	2M-618	18
2M-609	9	2M-614	14	2M-619	19
2M-610	10	2M-615	15		
2M-611	11	2M-616	16		

MS-2-13H

Features

- SUPERTORQUE® lobular openings for greater turning power without deforming the fastener.
- Designed for maximum engagement on 6 point fasteners.
- Suitable for use with pneumatic and electric impact wrenches.
- Specially heat treated for impact use to provide long life, safety, and durability.

Made in U.S.A.

WILLIAMS®

6 M

3/8" DRIVE SHALLOW IMPACT SOCKETS, 6 POINT, METRIC

Black Industrial Finish

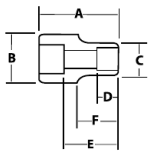

36515 36507

Product Code	Size (MM)	A OAL (Inches)	B Drive End Diameter (Inches)	C Working End Diameter (Inches)	D Broach Depth (Inches)	E Bolt Clearance Depth (Inches)	Bolt Clearance Diameter (Inches)	F Nose Length (Inches)
36507	7	1	3/4	7/16	9/32	17/32	1/4	7/16
36508	8	1	3/4	1/2	5/16	17/32	9/32	7/16
36509	9	1	3/4	1/2	5/16	17/32	11/32	7/16
36510	10	1	3/4	5/8	11/32	17/32	11/32	7/16
36511	11	1	3/4	11/16	11/32	17/32	11/32	7/16
36512	12	1	3/4	23/32	3/8	21/32	11/32	7/16
36513	13	1	7/8	13/16	5/16	1/2	3/8	7/16
36514	14	1 1/16	7/8	13/16	17/32	21/32	1/2	7/16
36515	15	1 1/16	7/8	7/8	9/16	11/16	9/16	-
36516	16	1 1/16	15/16	15/16	9/16	11/16	19/32	-
36517	17	1 1/16	15/16	15/16	9/16	23/32	5/8	-
36518	18	1 1/16	1 1/16	1 1/16	19/32	23/32	11/16	-
36519	19	1 5/32	1 1/16	1 1/16	9/16	3/4	23/32	-

36906 10 Piece 3/8" Drive Shallow 6 Point Impact Socket Set on Clip Rail

36906

Contents Include:

Product Code	Size (MM)	Product Code	Size (MM)	Product Code	Size (MM)
36510	10	36514	14	36518	18
36511	11	36515	15	36519	19
36512	12	36516	16		
36513	13	36517	17		

Features

- SUPERTORQUE® lobular openings for greater turning power without deforming the fastener.
- Designed for maximum engagement on 6 point fasteners.
- Suitable for use with pneumatic and electric impact wrenches.
- Specially heat treated for impact use to provide long life, safety, and durability.
- Drive end features pin retention hole and groove.

WILLIAMS®

6 M

3/8" DRIVE UNIVERSAL IMPACT SOCKETS, 6 POINT, METRIC

Black Industrial Finish

36819

Product Code	Size (MM)	A OAL (Inches)	B Drive End Diameter (Inches)	C Working End Diameter (Inches)	D Broach Depth (Inches)	E Bolt Clearance Depth (Inches)	Bolt Clearance Diameter (Inches)	F Nose Length (Inches)
36810	10	2 1/4	7/8	5/8	3/8	1/2	5/16	15/16
36811	11	2 1/4	7/8	11/16	1/2	1/2	3/8	15/16
36812	12	2 1/4	7/8	11/16	1/2	1/2	3/8	15/16
36813	13	3/8	7/8	13/16	1/2	9/16	3/8	1 1/16
36814	14	3/8	7/8	13/16	1/2	9/16	1/2	1 1/16
36815	15	3/8	7/8	7/8	1/2	9/16	9/16	1 1/16
36816	16	3/8	7/8	7/8	1/2	9/16	9/16	1 1/16
36817	17	3/8	7/8	1	1/2	11/16	5/8	1 1/4
36818	18	2 5/8	7/8	1 1/16	1/2	11/16	11/16	1 1/4
36819	19	2 5/8	7/8	1/8	1/2	11/16	11/16	1 1/4

36910 10 Piece 3/8" Drive Universal 6 Point Impact Socket Set on Clip Rail

36910

Contents Include:

Product Code	Size (MM)	Product Code	Size (MM)	Product Code	Size (MM)
36810	10	36814	14	36818	18
36811	11	36815	15	36819	19
36812	12	36816	16		
36813	13	36817	17		

Features

- SUPERTORQUE® lobular openings for greater turning power without deforming the fastener
- Designed for maximum engagement on 6 point fasteners
- Suitable for use with pneumatic and electric impact wrenches
- Specially heat treated for impact use to provide long life, safety, and durability
- Drive end features pin retention hole and groove

WILLIAMS®

3/8" DRIVE DEEP IMPACT SOCKETS, 6 POINT, METRIC

Black Industrial Finish

Product Code	Size (MM)	A OAL (Inches)	B Drive End Diameter (Inches)	C Working End Diameter (Inches)	D Broach Depth (Inches)	E Bolt Clearance Depth (Inches)	Bolt Clearance Diameter (Inches)	F Nose Length (Inches)
12M-607	7	2 1/8	11/16	7/16	9/32	1 11/16	1/4	1 5/8
12M-608	8	2 1/8	11/16	1/2	1/4	1 11/16	9/32	1 5/8
12M-609	9	2 1/8	11/16	9/16	9/32	1 11/16	11/32	1 5/8
12M-610	10	2 1/8	11/16	5/8	9/32	1 11/16	11/32	1 5/8
12M-611	11	2 1/8	11/16	21/32	21/64	1 11/16	11/32	1 5/8
12M-612	12	2 1/8	23/32	23/32	3/8	1 23/32	7/16	-
12M-613	13	2 1/8	25/32	25/32	7/16	1 3/8	15/32	-
12M-614	14	2 3/8	13/16	13/16	13/32	1 9/16	1/2	-
12M-615	15	2 3/8	27/32	27/32	13/32	1 9/16	9/16	-
12M-616	16	2 3/8	29/32	29/32	13/32	1 9/16	19/32	-
12M-617	17	2 5/8	31/32	31/32	7/16	1 3/4	5/8	-
12M-618	18	2 5/8	1	1	7/16	1 3/4	11/16	-
12M-619	19	2 5/8	1 1/16	1 1/16	9/16	1 3/4	23/32	-
12M-620	20	2 5/8	1 1/8	1 1/8	15/32	1 3/4	3/4	-
12M-621	21	2 5/8	1 5/32	1 5/32	1/2	1 3/4	25/32	-
12M-622	22	2 7/8	1 3/16	1 3/16	1/2	1 31/32	27/32	-
12M-623	23	2 7/8	1 1/4	1 1/4	17/32	1 31/32	7/8	-
12M-624	24	2 7/8	1 5/16	1 5/16	19/32	1 31/32	29/32	-

12M-614 12M-607

MS-12-13H 13 Piece 3/8" Drive Deep 6 Point Impact Socket Set on Clip Rail

Contents Include:

Product Code	Size (MM)	Product Code	Size (MM)	Product Code	Size (MM)
12M-607	7	12M-612	12	12M-617	17
12M-608	8	12M-613	13	12M-618	18
12M-609	9	12M-614	14	12M-619	19
12M-610	10	12M-615	15		
12M-611	11	12M-616	16		

MS-12-18H 18 Piece 3/8" Drive Deep 6 Point Impact Socket Set on Clip Rail

Contents Include:

Product Code	Size (MM)	Product Code	Size (MM)	Product Code	Size (MM)
12M-607	7	12M-613	13	12M-619	19
12M-608	8	12M-614	14	12M-620	20
12M-609	9	12M-615	15	12M-621	21
12M-610	10	12M-616	16	12M-622	22
12M-611	11	12M-617	17	12M-623	23
12M-612	12	12M-618	18	12M-624	24

Features

Made in U.S.A.

- SUPERTORQUE® lobular openings for greater turning power without deforming the fastener.
- Designed for maximum engagement on 6 point fasteners.
- Suitable for use with pneumatic and electric impact wrenches.
- Specially heat treated for impact use to provide long life, safety, and durability.

MS-12-13H

MS-12-18H

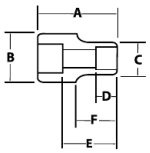

36714 36707

36908

35624

36914

35605

36918

WILLIAMS

6 M

3/8" DRIVE DEEP IMPACT SOCKETS, 6 POINT, METRIC

Black Industrial Finish

		A	B	C	D	E		F
Product Code	Size (MM)	OAL (Inches)	Drive End Diameter (Inches)	Working End Diameter (Inches)	Broach Depth (Inches)	Bolt Clearance Depth (Inches)	Bolt Clearance Diameter (Inches)	Nose Length (Inches)
36707	7	2 1/2	3/4	7/16	15/32	1 23/32	1/4	7/16
36708	8	2 1/2	3/4	1/2	9/16	1 23/32	9/32	7/16
36709	9	2 1/2	3/4	1/2	19/32	1 23/32	5/16	7/16
36710	10	2 1/2	3/4	5/8	1	1 23/32	3/8	7/16
36711	11	2 1/2	3/4	21/32	1 1/16	1 23/32	13/32	7/16
36712	12	2 1/2	3/4	23/32	1	1 23/32	7/16	7/16
36713	13	2 1/2	7/8	25/32	1 3/16	2	1/2	7/16
36714	14	2 1/2	7/8	13/16	1 1/32	2	17/32	-
36715	15	2 1/2	7/8	7/8	1 1/16	2	9/16	-
36716	16	2 1/2	15/16	15/16	1 1/32	2	19/32	-
36717	17	2 1/2	15/16	15/16	1 1/32	2	21/32	-
36718	18	2 1/2	1	1	1	2	11/16	-
36719	19	2 1/2	1 1/16	1 1/16	1	2	23/32	-

36908 10 Piece 3/8" Drive Deep 6 Point Impact Socket Set on Clip Rail

Contents Include:

Product Code	Size (MM)	Product Code	Size (MM)	Product Code	Size (MM)
36710	10	36714	14	36718	18
36711	11	36715	15	36719	19
36712	12	36716	16		
36713	13	36717	17		

Features

- SUPERTORQUE® lobular openings for greater turning power without deforming the fastener.
- Designed for maximum engagement on 6 point fasteners.
- Suitable for use with pneumatic and electric impact wrenches.
- Specially heat treated for impact use to provide long life, safety, and durability.
- Drive end features pin retention hole and groove.

WILLIAMS

6 F

3/8" DRIVE ONE PIECE IMPACT HEX BIT STUBBY DRIVERS, SAE

Black Industrial Finish

Product Code	Size (inches)	OAL (Inches)	Product Code	Size (inches)	OAL (Inches)
35620	1/8	1 1/8	35628	1/4	1 1/8
35622	5/32	1 1/8	35630	5/16	1 1/8
35624	3/16	1 1/8	35632	3/8	1 1/8
35626	7/32	1 1/8			

Fed. Spec: ANSI B107.2

36914 7 Piece 3/8" Drive One Piece Impact Hex Bit Stubby Drivers, SAE

Contents Include:

Product Code	Size (Inches)	Product Code	Size (Inches)	Product Code	Size (Inches)
35620	1/8	35626	7/32	35632	3/8
35622	5/32	35628	1/4		
35624	3/16	35630	5/16		

WILLIAMS

6 M

3/8" DRIVE ONE PIECE IMPACT HEX BIT STUBBY DRIVERS, MM

Black Industrial Finish

Product Code	Size (inches)	OAL (Inches)	Product Code	Size (inches)	OAL (Inches)
35604	4	1 1/8	35608	8	1 1/8
35605	5	1 1/8	35610	10	1 1/8
35606	6	1 1/8			

Fed. Spec: ANSI B107.2

36918 5 Piece 3/8" Drive One Piece Impact Hex Bit Stubby Drivers, MM

Contents Include:

Product Code	Size (MM)	Product Code	Size (MM)	Product Code	Size (MM)
35604	4	35606	6	35610	10
35605	5	35608	8		

WILLIAMS

57 PIECE 1/2" DRIVE SOCKET AND DRIVE TOOL SET

8 & 12 Point SAE, with Metal Box

Product Code	Description
WSS-57TB	57 Piece Tool Set with TB-6124A Metal Tool Box
WSS-57F	57 Piece Tool Set Only

WSS-57TB

Contents Include:

Drive Tools:

Product Code	Description
S-15A	18" Speeder Handle
S-20A	12" Sliding T-Handle
S-40AA	10 13/16" Flex Handle
S-41AA	15 1/2" Flex Handle
S-52EHA	10 3/8" Enclosed Head Ratchet
S-52EHLA	15" Enclosed Head Ratchet

Shallow 12-Point Sockets

Product Code	Size (Inches)
ST-1212	3/8
ST-1214	7/16
ST-1216	1/2
ST-1218	9/16
ST-1220	5/8
ST-1222	11/16
ST-1224	3/4
ST-1226	13/16
ST-1228	7/8
ST-1230	15/16
ST-1232	1
ST-1234	1 1/16
ST-1236	1 1/8
ST-1238	1 3/16
ST-1240	1 1/4
ST-1242	1 5/16
ST-1244	1 3/8
ST-1246	1 7/16
ST-1248	1 1/2

Standard Hex Bit Sockets

Product Code	Size (Inches)
SA-8A	1/4
SA-10A	5/16
SA-12A	3/8
SA-16A	1/2
SA-18A	9/16
SA-20A	5/8

Drive Tools:

Product Code	Description
S-70	Ratchet Spinner Disk
S-102P	2" Extension
S-110P	5" Extension
S-115P	10" Extension
S-140A	Universal Joint

Deep 12-Point Sockets

Product Code	Size (Inches)
SD-1216	1/2
SD-1218	9/16
SD-1220	5/8
SD-1222	11/16
SD-1224	3/4
SD-1226	13/16
SD-1228	7/8
SD-1230	15/16
SD-1232	1
SD-1234	1 1/16
SD-1236	1 1/8

Shallow 8-Point Sockets

Product Code	Size (Inches)
ST-812	3/8
ST-814	7/16
ST-816	1/2
ST-818	9/16
ST-820	5/8
ST-822	11/16
ST-824	3/4
ST-826	13/16
ST-828	7/8
ST-832	1

TB-6124A

Features

Made in U.S.A.

- All tools are professional quality, made of high-grade chrome vanadium steel.
- Sockets feature SUPERTORQUE® lobular openings for greater turning power without deforming the fastener.
- Metal tool box made for years of rugged use.

WILLIAMS

38 PIECE 1/2" DRIVE SOCKET AND DRIVE TOOL SET

WSS-38TB

Features
- All tools are professional quality, made of high-grade chrome vanadium steel.
- Sockets feature SUPERTORQUE® lobular openings for greater turning power without deforming the fastener.
- Metal tool box made for years of rugged use.

12 Point SAE, with Metal Box

Product Code	Description
WSS-38TB	38 Piece Tool Set with TB-104 Metal Tool Box (Keep Safe Foam Not Included)
WSS-38F	38 Piece Tool Set Only - Packed in Keep Safe Foam System

Contents Include:

Drive Tools:

Product Code	Description
S-15A	18" Speeder Handle
S-41AA	15 ½" Flex Handle
S-52EHA	10 3/8" Enclosed Head Ratchet
S-70	Ratchet Spinner Disk

Drive Tools:

Product Code	Description
S-140A	Universal Joint
S-102P	2" Extension
S-110P	5" Extension
S-115P	10" Extension

Shallow 12-Point Sockets

Product Code	Size (Inches)
ST-1212	3/8
ST-1214	7/16
ST-1216	1/2
ST-1218	9/16
ST-1220	5/8
ST-1222	11/16
ST-1224	3/4
ST-1226	13/16
ST-1228	7/8
ST-1230	15/16
ST-1232	1
ST-1234	1 1/16
ST-1236	1 1/8
ST-1238	1 3/16
ST-1240	1 1/4
ST-1242	1 5/16

Shallow 12-Point Sockets

Product Code	Size (Inches)
ST-1244	1 3/8
ST-1246	1 7/16
ST-1248	1 1/2

Deep 12-Point Sockets

Product Code	Size (Inches)
SD-1216	1/2
SD-1218	9/16
SD-1220	5/8
SD-1222	11/16
SD-1224	3/4
SD-1226	13/16
SD-1228	7/8
SD-1230	15/16
SD-1232	1
SD-1234	1 1/16
SD-1236	1 1/8

Made in U.S.A.

WILLIAMS

30 PIECE 1/2" DRIVE SOCKET AND DRIVE TOOL SET

WSS-30TB

Features
- Keep-Safe-Foam system keeps tools organized and helps prevent loss
- All tools are professional quality, made of high-grade chrome vanadium steel
- Sockets feature SUPERTORQUE® lobular openings for greater turning power without deforming the fastener
- Metal tool box made for years of rugged use.

12 Point SAE, with Metal Box

Product Code	Description
WSS-30TB	30 Piece Tool Set with TB-104 Metal Tool Box (Keep Safe Foam Not Included)
WSS-30F	30 Piece Tool Set Only - Packed in Keep Safe Foam System

Contents Include:

Drive Tools:

Product Code	Description
S-41AA	15 ½" Flex Handle
S-52EHA	10 3/8" Enclosed Head Ratchet
S-140A	Universal Joint

Drive Tools:

Product Code	Description
S-110P	5" Extension
S-115P	10" Extension

Shallow 12-Point Sockets

Product Code	Size (Inches)
ST-1212	3/8
ST-1214	7/16
ST-1216	1/2
ST-1218	9/16
ST-1220	5/8
ST-1222	11/16
ST-1224	3/4
ST-1226	13/16
ST-1228	7/8
ST-1230	15/16
ST-1232	1
ST-1234	1 1/16
ST-1236	1 1/8
ST-1240	1 1/4

Deep 12-Point Sockets

Product Code	Size (Inches)
SD-1216	1/2
SD-1218	9/16
SD-1220	5/8
SD-1222	11/16
SD-1224	3/4
SD-1226	13/16
SD-1228	7/8
SD-1230	15/16
SD-1232	1
SD-1234	1 1/16
SD-1236	1 1/8

Made in U.S.A.

WILLIAMS

22 PIECE 1/2" DRIVE SOCKET AND DRIVE TOOL SET

12 Point SAE, Packed in Exclusive Keep-Safe-Foam System with Metal Box

Product Code	Description
WSS-22FTB	22 Piece Tool Set with TB-104 Metal Tool Box
WSS-22F	22 Piece Tool Set Only - Packed in Keep Safe Foam System

Contents Include:

Drive Tools:

Product Code	Description
S-15A	18" Speeder Handle
S-41AA	15 ½" Flex Handle
S-52EHA	10 3/8" Enclosed Head Ratchet
S-140A	Universal Joint

Drive Tools:

Product Code	Description
S-102P	2" Extension
S-110P	5" Extension
S-115P	10" Extension

Shallow 12-Point Sockets

Product Code	Size (Inches)
ST-1212	3/8
ST-1214	7/16
ST-1216	1/2
ST-1218	9/16
ST-1220	5/8
ST-1222	11/16
ST-1224	3/4
ST-1226	13/16

Shallow 12-Point Sockets

Product Code	Size (Inches)
ST-1228	7/8
ST-1230	15/16
ST-1232	1
ST-1234	1 1/16
ST-1236	1 1/8
ST-1238	1 3/16
ST-1240	1 1/4

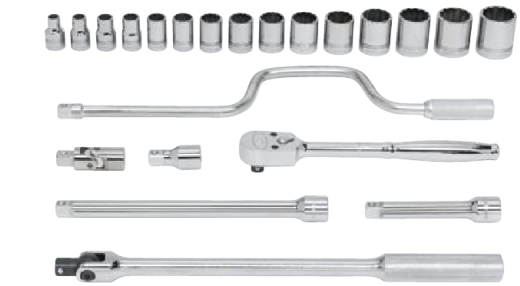

WSS-22FTB

Features

Made in U.S.A.

- Keep-Safe-Foam system keeps tools organized and helps prevent loss.
- All tools are professional quality, made of high-grade chrome vanadium steel.
- Sockets feature SUPERTORQUE® lobular openings for greater turning power without deforming the fastener.
- Metal tool box made for years of rugged use.

WILLIAMS

19 PIECE 1/2" DRIVE SOCKET AND DRIVE TOOL SET

12 Point SAE, Packed in Exclusive Keep-Safe-Foam System with Metal Box

Product Code	Description
WSS-19FTB	19 Piece Tool Set with TB-103 Metal Tool Box
WSS-19F	19 Piece Tool Set Only - Packed in Keep Safe Foam System

Contents Include:

Drive Tools:

Product Code	Description
S-41AA	15 ½" Flex Handle
S-52EHA	10 3/8" Enclosed Head Ratchet

Drive Tools:

Product Code	Description
S-110P	5" Extension
S-140A	Universal Joint

Shallow 12-Point Sockets

Product Code	Size (Inches)
ST-1212	3/8
ST-1214	7/16
ST-1216	1/2
ST-1218	9/16
ST-1220	5/8
ST-1222	11/16
ST-1224	3/4
ST-1226	13/16

Shallow 12-Point Sockets

Product Code	Size (Inches)
ST-1228	7/8
ST-1230	15/16
ST-1232	1
ST-1234	1 1/16
ST-1236	1 1/8
ST-1238	1 3/16
ST-1240	1 1/4

WSS-19FTB

Features

Made in U.S.A.

- Keep-Safe-Foam system keeps tools organized and helps prevent loss.
- All tools are professional quality, made of high-grade chrome vanadium steel.
- Sockets feature SUPERTORQUE® lobular openings for greater turning power without deforming the fastener.
- Metal tool box made for years of rugged use.

WSS-18HFTB

WILLIAMS

18 PIECE 1/2" DRIVE SOCKET AND DRIVE TOOL SET

6 Point SAE, Packed in Exclusive Keep-Safe-Foam System with Metal Box

Product Code	Description
WSS-18HFTB	18 Piece Tool Set with TB-103 Metal Tool Box
WSS-18HF	18 Piece Tool Set Only - Packed in Keep Safe Foam System

Contents Include:

Drive Tools:

Product Code	Description
S-41AA	15 ½" Flex Handle
S-52EHA	10 3⁄8" Enclosed Head Ratchet

Drive Tools:

Product Code	Description
S-110P	5" Extension
S-140A	Universal Joint

Shallow 6-Point Sockets

Product Code	Size (Inches)
ST-612	3⁄8
ST-614	7⁄16
ST-616	1⁄2
ST-618	9⁄16
ST-620	5⁄8
ST-622	11⁄16
ST-624	3⁄4

Shallow 6-Point Sockets

Product Code	Size (Inches)
ST-626	13⁄16
ST-628	7⁄8
ST-630	15⁄16
ST-632	1
ST-634	1 1⁄16
ST-636	1 1⁄8
ST-640	1 1⁄4

Features

Made in U.S.A.

- Keep-Safe-Foam system keeps tools organized and helps prevent loss.
- All tools are professional quality, made of high-grade chrome vanadium steel.
- Sockets feature SUPERTORQUE® lobular openings for greater turning power without deforming the fastener.
- Metal tool box made for years of rugged use.

WSS-15FTB

WILLIAMS

15 PIECE 1/2" DRIVE SOCKET AND DRIVE TOOL SET

12 Point SAE, Packed in Exclusive Keep-Safe-Foam System with Metal Box

Product Code	Description
WSS-15FTB	15 Piece Tool Set with TB-103 Metal Tool Box
WSS-15F	15 Piece Tool Set Only - Packed in Keep Safe Foam System

Contents Include:

Drive Tools:

Product Code	Description
S-41AA	15 ½" Flex Handle
S-52EHA	10 3⁄8" Enclosed Head Ratchet
S-110P	5" Extension
S-115P	10" Extension
S-140A	Universal Joint

Shallow 12-Point Sockets

Product Code	Size (Inches)
ST-1214	7⁄16
ST-1216	1⁄2
ST-1218	9⁄16
ST-1220	5⁄8
ST-1222	11⁄16
ST-1224	3⁄4
ST-1226	13⁄16
ST-1228	7⁄8
ST-1230	15⁄16
ST-1232	1

Features

Made in U.S.A.

- Keep-Safe-Foam system keeps tools organized and helps prevent loss.
- All tools are professional quality, made of high-grade chrome vanadium steel.
- Sockets feature SUPERTORQUE® lobular openings for greater turning power without deforming the fastener.
- Metal tool box made for years of rugged use.

WILLIAMS®

12 M

47 PIECE 1/2" DRIVE SOCKET AND DRIVE TOOL SET

12 Point Metric, with Metal Box

Product Code	Description
MSS-47TB	47 Piece Tool Set with TB-6124A Metal Tool Box (Keep Safe Foam Not Included)
MSS-47F	47 Piece Tool Set Only - Packed in Keep Safe Foam System

Contents Include:

Drive Tools:

Product Code	Description
S-15A	18" Speeder Handle
S-20A	12" Sliding T-Handle
S-40AA	10 13/16" Flex Handle
S-41AA	15 1/2" Flex Handle
S-52EHA	10 3/8" Enclosed Head Ratchet
S-60D	Stud Remover
S-70	Ratchet Spinner Disk
S-102P	2" Extension
S-110P	5" Extension
S-115P	10" Extension
S-140A	Universal Joint

Deep 12-Point Sockets

Product Code	Size (MM)
SMD-1213	13
SMD-1214	14
SMD-1215	15
SMD-1216	16
SMD-1217	17
SMD-1218	18
SMD-1219	19
SMD-1221	21
SMD-1222	22
SMD-1224	24
SMD-1227	27
SMD-1230	30

Shallow 12-Point Sockets

Product Code	Size (MM)
STM-1210	10
STM-1211	11
STM-1212	12
STM-1213	13
STM-1214	14
STM-1215	15
STM-1216	16
STM-1217	17
STM-1218	18
STM-1219	19
STM-1220	20
STM-1221	21
STM-1222	22
STM-1223	23
STM-1224	24
STM-1225	25
STM-1226	26
STM-1227	27
STM-1228	28
STM-1229	29
STM-1230	30
STM-1232	32
STM-1234	34
STM-1236	36

Made in U.S.A.

MSS-47TB

Features

- All tools are professional quality, made of high-grade chrome vanadium steel
- Sockets feature SUPERTORQUE® lobular openings for greater turning power without deforming the fastener.
- Metal tool box made for years of rugged use.

WILLIAMS®

12 M

33 PIECE 1/2" DRIVE SOCKET AND DRIVE TOOL SET

12 Point Metric, with Metal Box

Product Code	Description
MSS-33TB	33 Piece Tool Set with TB-104 Metal Tool Box (Keep Safe Foam Not Included)
MSS-33F	33 Piece Tool Set Only - Packed in Keep Safe Foam System

Contents Include:

Drive Tools:

Product Code	Description
S-41AA	15 1/2" Flex Handle
S-52EHA	10 3/8" Enclosed Head Ratchet
S-102P	2" Extension
S-110P	5" Extension
S-115P	10" Extension
S-140A	Universal Joint

Deep 12-Point Sockets

Product Code	Size (MM)
SMD-1213	13
SMD-1214	14
SMD-1215	15
SMD-1216	16
SMD-1217	17
SMD-1218	18
SMD-1219	19
SMD-1221	21
SMD-1222	22
SMD-1224	24
SMD-1227	27
SMD-1230	30

Shallow 12-Point Sockets

Product Code	Size (MM)
STM-1210	10
STM-1211	11
STM-1212	12
STM-1213	13
STM-1214	14
STM-1215	15
STM-1216	16
STM-1217	17
STM-1218	18
STM-1219	19
STM-1220	20
STM-1221	21
STM-1222	22
STM-1223	23
STM-1224	24

Made in U.S.A.

MSS-33TB

Features

- All tools are professional quality, made of high-grade chrome vanadium steel.
- Sockets feature SUPERTORQUE® lobular openings for greater turning power without deforming the fastener.
- Metal tool box made for years of rugged use.

MSS-29FTB

WILLIAMS

12 M

29 PIECE 1/2" DRIVE SOCKET AND DRIVE TOOL SET

12 Point Metric, Packed in Exclusive Keep-Safe-Foam System with Metal Box

Product Code	Description
MSS-29FTB	29 Piece Tool Set with TB-104 Metal Box
MSS-29F	29 Piece Tool Set Only - Packed in Keep Safe Foam System

Contents Include:

Drive Tools:

Product Code	Description
S-41AA	15 ½" Flex Handle
S-52EHA	10 3/8" Enclosed Head Ratchet
S-102P	2" Extension

Drive Tools:

Product Code	Description
S-110P	5" Extension
S-115P	10" Extension
S-140A	Universal Joint

Shallow 12-Point Sockets

Product Code	Size (MM)
STM-1210	10
STM-1211	11
STM-1212	12
STM-1213	13
STM-1214	14
STM-1215	15
STM-1216	16
STM-1217	17
STM-1218	18
STM-1219	19
STM-1220	20
STM-1221	21

Shallow 12-Point Sockets

Product Code	Size (MM)
STM-1222	22
STM-1223	23
STM-1224	24
STM-1225	25
STM-1226	26
STM-1227	27
STM-1228	28
STM-1229	29
STM-1230	30
STM-1232	32
STM-1234	34

Features

Made in U.S.A.

- Keep-Safe-Foam system keeps tools organized and helps prevent loss.
- All tools are professional quality, made of high-grade chrome vanadium steel.
- Sockets feature SUPERTORQUE® lobular openings for greater turning power without deforming the fastener
- Metal tool box made for years of rugged use.

MSS-22FTB

WILLIAMS

12 M

22 PIECE 1/2" DRIVE SOCKET AND DRIVE TOOL SET

12 Point Metric, Packed in Exclusive Keep-Safe-Foam System with Metal Box

Product Code	Description
MSS-22FTB	22 Piece Tool Set with TB-104 Metal Box
MSS-22F	22 Piece Tool Set Only - Packed in Keep Safe Foam System

Contents Include:

Drive Tools:

Product Code	Description
S-41AA	15 ½" Flex Handle
S-52EHA	10 3/8" Enclosed Head Ratchet
S-110P	5" Extension

Drive Tools:

Product Code	Description
S-115P	10" Extension
S-140A	Universal Joint

Shallow 6-Point Sockets

Product Code	Size (MM)
STM-1210	10
STM-1211	11
STM-1212	12
STM-1213	13
STM-1214	14
STM-1215	15
STM-1216	16
STM-1217	17
STM-1218	18

Shallow 12-Point Sockets

Product Code	Size (MM)
STM-1219	19
STM-1220	20
STM-1221	21
STM-1222	22
STM-1223	23
STM-1224	24
STM-1225	25
STM-1226	26

Features

Made in U.S.A.

- Keep-Safe-Foam system keeps tools organized and helps prevent loss.
- All tools are professional quality, made of high-grade chrome vanadium steel.
- Sockets feature SUPERTORQUE® lobular openings for greater turning power without deforming the fastener.
- Metal tool box made for years of rugged use.

WILLIAMS®

23 PIECE 1/2" DRIVE BASIC TOOL SET

12 Point Rugged-Case-System Tool Set, SAE

Product Code	Description
50609	23 Piece Basic Tool Set, SAE
50626	Replacement Case Only for Set 50609

Contents Include:

1/2" Drive Tools:

Product Code	Description
32001	9 7/8" Quick-Release Ratchet
32002	3" Extension
32003	6" Extension
32004	10" Extension
32005	15" Flex Handle Breaker Bar
32006	Universal Joint
32008	1/2" F X 3/8" M Adapter
32009	1/2" F X 3/4" M Adapter

1/2" Drive Shallow 12-Point Sockets

Product Code	Size (Inches)
32212	3/8
32214	7/16
32216	1/2
32218	9/16
32220	5/8
32222	11/16
32224	3/4
32226	13/16
32228	7/8
32230	15/16
32232	1
32234	1 1/16
32236	1 1/8
32238	1 3/16
32240	1 1/4

50609

Features

- All tools are professional quality, made of high-grade chrome vanadium steel.
- Sockets feature SUPERTORQUE® lobular openings for greater turning power without deforming the fastener.
- Packed in rugged high-density polyethylene (HDPE) cases that are strong and durable yet light in weight.
- Case is shock proof at both high and low temperatures, equipped with heavy-duty metal latches and hinges.
- Two-component handles are easy to grip and comfortable to carry.

WILLIAMS®

25 PIECE 1/2" DRIVE BASIC TOOL SET

12 Point Rugged-Case-System Tool Set, Metric

Product Code	Description
50619	25 Piece Basic Tool Set, Metric
50637	Replacement Case Only for Set 50619

Contents Include:

1/2" Drive Tools:

Product Code	Description
32001	9 7/8" Quick-Release Ratchet
32002	3" Extension
32003	6" Extension
32004	10" Extension
32005	15" Flex Handle Breaker Bar
32006	Universal Joint
32008	1/2" F X 3/8" M Adapter
32009	1/2" F X 3/4" M Adapter

1/2" Drive Shallow 12-Point Sockets

Product Code	Size (MM)
32610	10
32611	11
32612	12
32613	13
32614	14
32615	15
32616	16
32617	17
32618	18
32619	19
32620	20
32621	21
32622	22
32624	24
32627	27
32630	30
32632	32

50619

Features

- All tools are professional quality, made of high-grade chrome vanadium steel.
- Sockets feature SUPERTORQUE® lobular openings for greater turning power without deforming the fastener.
- Packed in rugged high-density polyethylene (HDPE) cases that are strong and durable yet light in weight.
- Case is shock proof at both high and low temperatures, equipped with heavy-duty metal latches and hinges.
- Two-component handles are easy to grip and comfortable to carry.

50668

WILLIAMS®

23 PIECE 1/2" DRIVE SOCKET AND DRIVE TOOL SET

12 Point Compact Case Tool Set, SAE

Product Code	Description
50668	23 Piece 1/2" Drive Socket and Drive Tool Set

Contents Include:

1/2" Drive Tools:

Product Code	Description
32001	9 7/8" Pear Head Ratchet
32005	15 1/2" Flex Handle
32003	6" Extension

1/2" Drive Deep 12 Point Sockets

Product Code	Size (Inches)	Product Code	Size (Inches)
32416	1/2	32424	3/4
32418	9/16	32426	13/16
32420	5/8	32428	7/8
32422	11/16		

1/2" Drive Shallow 12 Point Sockets:

Product Code	Size (Inches)	Product Code	Size (Inches)	Product Code	Size (Inches)
32114	7/16	32224	3/4	32234	1 1/16
32216	1/2	32226	13/16	32236	1 1/8
32218	9/16	32228	7/8	32240	1 1/4
32220	5/8	32230	15/16		
32222	11/16	32232	1		

Features

- All tools are professional quality, made of high-grade chrome vanadium steel
- Sockets feature SUPERTORQUE® lobular openings for greater turning power without deforming the fastener
- Packed in rugged compact high-density polyethylene (HDPE) cases that are strong and durable yet light in weight

50667

WILLIAMS®

12 PIECE 1/2" DRIVE SOCKET AND DRIVE TOOL SET

12 Point Compact Case Tool Set, SAE

Product Code	Description
50667	12 Piece 1/2" Drive Socket and Drive Tool Set

Contents Include:

1/2" Drive Tools:

Product Code	Description
32001	9 7/8" Pear Head Ratchet
32003	6" Extension

1/2" Drive Shallow 12 Point Sockets:

Product Code	Size (Inches)	Product Code	Size (Inches)	Product Code	Size (Inches)
32216	1/2	32224	3/4	32232	1
32218	9/16	32226	13/16	32236	1 1/8
32220	5/8	32228	7/8		
32222	11/16	32230	15/16		

Features

- All tools are professional quality, made of high-grade chrome vanadium steel
- Sockets feature SUPERTORQUE® lobular openings for greater turning power without deforming the fastener
- Packed in rugged compact high-density polyethylene (HDPE) cases that are strong and durable yet light in weight

50669

WILLIAMS®

12 PIECE 1/2" DRIVE SOCKET AND DRIVE TOOL SET

12 Point Compact Case Tool Set, MM

Product Code	Description
50669	12 Piece 1/2" Drive Socket and Drive Tool Set

Contents Include:

1/2" Drive Tools:

Product Code	Description
32001	9 7/8" Pear Head Ratchet
32003	6" Extension

1/2" Drive Shallow 12 Point Sockets:

Product Code	Size (MM)	Product Code	Size (MM)	Product Code	Size (MM)
32612	12	32616	16	32622	22
32613	13	32617	17	32624	24
32614	14	32618	18		
32615	15	32619	19		

Features

- All tools are professional quality, made of high-grade chrome vanadium steel
- Sockets feature SUPERTORQUE® lobular openings for greater turning power without deforming the fastener
- Packed in rugged compact high-density polyethylene (HDPE) cases that are strong and durable yet light in weight

1/2" DRIVE ERGO® ONE-HAND REVERSING RATCHET

Quick-Release, Narrow Head Design

Product Code	Description	Length (Inches)	Number of Teeth
8155-1/2	One-Hand ergo® Ratchet	10 ¼	60

Features

- Ergonomic, smooth, non-slip handle ensures maximum comfort in the hand.
- Ring switch provides easy, one handed change of direction.
- Easy access reverse lever allows user to change working direction quickly and easily with only one hand.
- Built-in ratchet spinner disc for fast socket turn-down.
- 72 tooth gear with 5° engagement allows engagement in tight working areas.
- Nickel/Chrome plating provides increase protection from rust and corrosion.
- Durable handle material withstands aggressive fluids and oils.

8155-1/2

1/2" DRIVE ENCLOSED HEAD RATCHETS

Williams® Sealed Narrow Head Design, Chrome and Black Industrial Finish

Product Code	Description	Length (Inches)	Number of Teeth
S-52EHA	Chrome Finish Enclosed Head Ratchet	10 ¼	36
S-52EHLA	Chrome Finish Enclosed Head Ratchet, Long	15	36
S-52EHFA	Chrome Finish Flex Head Ratchet	14 ¼	36
SB-52EHA	Black Industrial Finish Enclosed Head Ratchet	10 ¼	36
S-52EHRKA	Repair Kit "EHA" Model Enclosed Head Ratchets		

Fed. Spec: ANSI B107.10M

Made in U.S.A.

BAHCO® Fine-Tooth Bi-Mold Comfort Grip Handles

Product Code	Description	Length (Inches)	Number of Teeth
8150-1/2	Comfort Grip Enclosed Head Ratchet	10 ⅕	80

Features

- Enclosed head is sealed to prevent dust, dirt, and liquids from entering head, preserving internal lubrication.
- Forged one-piece ratchet provide strength and safety for industrial applications.
- Smooth comfort-grip handle permits all-day use without gloves.
- 36 tooth gear with 10 degree of engagement allows engagement in tight working areas.
- Nickel/Chrome plating provides increase protection from rust and corrosion.
- Chrome finish models feature mirror-like exterior that can be easily cleaned after each use.
- Single Pawl ratchet design:
  1) Designed for tighter tolerances between pawl and gear which reduces metal fatigue and slippage under load.
  2) Does not require as many working parts, reducing possible breakage and parts to repair.
- Easy access reverse lever allows user to change working direction quickly and easily with only one hand.

S-52EHLA

S-52EHF

S-52EHA

8150-1/2

1/2" DRIVE ROUND HEAD RATCHETS

Knurled Handle, Chrome and Black Industrial Finish

Product Code	Description	Length (Inches)	Number of Teeth
S-52A	Chrome Finish Round Head Ratchet	11 5/16	72
S-53A	Chrome Finish Round Head Ratchet, Long	15	72
BS-52A	Black Industrial Finish Round Head Ratchet	11 5/16	72
S-52ARK	Repair Kit		

Fed. Spec: ANSI B107.10M

Made in U.S.A.

Features

- Double pawl design with 72 teeth action provides a 5° ratcheting angle.
- Shift lever reverses action instantly.
- Knurled handle provides a non-slip grip.
- Chrome finish models provides increased protection from rust and corrosion.

S-53A

BS-52A

S-52A

S-52LAB

WILLIAMS®

1/2" DRIVE ROUND HEAD LINEMAN'S RATCHET

Knurled Handle, Chrome Finish

Product Code	Description	Length (Inches)	Number of Teeth
S-52LAB	Round Head Lineman's Ratchet	11 5/16	72
S-52LARK	Repair Kit		

Fed. Spec: ANSI B107.10M

Made in U.S.A.

Features

- Same features as other Williams' round head ratchets.
- Extra-large shift lever allows easy reversal even when wearing gloves.

BS-71CBA

WILLIAMS®

1/2" DRIVE NARROW HEAD CONSTRUCTION RATCHET

Knurled Handle, Black Industrial Finish

Product Code	Description	Length (Inches)	Number of Teeth
BS-71CBA	Narrow Head Construction Ratchet	15 13/16	32
BS-71ARKA	Repair Kit		

Fed. Spec: ANSI B107.10M

Made in U.S.A.

Features

- 36 tooth gear with 10 degree of engagement allows engagement in tight working areas.
- Extra-large shift lever reverses action instantly and easily, even when wearing gloves.
- Tapered spud handle easily lines up bolt holes.

S-40AA

SB-40AA

BS-41AA

S-20A

S-10A

S-15A

S-41AA

WILLIAMS®

1/2" DRIVE HANDLES

Knurled Handle, Chrome and Black Industrial Finish

Product Code	Description	Length (Inches)
S-40AA	Chrome Flex Handle	10 13/16
SB-40AA	Black Industrial Finish Flex Handle	10 13/16
S-41AA	Chrome Flex Handle	15 1/2
BS-41AA	Black Industrial Finish Flex Handle	15 1/2
S-20A	Sliding T-Handle	12
S-10A	Speeder Handle	13 5/8
S-15A	Speeder Handle	18 1/16
S-41RK	Flex Handle Repair Kit	

Fed. Spec: ANSI B107.10M

Made in U.S.A.

Features

- Chrome plating provides increased protection from rust and corrosion.
- Drive handles provide extra leverage with greater strength than ratchets.
- Speeder handle is ideal for fast turn down of fasteners.

WILLIAMS®

1/2" DRIVE EXTENSIONS AND ACCESSORIES

High-Polished Chrome Finish

Product Code	Description	Length (Inches)
S-102P	Extension	2
S-110P	Extension	5
S-115P	Extension	10
S-121P	Extension	20
S-140A	Universal Joint	2 11/16
S-70	Ratchet Spinner Disk	1 9/16

Fed. Spec: ANSI B107.10M

WSS-3XT 3 Piece Extension Set in Roll Pouch

Contents Include:

Product Code	Size (Inches)
S-102P	2
S-110P	5
S-115P	10

Made in U.S.A.

Features

- Chrome plating provides increased protection from rust and corrosion.
- Ball and spring socket retention.
- Spinner disk is ideal for fast turn down of fasteners.

S-70

S-140A

WSS-3XT

S-110P

WILLIAMS®

1/2" DRIVE ADAPTORS AND EXTENSION ADAPTERS

High-Polished Chrome and Black Oxide Finish

Product Code	Length (Inches)	Male End (Inches)	Female End (Inches)
Chrome Finish Adapter			
SH-130	1 15/16	3/4	1/2
Black Industrial Finish Adapters			
SH-130B	1 15/16	3/4	1/2
SH-131BA	2 5/16	1/2	3/4
Black Industrial Finish Extension Adapters			
BS-05B	5	3/8	1/2
BS-12B	12	3/8	1/2

Fed. Spec: ANSI B107.10M

Made in U.S.A.

Features

- Ball and spring socket retention.
- Extension adapters offer convenience of extension and adapter in one tool.

BS-05B

BS-12B

SH-130

SH-131BA

SH-130B

WILLIAMS®

1/2" DRIVE STUD REMOVER

Satin Chrome Finish

Product Code	Description	Length (Inches)	Capacity (Inches)
S-60D	Stud Remover	2 7/16	1/4 to 3/4

Fed. Spec: ANSI B107.10M

Made in U.S.A.

Features

- Knurled wheel grips studs during removal.
- Drive shank extends through both sides of housing for even bearing surface.
- Capacity is 1/4" to 3/4" stud diameter.

S-60D

WILLIAMS®

1/2" DRIVE RATCHETS AND HANDLES

High-Polished Chrome Finish

Product Code	Description	Length (Inches)
32001	40 Tooth Quick-Release Ratchet	9 7/8
32011	Ultra-Fine 60-Tooth Ratchet	9 7/8
32005	Flex Handle	15
11920	Flex Handle, Comb. 3/8" x 1/2" Drive	10
32007	Sliding T-Handle	15

Fed. Spec: ANSI B107.10M

Features

- Ball and spring socket retention.
- Williams 1/2" Drive Ratchets Feature:
- Ultra-fine 60 tooth model offers 6° tooth action in a narrow pear head
- Unique Finger-Fit handles to provide a comfortable, non-slip grip and extra turning power.
- Choice of 38-tooth quick-release or 60-tooth ultra-fine gear.
- Narrow pear-shaped heads for access into confined work areas.
- High-polished chrome finish for easy cleaning.
- Unique combination 3/8" x 1/2" drive flex handle offers convenience of both drive sizes on one handle.

WILLIAMS®

1/2" DRIVE EXTENSIONS AND ACCESSORIES

High-Polished Chrome Finish

Product Code	Description	Length (Inches)
32002	Extension	3
32003	Extension	6
32004	Extension	10
32006	Universal Joint	2 11/16
32008	Adaptor, 1/2" F x 3/8" M	1 7/16
32009	Adaptor, 1/2" F x 3/4" M	1 3/4

Fed. Spec: ANSI B107.10M

Features

- Chrome plating provides increased protection from rust and corrosion.
- Ball and spring socket retention.

WILLIAMS®

6 PIECE 1/2" DRIVE RATCHET AND DRIVE TOOL SET

Furnished in a Vinyl Pouch

Product Code	Description
32920	6 Piec 1/2" Drive Ratchet and Accessory Set

Contents Include:

Product Code	Description	Product Code	Description
32001	9 7/8" Quick-Release Ratchet	32005	15" Flex Handle Breaker Bar
32002	3" Extension	32006	Universal Joint
32004	10" Extension	32007	15" Sliding T-Handle

Features

- All tools are professional quality, made of high-grade chrome vanadium steel.
- Sockets feature SUPERTORQUE® lobular openings for greater turning power without deforming the fastener.

WILLIAMS®

1/2" DRIVE SHALLOW 12 POINT SOCKETS, SAE

High-Polished Chrome Finish

		A	B	C	D	E		F
Product Code	Size (Inches)	OAL (Inches)	Drive End Diameter (Inches)	Working End Diameter (Inches)	Broach Depth (Inches)	Bolt Clearance Depth (Inches)	Bolt Clearance Diameter (Inches)	Nose Length (Inches)
ST-1212	3/8	1 1/2	29/32	19/32	5/16	7/8	11/32	23/32
ST-1214	7/16	1 1/2	29/32	21/32	3/8	7/8	13/32	23/32
ST-1216	1/2	1 1/2	29/32	3/4	3/8	7/8	15/32	23/32
ST-1218	9/16	1 1/2	29/32	13/16	3/8	7/8	15/32	23/32
ST-1219	19/32	1 1/2	29/32	7/8	3/8	7/8	15/32	23/32
ST-1220	5/8	1 1/2	29/32	29/32	9/16	7/8	15/32	-
ST-1221	21/32	1 1/2	31/32	31/32	19/32	7/8	15/32	-
ST-1222	11/16	1 1/2	31/32	31/32	13/16	27/32	5/8	-
ST-1224	3/4	1 1/2	1 1/32	1 1/32	13/16	27/32	23/32	-
ST-1225	25/32	1 1/2	1 1/16	1 1/16	13/16	27/32	3/4	-
ST-1226	13/16	1 1/2	1 1/8	1 1/8	13/16	27/32	25/32	-
ST-1228	7/8	1 1/2	1 3/16	1 3/16	13/16	13/16	7/8	-
ST-1230	15/16	1 17/32	1 9/32	1 9/32	13/16	27/32	29/32	-
ST-1231	31/32	1 9/16	1 5/16	1 5/16	27/32	7/8	15/16	-
ST-1232	1	1 9/16	1 11/32	1 11/32	27/32	7/8	31/32	-
ST-1234	1 1/16	1 11/16	1 7/16	1 7/16	31/32	1	1 1/16	-
ST-1236	1 1/8	1 3/4	1 1/2	1 1/2	1 1/32	1 1/16	1 1/8	-
ST-1238	1 3/16	1 3/4	1 5/8	1 5/8	1	1 1/32	1 5/32	-
ST-1240	1 1/4	1 7/8	1 11/16	1 11/16	1 1/8	1 5/32	1 1/4	-
ST-1242	1 5/16	1 7/8	1 3/4	1 3/4	1 1/32	1 5/32	1 9/32	-
ST-1244	1 3/8	2 1/16	1 13/16	1 13/16	1	1 5/16	1 11/32	-
ST-1246	1 7/16	2 1/4	1 15/16	1 15/16	1 1/32	1 1/2	1 1/8	-
ST-1248	1 1/2	2 1/4	2	2	1 1/16	1 1/2	1 1/8	-

Fed. Spec: ANSI B107.1

ST-1220 ST-1212

WSS-15RC 15 Piece 1/2" Drive Shallow 12-Point Socket Set on Clip Rail

Contents Include:

Product Code	Size (Inches)	Product Code	Size (Inches)	Product Code	Size (Inches)
ST-1212	3/8	ST-1222	11/16	ST-1232	1
ST-1214	7/16	ST-1224	3/4	ST-1234	1 1/16
ST-1216	1/2	ST-1226	13/16	ST-1236	1 1/8
ST-1218	9/16	ST-1228	7/8	ST-1238	1 3/16
ST-1220	5/8	ST-1230	15/16	ST-1240	1 1/4

WSS-15RC

WSS-23RC 23 Piece 1/2" Drive Shallow 12-Point Socket Set on Clip Rail

Contents Include:

Product Code	Size (Inches)	Product Code	Size (Inches)	Product Code	Size (Inches)	Product Code	Size (Inches)
ST-1212	3/8	ST-1221	21/32	ST-1230	15/16	ST-1240	1 1/4
ST-1214	7/16	ST-1222	11/16	ST-1231	31/32	ST-1242	1 5/16
ST-1216	1/2	ST-1224	3/4	ST-1232	1	ST-1244	1 3/8
ST-1218	9/16	ST-1225	25/32	ST-1234	1 1/16	ST-1246	1 7/16
ST-1219	19/32	ST-1226	13/16	ST-1236	1 1/8	ST-1248	1 1/2
ST-1220	5/8	ST-1228	7/8	ST-1238	1 3/16		

Made in U.S.A.

Features

- SUPERTORQUE® lobular openings for greater turning power without deforming the fastener.
- Designed for quick engagement on both 6 and 12 point fasteners.

WSS-23RC

WILLIAMS®

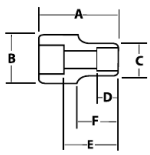

32220 32212

32922

32924

1/2" DRIVE SHALLOW 12 POINT SOCKETS, SAE

High-Polished Chrome Finish

Product Code	Size (Inches)	A OAL (Inches)	B Drive End Diameter (Inches)	C Working End Diameter (Inches)	D Broach Depth (Inches)	E Bolt Clearance Depth (Inches)	Bolt Clearance Diameter (Inches)	F Nose Length (Inches)
32212	3/8	1 1/2	7/8	5/8	1/2	25/32	5/16	23/32
32214	7/16	1 1/2	7/8	11/16	1/2	27/32	13/32	11/16
32216	1/2	1 1/2	7/8	3/4	17/32	27/32	15/32	23/32
32218	9/16	1 1/2	7/8	13/16	17/32	27/32	17/32	11/16
32220	5/8	1 1/2	29/32	29/32	17/32	27/32	9/16	-
32222	11/16	1 1/2	31/32	31/32	9/16	27/32	21/32	-
32224	3/4	1 1/2	1	1	3/4	29/32	23/32	-
32226	13/16	1 1/2	1 1/8	1 1/8	25/32	31/32	25/32	-
32228	7/8	1 5/8	1 3/16	1 3/16	7/8	1 1/32	7/8	-
32230	15/16	1 5/8	1 1/4	1 1/4	7/8	1 5/32	29/32	-
32232	1	1 5/8	1 5/16	1 5/16	7/8	1 3/16	31/32	-
32234	1 1/16	1 3/4	1 7/16	1 7/16	31/32	1 9/32	1 1/16	-
32236	1 1/8	1 3/4	1 1/2	1 1/2	31/32	1 5/16	1 5/32	-
32238	1 3/16	1 3/4	1 9/16	1 9/16	31/32	1 5/16	1 1/4	-
32240	1 1/4	1 3/4	1 11/16	1 21/32	31/32	1 5/16	1 1/4	-
32248	1 1/2	1 31/32	1 11/16	1 31/32	1 1/8	1 1/2	1 1/8	-

Fed. Spec: ANSI B107.1

32922 9 Piece 1/2" Drive Shallow 12-Point Socket Set on Clip Rail

Contents Include:

Product Code	Size (Inches)	Product Code	Size (Inches)	Product Code	Size (Inches)
32216	1/2	32222	11/16	32228	7/8
32218	9/16	32224	3/4	32230	15/16
32220	5/8	32226	13/16	32232	1

32924 16 Piece 1/2" Drive Shallow 12-Point Socket Set on Clip Rail

Contents Include:

Product Code	Size (Inches)	Product Code	Size (Inches)	Product Code	Size (Inches)	Product Code	Size (Inches)
32212	3/8	32220	5/8	32228	7/8	32236	1 1/8
32214	7/16	32222	11/16	32230	15/16	32238	1 3/16
32216	1/2	32224	3/4	32232	1	32240	1 1/4
32218	9/16	32226	13/16	32234	1 1/16	32248	1 1/2

Features

- SUPERTORQUE® lobular openings for greater turning power without deforming the fastener.
- Designed for quick engagement on both 6 and 12 point fasteners.

WILLIAMS®

1/2" DRIVE SHALLOW SOCKETS, 6 POINT, SAE

High-Polished Chrome Finish

Product Code	Size (Inches)	A OAL (Inches)	B Drive End Diameter (Inches)	C Working End Diameter (Inches)	D Broach Depth (Inches)	E Bolt Clearance Depth (Inches)	Bolt Clearance Diameter (Inches)	F Nose Length (Inches)
ST-612	3/8	1 1/2	29/32	19/32	5/16	7/8	11/32	23/32
ST-614	7/16	1 1/2	29/32	21/32	3/8	7/8	13/32	23/32
ST-616	1/2	1 1/2	29/32	3/4	3/8	7/8	15/32	23/32
ST-618	9/16	1 1/2	29/32	13/16	3/8	7/8	15/32	23/32
ST-619	19/32	1 1/2	29/32	7/8	3/8	7/8	15/32	23/32
ST-620	5/8	1 1/2	29/32	29/32	9/16	7/8	15/32	-
ST-622	11/16	1 1/2	31/32	31/32	13/16	27/32	5/8	-
ST-624	3/4	1 1/2	1 1/32	1 1/32	13/16	27/32	23/32	-
ST-625	25/32	1 1/2	1 1/16	1 1/16	13/16	27/32	3/4	-
ST-626	13/16	1 1/2	1 1/8	1 1/8	13/16	27/32	25/32	-
ST-628	7/8	1 1/2	1 3/16	1 3/16	13/16	13/16	7/8	-
ST-630	15/16	1 17/32	1 9/32	1 9/32	13/16	27/32	29/32	-
ST-632	1	1 9/16	1 11/32	1 11/32	27/32	7/8	31/32	-
ST-634	1 1/16	1 11/16	1 7/16	1 7/16	31/32	1	1 1/16	-
ST-636	1 1/8	1 3/4	1 1/2	1 1/2	1 1/32	1 1/16	1 1/8	-
ST-640	1 1/4	1 7/8	1 11/16	1 11/16	1 1/8	1 5/32	1 1/4	-

Fed. Spec: ANSI B107.1

WSS-14HRC 14 Piece 1/2" Drive Shallow 6 Point Socket Set on Clip Rail

Contents Include:

Product Code	Size (Inches)	Product Code	Size (Inches)	Product Code	Size (Inches)
ST-612	3/8	ST-622	11/16	ST-632	1
ST-614	7/16	ST-624	3/4	ST-634	1 1/16
ST-616	1/2	ST-626	13/16	ST-636	1 1/8
ST-618	9/16	ST-628	7/8	ST-640	1 1/4
ST-620	5/8	ST-630	15/16		

Features

Made in U.S.A.

- SUPERTORQUE® lobular openings for greater turning power without deforming the fastener.
- Designed for maximum engagement on 6 point fasteners.

WILLIAMS

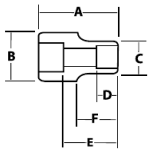

32120 32112

1/2" DRIVE SHALLOW 6 POINT SOCKETS, SAE

High-Polished Chrome Finish

Product Code	Size (Inches)	A OAL (Inches)	B Drive End Diameter (Inches)	C Working End Diameter (Inches)	D Broach Depth (Inches)	E Bolt Clearance Depth (Inches)	Bolt Clearance Diameter (Inches)	F Nose Length (Inches)
32112	3/8	1 1/2	7/8	5/8	1/2	25/32	5/16	23/32
32114	7/16	1 1/2	7/8	11/16	1/2	27/32	13/32	11/16
32116	1/2	1 1/2	7/8	3/4	17/32	27/32	15/32	23/32
32118	9/16	1 1/2	7/8	13/16	17/32	27/32	17/32	11/16
32120	5/8	1 1/2	29/32	29/32	17/32	27/32	9/16	-
32122	11/16	1 1/2	31/32	31/32	9/16	27/32	21/32	-
32124	3/4	1 1/2	1	1	3/4	29/32	23/32	-
32126	13/16	1 1/2	1 1/8	1 1/8	25/32	31/32	25/32	-
32128	7/8	1 5/8	1 3/16	1 3/16	7/8	1 1/32	7/8	-
32130	15/16	1 5/8	1 1/4	1 1/4	7/8	1 5/32	29/32	-
32132	1	1 5/8	1 5/16	1 5/16	7/8	1 3/16	31/32	-
32134	1 1/16	1 3/4	1 7/16	1 7/16	31/32	1 9/32	1 1/16	-
32136	1 1/8	1 3/4	1 1/2	1 1/2	31/32	1 5/16	1 5/32	-
32138	1 3/16	1 3/4	1 9/16	1 9/16	31/32	1 5/16	1 1/4	-
32140	1 1/4	1 3/4	1 11/16	1 21/32	31/32	1 5/16	1 1/4	-
32148	1 1/2	1 31/32	1 11/16	1 31/32	1 1/8	1 1/2	1 1/8	-

Fed. Spec: ANSI B107.1

32934 9 Piece 1/2" Drive Shallow 6-Point Socket Set on Clip Rail

Contents Include:

Product Code	Size (Inches)	Product Code	Size (Inches)	Product Code	Size (Inches)
32116	1/2	32122	11/16	32128	7/8
32118	9/16	32124	3/4	32130	15/16
32120	5/8	32126	13/16	32132	1

32934

32937 16 Piece 1/2" Drive Shallow 6-Point Socket Set on Clip Rail

Contents Include:

Product Code	Size (Inches)	Product Code	Size (Inches)	Product Code	Size (Inches)	Product Code	Size (Inches)
32112	3/8	32120	5/8	32128	7/8	32136	1 1/8
32114	7/16	32122	11/16	32130	15/16	32138	1 3/16
32116	1/2	32124	3/4	32132	1	32140	1 1/4
32118	9/16	32126	13/16	32134	1 1/16	32148	1 1/2

Features

- SUPERTORQUE® lobular openings for greater turning power without deforming the fastener.
- Designed for quick engagement on 6 point fasteners.

32937

WILLIAMS®

1/2" DRIVE SHALLOW SOCKETS, 8 POINT, SAE

High-Polished Chrome Finish

Product Code	Size (Inches)	A OAL (Inches)	B Drive End Diameter (Inches)	C Working End Diameter (Inches)	D Broach Depth (Inches)	E Bolt Clearance Depth (Inches)	Bolt Clearance Diameter (Inches)	F Nose Length (Inches)
ST-812	3/8	1 1/2	7/8	23/32	5/16	27/32	5/16	7/8
ST-814	7/16	1 1/2	7/8	13/16	3/8	27/32	5/16	7/8
ST-816	1/2	1 1/2	29/32	29/32	13/32	27/32	11/32	-
ST-818	9/16	1 1/2	31/32	31/32	7/16	27/32	7/16	-
ST-820	5/8	1 1/2	1 1/16	1 1/16	1/2	27/32	7/16	-
ST-822	11/16	1 1/2	1 3/16	1 3/16	1/2	27/32	17/32	-
ST-824	3/4	1 1/2	1 9/32	1 9/32	9/16	13/16	23/32	-
ST-826	13/16	1 5/8	1 7/16	17/16	9/16	31/32	27/32	-
ST-828	7/8	1 3/4	1 1/2	1 1/2	5/8	1 1/16	15/16	-
ST-830	15/16	1 13/16	1 5/8	1 5/8	11/16	1 1/8	1 1/32	-
ST-832	1	1 15/16	1 11/16	1 11/16	11/16	1 1/4	1 1/32	-
ST-834	1 1/16	1 15/16	1 3/4	1 3/4	23/32	1 1/8	13/16	-
ST-836	1 1/8	2	1 13/16	1 13/16	3/4	1 3/16	13/16	-
ST-840	1 1/4	2	2	2	25/32	1 3/16	1	-

Fed. Spec: ANSI B107.1

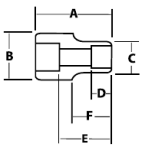

ST-812

WSS-814RC 14 Piece 8 Point Socket Set on Clip Rail

Contents Include:

Product Code	Size (Inches)	Product Code	Size (Inches)	Product Code	Size (Inches)
ST-812	3/8	ST-822	11/16	ST-832	1
ST-814	7/16	ST-824	3/4	ST-834	1 1/16
ST-816	1/2	ST-826	13/16	ST-836	1 1/8
ST-818	9/16	ST-828	7/8	ST-840	1 1/4
ST-820	5/8	ST-830	15/16		

WSS-814RC

Made in U.S.A.

Features

- SUPERTORQUE® lobular openings for greater turning power without deforming the fastener.
- 8 point sockets are designed for quick engagement on 4 point fasteners.

WILLIAMS®

1/2" DRIVE CROWFOOT WRENCH, FLARE NUT, 12 POINT

Satin Chrome Finish, SAE

Product Code	Size (Inches)	A Diameter of Head	B Thickness of Head	C Width of Slot	D Length of Centers
SCF36	1 1/8	1 5/8	7/8	27/32	1 5/32
SCF38	1 3/16	1 11/16	7/8	27/32	1 3/16
SCF40	1 1/4	1 25/32	7/8	15/16	1 15/64
SCF42	1 5/16	1 27/32	7/8	31/32	1 17/64
SCF44	1 3/8	1 15/16	15/16	1 1/16	1 5/16
SCF46	1 7/16	2	15/16	1 1/16	1 11/32
SCF48	1 1/2	2 1/16	15/16	1 1/8	1 3/8
SCF50	1 9/16	2 5/32	15/16	1 5/32	1 27/64
SCF52	1 5/8	2 7/32	15/16	1 7/32	1 29/64
SCF54	1 11/16	2 5/16	1	1 5/16	1 33/64
SCF56	1 3/4	2 3/8	1	1 5/16	1 35/64
SCF58	1 13/16	2 15/32	1	1 11/32	1 19/32
SCF60	1 7/8	2 9/16	1 1/16	1 3/8	1 41/64
SCF62	1 15/16	2 5	1 1/16	1 7/16	1 43/64
SCF64	2	2 23/32	1 1/16	1 9/16	1 23/32

Fed. Spec: ASME B107.21 Type 1 Class 1

SCF36

SCF60

Made in U.S.A.

Features

- Satin chrome finish

SB-526

WILLIAMS®

1/2" DRIVE 5 POINT PENTA-SOCKET

Black Industrial Finish

Product Code	Size (Inches)	A OAL (Inches)	B Drive End Diameter (Inches)	C Working End Diameter (Inches)	D Broach Depth (Inches)	E Bolt Clearance Depth (Inches)	Bolt Clearance Diameter (Inches)	F Nose Length (Inches)
SB-526	51/64	1 1/4	1 1/8	1 1/8	7/16	1/2	23/32	-

Features

- 5 point Penta-Socket services 5 point nuts found on tamper-resistant Buffalo covers used by gas, electric, and some water companies to protect shutoff gates.

Made in U.S.A.

SD-1224 SD-1216

WILLIAMS®

1/2" DRIVE DEEP SOCKETS, 12 POINT, SAE

High-Polished Chrome Finish

Product Code	Size (Inches)	A OAL (Inches)	B Drive End Diameter (Inches)	C Working End Diameter (Inches)	D Broach Depth (Inches)	E Bolt Clearance Depth (Inches)	Bolt Clearance Diameter (Inches)	F Nose Length (Inches)
SD-1216	1/2	3 1/4	29/32	3/4	13/32	2 19/32	15/32	2 15/32
SD-1218	9/16	3 1/4	29/32	13/16	7/16	2 19/32	15/32	2 15/32
SD-1220	5/8	3 1/4	29/32	29/32	15/32	2 7/16	19/32	-
SD-1222	11/16	3 1/4	31/32	31/32	17/32	2 11/32	21/32	-
SD-1224	3/4	3 1/4	1 1/16	1 1/16	19/32	2 5/16	23/32	-
SD-1225	25/32	3 1/4	1 1/16	1 1/16	21/32	2 9/32	25/32	-
SD-1226	13/16	3 1/4	1 1/8	1 1/8	21/32	2 9/32	25/32	-
SD-1228	7/8	3 1/4	1 3/16	1 3/16	23/32	2 9/32	27/32	-
SD-1230	15/16	3 1/4	1 9/32	1 9/32	3/4	2 9/32	29/32	-
SD-1232	1	3 1/4	1 11/32	1 11/32	3/4	2 1/4	1	-
SD-1234	1 1/16	3 1/4	1 7/16	1 7/16	3/4	2 1/4	1 1/16	
SD-1236	1 1/8	3 1/4	1 1/2	1 1/2	25/32	2 1/4	1 3/32	-

Fed. Spec: ANSI B107.1

WSSD-11RC 11 Piece 1/2" Drive Deep 12 Point Socket Set on Clip Rail

Contents Include:

Product Code	Size (Inches)	Product Code	Size (Inches)	Product Code	Size (Inches)
SD-1216	1/2	SD-1224	3/4	SD-1232	1
SD-1218	9/16	SD-1226	13/16	SD-1234	1 1/16
SD-1220	5/8	SD-1228	7/8	SD-1236	1 1/8
SD-1222	11/16	SD-1230	15/16		

Features

- SUPERTORQUE® lobular openings for greater turning power without deforming the fastener.
- Designed for quick engagement on both 6 and 12 point fasteners.

Made in U.S.A.

WSSD-11RC

WILLIAMS®

12 F

1/2" DRIVE DEEP SOCKETS, 12 POINT, SAE

High-Polished Chrome Finish

		A	B	C	D	E		F
Product Code	Size (Inches)	OAL (Inches)	Drive End Diameter (Inches)	Working End Diameter (Inches)	Broach Depth (Inches)	Bolt Clearance Depth (Inches)	Bolt Clearance Diameter (Inches)	Nose Length (Inches)
32412	3/8	3	7/8	5/8	1	2 7/32	11/32	1 15/32
32414	7/16	3 1/32	7/8	11/16	1 1/8	2 9/32	13/32	1 15/32
32416	1/2	3 1/32	7/8	3/4	31/32	2 7/32	7/16	1 15/32
32418	9/16	3 1/32	7/8	13/16	1 3/32	2 7/32	1/2	1 15/32
32420	5/8	3 1/32	29/32	29/32	1 3/16	2 3/16	9/16	-
32422	11/16	3 1/32	15/16	15/16	1 3/8	2 3/16	21/32	-
32424	3/4	3 1/32	1 1/16	1 1/16	1 1/4	2 11/32	23/32	-
32426	13/16	3 1/32	1 1/8	1 1/8	1 15/32	2 3/16	3/4	-
32428	7/8	3 1/32	1 3/16	1 3/16	1 13/32	2 1/4	27/32	-
32430	15/16	3 1/32	1 1/4	1 1/4	1 13/32	2 5/32	29/32	-
32432	1	3 1/32	1 11/32	1 11/32	1 13/32	2 5/32	15/16	-
32434	1 1/16	3 1/32	1 13/32	1 13/32	1 3/8	2 11/32	1 1/32	-
32436	1 1/8	3 1/32	1 1/2	1 1/2	1 7/16	2 3/8	1 1/16	-
32438	1 3/16	3 1/32	1 9/16	1 9/16	1 7/16	2 3/16	1 1/16	-
32440	1 1/4	3 1/32	1 21/32	1 21/32	1 7/16	2 3/16	1 1/16	-
32448	1 1/2	3 1/32	1 15/16	1 31/32	1 7/16	2 3/16	1 1/16	-

Fed. Spec: ANSI B107.1

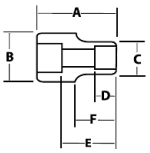

32420 32412

32926 9 Piece 1/2" Drive Deep 12 Point Socket Set on Clip Rail

Contents Include:

Product Code	Size (Inches)	Product Code	Size (Inches)	Product Code	Size (Inches)
32416	1/2	32422	11/16	32428	7/8
32418	9/16	32424	3/4	32430	15/16
32420	5/8	32426	13/16	32432	1

32926

32928 16 Piece 1/2" Drive Deep 12 Point Socket Set on Clip Rail

Contents Include:

Product Code	Size (Inches)	Product Code	Size (Inches)	Product Code	Size (Inches)	Product Code	Size (Inches)
32412	3/8	32420	5/8	32428	7/8	32436	1 1/8
32414	7/16	32422	11/16	32430	15/16	32438	1 3/16
32416	1/2	32424	3/4	32432	1	32440	1 1/4
32418	9/16	32426	13/16	32434	1 1/16	32448	1 1/2

Features

- SUPERTORQUE® lobular openings for greater turning power without deforming the fastener.
- Designed for quick engagement on both 6 and 12 point fasteners.

32928

SD-624 SD-616

WILLIAMS

1/2" DRIVE DEEP SOCKETS, 6 POINT, SAE

High-Polished Chrome Finish

Product Code	Size (Inches)	A OAL (Inches)	B Drive End Diameter (Inches)	C Working End Diameter (Inches)	D Broach Depth (Inches)	E Bolt Clearance Depth (Inches)	Bolt Clearance Diameter (Inches)	F Nose Length (Inches)
SD-616	1/2	3 1/4	29/32	3/4	13/32	2 19/32	15/32	2 15/32
SD-618	9/16	3 1/4	29/32	13/16	7/16	2 19/32	15/32	2 15/32
SD-620	5/8	3 1/4	29/32	29/32	15/32	2 7/16	19/32	-
SD-622	11/16	3 1/4	31/32	31/32	17/32	2 11/32	21/32	-
SD-624	3/4	3 1/4	1 1/16	1 1/16	19/32	2 5/16	23/32	-
SD-626	13/16	3 1/4	1 1/8	1 1/8	21/32	2 9/32	25/32	-
SD-628	7/8	3 1/4	1 3/16	1 3/16	23/32	2 9/32	27/32	-
SD-630	15/16	3 1/4	1 9/32	1 9/32	3/4	2 9/32	29/32	-
SD-632	1	3 1/4	1 11/32	1 11/32	3/4	2 1/4	1	-
SD-634	1 1/16	3 1/4	1 7/16	1 7/16	25/32	2 1/4	1 1/32	-
SD-636	1 1/8	3 1/4	1 1/2	1 1/2	25/32	2 1/4	1 3/32	-

Fed. Spec: ANSI B107.1

WSSD-11HRC 11 Piece 1/2" Drive Deep 6 Point Socket Set on Clip Rail

Contents Include:

Product Code	Size (Inches)	Product Code	Size (Inches)	Product Code	Size (Inches)
SD-616	1/2	SD-624	3/4	SD-632	1
SD-618	9/16	SD-626	13/16	SD-634	1 1/16
SD-620	5/8	SD-628	7/8	SD-636	1 1/8
SD-622	11/16	SD-630	15/16		

Features

Made in U.S.A.

- SUPERTORQUE® lobular openings for greater turning power without deforming the fastener.
- Designed for maximum engagement on 6 point fasteners.

WSSD-11HRC

WILLIAMS®

1/2" DRIVE DEEP SOCKETS, 6 POINT, SAE

High-Polished Chrome Finish

Product Code	Size (Inches)	A OAL (Inches)	B Drive End Diameter (Inches)	C Working End Diameter (Inches)	D Broach Depth (Inches)	E Bolt Clearance Depth (Inches)	Bolt Clearance Diameter (Inches)	F Nose Length (Inches)
32312	3/8	3	7/8	5/8	1	2 7/32	11/32	1 15/32
32314	7/16	3 1/32	7/8	11/16	1 1/8	2 9/32	13/32	1 15/32
32316	1/2	3 1/32	7/8	3/4	31/32	2 7/32	7/16	1 15/32
32318	9/16	3 1/32	7/8	13/16	1 3/32	2 7/32	1/2	1 15/32
32320	5/8	3 1/32	29/32	29/32	1 3/16	2 3/16	9/16	-
32322	11/16	3 1/32	15/16	15/16	1 3/8	2 3/16	21/32	-
32324	3/4	3 1/32	1 1/16	1 1/16	1 1/4	2 11/32	23/32	-
32326	13/16	3 1/32	1 1/8	1 1/8	1 15/32	2 3/16	3/4	-
32328	7/8	3 1/32	1 3/16	1 3/16	1 13/32	2 1/4	27/32	-
32330	15/16	3 1/32	1 1/4	1 1/4	1 13/32	2 5/32	29/32	-
32332	1	3 1/32	1 11/32	1 11/32	1 13/32	2 5/32	15/16	-
32334	1 1/16	3 1/32	1 13/32	1 13/32	1 3/8	2 11/32	1 1/32	-
32336	1 1/8	3 1/32	1 1/2	1 1/2	1 7/16	2 3/8	1 1/16	-
32338	1 3/16	3 1/32	1 9/16	1 9/16	1 7/16	2 3/16	1 1/16	-
32340	1 1/4	3 1/32	1 21/32	1 21/32	1 7/16	2 3/16	1 1/16	-
32348	1 1/2	3 1/32	1 15/16	1 31/32	1 7/16	2 3/16	1 1/16	-

Fed. Spec: ANSI B107.1

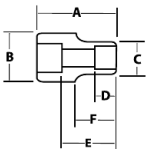

32320 32312

32936 9 Piece 1/2" Drive Deep 6 Point Socket Set on Clip Rail

Contents Include:

Product Code	Size (Inches)	Product Code	Size (Inches)	Product Code	Size (Inches)
32316	1/2	32322	11/16	32328	7/8
32318	9/16	32324	3/4	32330	15/16
32320	5/8	32326	13/16	32332	1

32936

32939 16 Piece 1/2" Drive Deep 6 Point Socket Set on Clip Rail

Contents Include:

Product Code	Size (Inches)	Product Code	Size (Inches)	Product Code	Size (Inches)	Product Code	Size (Inches)
32312	3/8	32320	5/8	32328	7/8	32336	1 1/8
32314	7/16	32322	11/16	32330	15/16	32338	1 3/16
32316	1/2	32324	3/4	32332	1	32340	1 1/4
32318	9/16	32326	13/16	32334	1 1/16	32348	1 1/2

Features

- SUPERTORQUE® lobular openings for greater turning power without deforming the fastener.
- Designed for quick engagement on 6 point fasteners.

32939

WILLIAMS®

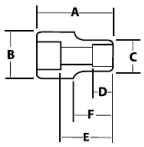

STM-1229 STM-1212

1/2" DRIVE SHALLOW SOCKETS, 12 POINT, METRIC

High-Polished Chrome Finish

Product Code	Size (MM)	A OAL (Inches)	B Drive End Diameter (Inches)	C Working End Diameter (Inches)	D Broach Depth (Inches)	E Bolt Clearance Depth (Inches)	Bolt Clearance Diameter (Inches)	F Nose Length (Inches)
STM-1210	10	1 1/2	29/32	19/32	5/16	7/8	11/32	23/32
STM-1211	11	1 1/2	29/32	11/16	5/16	7/8	13/32	23/32
STM-1212	12	1 1/2	29/32	23/32	13/32	7/8	7/16	23/32
STM-1213	13	1 1/2	29/32	25/32	3/8	7/8	15/32	23/32
STM-1214	14	1 1/2	29/32	27/32	3/8	7/8	15/32	23/32
STM-1215	15	1 1/2	29/32	7/8	3/8	7/8	15/32	-
STM-1216	16	1 1/2	29/32	29/32	9/16	7/8	15/32	-
STM-1217	17	1 1/2	31/32	31/32	9/16	7/8	15/32	-
STM-1218	18	1 1/2	1	1	13/16	27/32	15/32	-
STM-1219	19	1 1/2	1 1/32	1 1/32	13/16	27/32	23/32	-
STM-1220	20	1 1/2	1 1/16	1 1/16	13/16	27/32	23/32	-
STM-1221	21	1 1/2	1 1/8	1 1/8	13/16	27/32	3/4	-
STM-1222	22	1 1/2	1 3/16	1 3/16	13/16	27/32	25/32	-
STM-1223	23	1 1/2	1 1/4	1 1/4	25/32	13/16	27/32	-
STM-1224	24	1 17/32	1 9/32	1 9/32	13/16	27/32	7/8	-
STM-1225	25	1 9/16	1 5/16	1 5/16	13/16	7/8	15/16	-
STM-1226	26	1 5/8	1 3/8	1 3/8	29/32	15/16	31/32	-
STM-1227	27	1 23/32	1 7/16	1 7/16	31/32	1	1	-
STM-1228	28	1 3/4	1 1/2	1 1/2	1	1 1/16	1 1/32	-
STM-1229	29	1 3/4	1 9/16	1 9/16	1 1/32	1 1/16	1 1/16	-
STM-1230	30	1 3/4	1 5/8	1 5/8	1 1/32	1 1/32	1 3/32	-
STM-1232	32	1 7/8	1 11/16	1 11/16	1 1/8	1 5/32	1 3/16	-
STM-1234	34	2 1/16	1 3/4	1 3/4	7/8	1 7/16	1	-
STM-1236	36	2 1/16	1 15/16	1 15/16	7/8	1 7/16	1 13/32	-

Fed. Spec: ANSI B107.5

MSS-15RC

MSS-15RC 15 Piece 1/2" Drive Shallow 12 Point Socket Set on Clip Rail

Contents Include:

Product Code	Size (MM)	Product Code	Size (MM)	Product Code	Size (MM)	Product Code	Size (MM)
STM-1210	10	STM-1214	14	STM-1218	18	STM-1222	22
STM-1211	11	STM-1215	15	STM-1219	19	STM-1223	23
STM-1212	12	STM-1216	16	STM-1220	20	STM-1224	24
STM-1213	13	STM-1217	17	STM-1221	21		

MSS-24RC 24 Piece 1/2" Drive Shallow 12 Point Socket Set on Clip Rail

Contents Include:

Product Code	Size (MM)	Product Code	Size (MM)	Product Code	Size (MM)	Product Code	Size (MM)
STM-1210	10	STM-1216	16	STM-1222	22	STM-1228	28
STM-1211	11	STM-1217	17	STM-1223	23	STM-1229	29
STM-1212	12	STM-1218	18	STM-1224	24	STM-1230	30
STM-1213	13	STM-1219	19	STM-1225	25	STM-1232	32
STM-1214	14	STM-1220	20	STM-1226	26	STM-1234	34
STM-1215	15	STM-1221	21	STM-1227	27	STM-1236	36

Made in U.S.A.

Features

- SUPERTORQUE® lobular openings for greater turning power without deforming the fastener.
- Designed for quick engagement on both 6 and 12 point fasteners.

MSS-24RC

WILLIAMS®

12 M

1/2" DRIVE SHALLOW SOCKETS, 12 POINT, METRIC

High-Polished Chrome Finish

		A	B	C	D	E		F
Product Code	Size (MM)	OAL (Inches)	Drive End Diameter (Inches)	Working End Diameter (Inches)	Broach Depth (Inches)	Bolt Clearance Depth (Inches)	Bolt Clearance Diameter (Inches)	Nose Length (Inches)
32609	9	1 1/2	7/8	9/16	9/16	11/16	5/16	23/32
32610	10	1 1/2	7/8	5/8	1/2	27/32	3/8	23/32
32611	11	1 1/2	7/8	21/32	1/2	7/8	13/32	23/32
32612	12	1 1/2	7/8	23/32	1/2	7/8	7/16	23/32
32613	13	1 1/2	7/8	3/4	9/16	27/32	15/32	23/32
32614	14	1 1/2	7/8	13/16	9/16	13/16	17/32	23/32
32615	15	1 1/2	7/8	7/8	17/32	13/16	9/16	-
32616	16	1 1/2	29/32	29/32	17/32	27/32	19/32	-
32617	17	1 1/2	15/16	15/16	17/32	27/32	21/32	-
32618	18	1 1/2	1	1	3/4	13/16	11/16	-
32619	19	1 1/2	1 1/16	1 1/16	3/4	7/8	45/64	-
32620	20	1 1/2	1 3/32	1 3/32	25/32	15/16	47/64	-
32621	21	1 1/2	1 1/8	1 1/8	25/32	15/16	49/64	-
32622	22	1 5/8	1 3/16	1 3/16	7/8	1 1/32	25/32	-
32623	23	1 5/8	1 7/32	1 7/32	7/8	1 1/32	13/16	-
32624	24	1 5/8	1 1/4	1 1/4	7/8	1 3/32	53/64	-
32625	25	1 5/8	1 5/16	1 5/16	7/8	1 3/32	55/64	-
32626	26	1 3/4	1 5/16	1 5/16	15/16	1 3/16	57/64	-
32627	27	1 3/4	1 7/16	1 7/16	15/16	1 3/16	29/32	-
32628	28	1 3/4	1 7/16	1 7/16	31/32	1 9/32	15/16	-
32629	29	1 3/4	1 1/2	1 1/2	31/32	1 9/32	31/32	-
32630	30	1 3/4	1 9/16	1 9/16	31/32	1 11/32	63/64	-
32632	31	1 3/4	1 5/8	1 5/8	31/32	1 11/32	1 1/64	-
32636	32	1 31/32	1 11/16	1 31/32	1 1/8	1 1/2	1 1/32	-

Fed. Spec: ANSI B107.5

32615 32609

32930 10 Piece 1/2" Drive Shallow 12 Point Socket Set on Clip Rail

Contents Include:

Product Code	Size (MM)	Product Code	Size (MM)	Product Code	Size (MM)
32610	10	32614	14	32618	18
32611	11	32615	15	32619	19
32612	12	32616	16		
32613	13	32617	17		

32930

32932 16 Piece 1/2" Drive Shallow 12 Point Socket Set on Clip Rail

Contents Include:

Product Code	Size (MM)	Product Code	Size (MM)	Product Code	Size (MM)	Product Code	Size (MM)
32609	9	32613	13	32617	17	32621	21
32610	10	32614	14	32618	18	32622	22
32611	11	32615	15	32619	19	32623	23
32612	12	32616	16	32620	20	32624	24

Features

- SUPERTORQUE® lobular openings for greater turning power without deforming the fastener.
- Designed for quick engagement on both 6 and 12 point fasteners.

32932

32515 32509

WILLIAMS®

1/2" DRIVE SHALLOW SOCKETS, 6 POINT, METRIC

High-Polished Chrome Finish

Product Code	Size (MM)	A OAL (Inches)	B Drive End Diameter (Inches)	C Working End Diameter (Inches)	D Broach Depth (Inches)	E Bolt Clearance Depth (Inches)	Bolt Clearance Diameter (Inches)	F Nose Length (Inches)
32509	9	1 1/2	7/8	9/16	9/16	11/16	5/16	23/32
32510	10	1 1/2	7/8	5/8	1/2	27/32	3/8	23/32
32511	11	1 1/2	7/8	21/32	1/2	7/8	13/32	23/32
32512	12	1 1/2	7/8	23/32	1/2	7/8	7/16	23/32
32513	13	1 1/2	7/8	3/4	9/16	27/32	15/32	23/32
32514	14	1 1/2	7/8	13/16	9/16	13/16	17/32	23/32
32515	15	1 1/2	7/8	7/8	17/32	13/16	9/16	-
32516	16	1 1/2	29/32	29/32	17/32	27/32	19/32	-
32517	17	1 1/2	15/16	15/16	17/32	27/32	21/32	-
32518	18	1 1/2	1	1	3/4	13/16	11/16	-
32519	19	1 1/2	1 1/16	1 1/16	3/4	7/8	45/64	-
32520	20	1 1/2	1 3/32	1 3/32	25/32	15/16	47/64	-
32521	21	1 1/2	1 1/8	1 1/8	25/32	15/16	49/64	-
32522	22	1 5/8	1 3/16	1 3/16	7/8	1 1/32	25/32	-
32523	23	1 5/8	1 7/32	1 7/32	7/8	1 1/32	13/16	-
32524	24	1 5/8	1 1/4	1 1/4	7/8	1 3/32	53/64	-
32525	25	1 5/8	1 5/16	1 5/16	7/8	1 3/32	55/64	-
32526	26	1 3/4	1 5/16	1 5/16	15/16	1 3/16	57/64	-
32527	27	1 3/4	1 7/16	1 7/16	15/16	1 3/16	29/32	-
32528	28	1 3/4	1 7/16	1 7/16	31/32	1 9/32	15/16	-
32529	29	1 3/4	1 1/2	1 1/2	31/32	1 9/32	31/32	-
32530	30	1 3/4	1 9/16	1 9/16	31/32	1 11/32	63/64	-
32532	32	1 31/32	1 11/16	1 31/32	1 1/8	1 1/2	1 1/32	-
32536	36	2 1/16	1 15/16	1 15/16	7/8	1 7/16	1 13/32	-

Fed. Spec: ANSI B107.5

32941

32941 10 Piece 1/2" Drive Shallow 6 Point Socket Set on Clip Rail

Contents Include:

Product Code	Size (MM)	Product Code	Size (MM)	Product Code	Size (MM)
32510	10	32514	14	32518	18
32511	11	32515	15	32519	19
32512	12	32516	16		
32513	13	32517	17		

32943 16 Piece 1/2" Drive Shallow 6 Point Socket Set on Clip Rail

Contents Include:

Product Code	Size (MM)	Product Code	Size (MM)	Product Code	Size (MM)	Product Code	Size (MM)
32509	9	32513	13	32517	17	32521	21
32510	10	32514	14	32518	18	32522	22
32511	11	32515	15	32519	19	32523	23
32512	12	32516	16	32520	20	32524	24

Features

- SUPERTORQUE® lobular openings for greater turning power without deforming the fastener.
- Designed for quick engagement on both 6 and 12 point fasteners.

32943

WILLIAMS®

12 M

1/2" DRIVE DEEP SOCKETS, 12 POINT, METRIC

High-Polished Chrome Finish

		A	B	C	D	E		F
Product Code	Size (MM)	OAL (Inches)	Drive End Diameter (Inches)	Working End Diameter (Inches)	Broach Depth (Inches)	Bolt Clearance Depth (Inches)	Bolt Clearance Diameter (Inches)	Nose Length (Inches)
SMD-1213	13	3 1/4	29/32	25/32	13/32	2 15/32	15/32	2 19/32
SMD-1214	14	3 1/4	29/32	27/32	13/32	2 15/32	15/32	2 19/32
SMD-1215	15	3 1/4	29/32	7/8	13/32	2 15/32	15/32	-
SMD-1216	16	3 1/4	29/32	29/32	15/32	2 7/16	17/32	-
SMD-1217	17	3 1/4	31/32	31/32	1/2	2 11/32	5/8	-
SMD-1218	18	3 1/4	1	1	17/32	2 11/32	21/32	-
SMD-1219	19	3 1/4	1 1/32	1 1/32	9/16	2 5/16	11/16	-
SMD-1221	21	3 1/4	1 1/8	1 1/8	21/32	2 5/16	3/4	-
SMD-1222	22	3 1/4	1 3/16	1 3/16	23/32	2 9/32	13/16	-
SMD-1224	24	3 1/4	1 9/32	1 9/32	3/4	2 9/32	7/8	-
SMD-1227	27	3 1/4	1 7/16	1 7/16	3/4	2 1/4	1	-
SMD-1230	30	3 1/4	1 5/8	1 5/8	13/16	2 1/4	1 3/32	-

Fed. Spec: ANSI B107.5

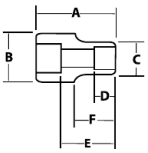

SMD-1218

MSSD-12RC 12 Piece 1/2" Drive Deep 12 Point Socket Set on Clip Rail

Contents Include:

Product Code	Size (MM)	Product Code	Size (MM)	Product Code	Size (MM)
SMD-1213	13	SMD-1217	17	SMD-1222	22
SMD-1214	14	SMD-1218	18	SMD-1224	24
SMD-1215	15	SMD-1219	19	SMD-1227	27
SMD-1216	16	SMD-1221	21	SMD-1230	30

Made in U.S.A.

Features

- SUPERTORQUE® lobular openings for greater turning power without deforming the fastener.
- Designed for quick engagement on both 6 and 12 point fasteners.

MSSD-12RC

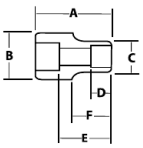

32817 327810

WILLIAMS®

12 M

1/2" DRIVE DEEP SOCKETS, 12 POINT, METRIC

High-Polished Chrome Finish

Product Code	Size (MM)	A OAL (Inches)	B Drive End Diameter (Inches)	C Working End Diameter (Inches)	D Broach Depth (Inches)	E Bolt Clearance Depth (Inches)	Bolt Clearance Diameter (Inches)	F Nose Length (Inches)
32809	9	3 1/4	29/32	19/32	5/16	2 15/32	11/32	2 19/32
32810	10	3 1/4	29/32	19/32	5/16	2 15/32	11/32	2 19/32
32811	11	3 1/4	29/32	11/16	5/16	2 15/32	13/32	2 19/32
32812	12	3 1/4	29/32	23/32	13/32	2 15/32	7/16	2 19/32
32813	13	3 1/4	29/32	25/32	3/8	2 15/32	15/32	2 19/32
32814	14	3 1/4	29/32	27/32	3/8	2 15/32	15/32	2 19/32
32815	15	3 1/4	29/32	7/8	3/8	2 11/32	15/32	-
32816	16	3 1/4	29/32	29/32	9/16	2 11/32	15/32	-
32817	17	3 1/4	31/32	31/32	9/16	2 11/32	15/32	-
32818	18	3 1/4	1	1	13/16	2 11/32	15/32	-
32819	19	3 1/4	1 1/32	1 1/32	13/16	2 5/16	23/32	-
32820	20	3 1/4	1 1/16	1 1/16	13/16	2 5/16	23/32	-
32821	21	3 1/4	1 1/8	1 1/8	13/16	2 5/16	3/4	-
32822	22	3 1/4	1 3/16	1 3/16	13/16	2 5/16	25/32	-
32823	23	3 1/4	1 1/4	1 1/4	25/32	2 5/16	27/32	-
32824	24	3 1/4	1 9/32	1 9/32	13/16	2 5/16	7/8	-
32825	25	3 1/4	1 5/16	1 5/16	13/16	2 1/4	15/16	-
32826	26	3 1/4	1 3/8	1 3/8	29/32	2 1/4	31/32	-
32827	27	3 1/4	1 7/16	1 7/16	31/32	2 1/4	1	-
32828	28	3 1/4	1 1/2	1 1/2	1	2 1/4	1 1/32	-
32829	29	3 1/4	1 9/16	1 9/16	1 1/32	2 1/4	1 1/16	-
32830	30	3 1/4	1 5/8	1 5/8	1 1/32	2 1/4	1 3/32	-
32832	32	3 1/4	1 11/16	1 11/16	1 1/8	2 1/4	1 3/16	-
32834	34	3 1/4	1 3/4	1 3/4	7/8	2 1/4	1	-
32836	36	3 1/4	1 15/16	1 15/16	7/8	2 1/4	1 13/32	-

Fed. Spec: ANSI B107.5

32951

32951 15 Piece 1/2" Drive Deep 12 Point Socket Set on Clip Rail

Contents Include:

Product Code	Size (MM)	Product Code	Size (MM)	Product Code	Size (MM)	Product Code	Size (MM)
32810	10	32814	14	32818	18	32822	22
32811	11	32815	15	32819	19	32823	23
32812	12	32816	16	32820	20	32824	24
32813	13	32817	17	32821	21		

32949

32949 24 Piece 1/2" Drive Deep 12 Point Socket Set on Clip Rail

Contents Include:

Product Code	Size (MM)	Product Code	Size (MM)	Product Code	Size (MM)	Product Code	Size (MM)
32810	10	32816	16	32822	22	32828	28
32811	11	32817	17	32823	23	32829	29
32812	12	32818	18	32824	24	32830	30
32813	13	32819	19	32825	25	32832	32
32814	14	32820	20	32826	26	32834	34
32815	15	32821	21	32827	27	32836	36

Features

- SUPERTORQUE® lobular openings for greater turning power without deforming the fastener.
- Designed for quick engagement on both 6 and 12 point fasteners.

WILLIAMS®

1/2" DRIVE DEEP SOCKETS, 6 POINT, METRIC

High-Polished Chrome Finish

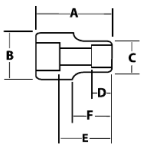

		A	B	C	D	E		F
Product Code	Size (MM)	OAL (Inches)	Drive End Diameter (Inches)	Working End Diameter (Inches)	Broach Depth (Inches)	Bolt Clearance Depth (Inches)	Bolt Clearance Diameter (Inches)	Nose Length (Inches)
32709	10	3 1/4	29/32	19/32	5/16	2 15/32	11/32	2 19/32
32710	10	3 1/4	29/32	19/32	5/16	2 15/32	11/32	2 19/32
32711	11	3 1/4	29/32	11/16	5/16	2 15/32	13/32	2 19/32
32712	12	3 1/4	29/32	23/32	13/32	2 15/32	7/16	2 19/32
32713	13	3 1/4	29/32	25/32	3/8	2 15/32	15/32	2 19/32
32714	14	3 1/4	29/32	27/32	3/8	2 15/32	15/32	2 19/32
32715	15	3 1/4	29/32	7/8	3/8	2 11/32	15/32	-
32716	16	3 1/4	29/32	29/32	9/16	2 11/32	15/32	-
32717	17	3 1/4	31/32	31/32	9/16	2 11/32	15/32	-
32718	18	3 1/4	1	1	13/16	2 11/32	15/32	-
32719	19	3 1/4	1 1/32	1 1/32	13/16	2 5/16	23/32	-
32720	20	3 1/4	1 1/16	1 1/16	13/16	2 5/16	23/32	-
32721	21	3 1/4	1 1/8	1 1/8	13/16	2 5/16	3/4	-
32722	22	3 1/4	1 3/16	1 3/16	13/16	2 5/16	25/32	-
32723	23	3 1/4	1 1/4	1 1/4	25/32	2 5/16	27/32	-
32724	24	3 1/4	1 9/32	1 9/32	13/16	2 5/16	7/8	-
32725	25	3 1/4	1 5/16	1 5/16	13/16	2 1/4	15/16	-
32726	26	3 1/4	1 3/8	1 3/8	29/32	2 1/4	31/32	-
32727	27	3 1/4	1 7/16	1 7/16	31/32	2 1/4	1	-
32728	28	3 1/4	1 1/2	1 1/2	1	2 1/4	1 1/32	-
32729	29	3 1/4	1 9/16	1 9/16	1 1/32	2 1/4	1 1/16	-
32730	30	3 1/4	1 5/8	1 5/8	1 1/32	2 1/4	1 3/32	-
32732	32	3 1/4	1 11/16	1 11/16	1 1/8	2 1/4	1 3/16	-
32734	34	3 1/4	1 3/4	1 3/4	7/8	2 1/4	1	-
32736	36	3 1/4	1 15/16	1 15/16	7/8	2 1/4	1 13/32	-

Fed. Spec: ANSI B107.5

32717 32710

32947 15 Piece 1/2" Drive Deep 6 Point Socket Set on Clip Rail

Contents Include:

Product Code	Size (MM)	Product Code	Size (MM)	Product Code	Size (MM)	Product Code	Size (MM)
32710	10	32714	14	32718	18	32722	22
32711	11	32715	15	32719	19	32723	23
32712	12	32716	16	32720	20	32724	24
32713	13	32717	17	32721	21		

32947

32945 24 Piece 1/2" Drive Deep 6 Point Socket Set on Clip Rail

Contents Include:

Product Code	Size (MM)	Product Code	Size (MM)	Product Code	Size (MM)	Product Code	Size (MM)
32710	10	32716	16	32722	22	32728	28
32711	11	32717	17	32723	23	32729	29
32712	12	32718	18	32724	24	32730	30
32713	13	32719	19	32725	25	32732	32
32714	14	32720	20	32726	26	32734	34
32715	15	32721	21	32727	27	32736	36

32945

Features

- SUPERTORQUE® lobular openings for greater turning power without deforming the fastener.
- Designed for quick engagement on both 6 and 12 point fasteners.

WILLIAMS®

TS50750

TS51551

TSFS5005

TSM5107

1/2" DRIVE TURBOSOCKET® SALVAGE/DAMAGED FASTENER SOCKETS

Black Industrial Finish, Metric and SAE

Product Code	Size (Inches)	A OAL (Inches)	B Drive End Diameter (Inches)	C Working End Diameter (Inches)	D Broach Depth (Inches)	E Bolt Clearance Depth (Inches)	Bolt Clearance Diameter (Inches)	F Nose Length (Inches)
TS50750	3/4	1 21/32	1 1/16	1 1/16	23/32	1	3/4	-
TS50812	13/16	1 21/32	1 1/8	1 1/8	23/32	1	13/16	-
TS50875	7/8	1 21/32	1 3/16	1 3/16	23/32	1	7/8	-
TS50937	15/16	1 21/32	1 5/16	1 5/16	23/32	1	15/16	-
TS50100	1	1 21/32	1 11/32	1 11/32	23/32	1	1	-

Product Code	Size (MM)	OAL (Inches)	Drive End Diameter (Inches)	Working End Diameter (Inches)	Broach Depth (Inches)	Bolt Clearance Depth (Inches)	Bolt Clearance Diameter (Inches)	Nose Length (Inches)
TS51551	14	1 21/32	29/32	27/32	1/2	1	9/16	29/32
TS51591	15	1 21/32	29/32	29/32	1/2	1	19/32	-
TS51625	16	1 21/32	31/32	31/32	1/2	23/32	5/8	-
TS51669	17	1 21/32	1	1	21/32	23/32	11/16	-
TS51709	18	1 21/32	1 1/32	1 1/32	21/32	23/32	23/32	-
TS51750	19	1 21/32	1 1/16	1 1/16	23/32	1	3/4	-
TS51827	21	1 21/32	1 3/16	1 3/16	21/32	1	27/32	-

TSFS5005 5 Piece TURBOSOCKET® Salvage Socket Set on Clip Rail, SAE
Contents Include:

Product Code	Size (Inches)	Product Code	Size (Inches)
TS50750	3/4	TS50937	15/16
TS50812	13/16	TS50100	1
TS50875	7/8		

TSMS5107 7 Piece TURBOSOCKET® Salvage Socket Set on Clip Rail, Metric
Contents Include:

Product Code	Size (MM)	Product Code	Size (MM)
TS51551	14	TS51709	18
TS51591	15	TS51750	19 (3/4")
TS51625	16 (5/8")	TS51827	21
TS51669	17		

Features
- Quickly and easily remove damaged or rounded nuts and bolts.
- Place socket on fastener and turn with ratchet, breaker bar or T-handle.
- Grip on fastener tightens as more torque is applied.
- No hammering is required to install socket over fastener.
- Use on all types of standard nuts and bolts as well as studs, pipe nipples, and corroded auto and marine fasteners.
- May be used for "best fit" on metric and fractional fasteners.
- May be used with air or electric impact wrench for extra speed and turning power.

USA Made in U.S.A.

WILLIAMS®

SA-16A

WSSS-6RC

1/2" DRIVE STANDARD LENGTH HEX BIT SOCKETS, SAE

High-Polished Chrome Finish

Product Code	Size (Inches)	Socket Length (Inches)	Socket Outside Diameter (Inches)	Overall Length (Inches)	Replacement Bit Product Code
SA-8A	1/4	1 1/2	29/32	2 1/4	BITH08-05
SA-10A	5/16	1 1/2	29/32	2 1/4	BITH10-05
SA-12A	3/8	1 1/2	29/32	2 1/4	BITH12-03
SA-16A	1/2	1 1/2	31/32	2 1/4	BITH16-01
SA-18A	9/16	1 9/16	1 1/16	2 1/4	BITH18-01
SA-20A	5/8	1 25/32	1 1/4	2 1/4	BITH20-01

WSSS-6RC 6 Piece Hex Bit Socket Set on Clip Rail
Contents Include:

Product Code	Size (Inches)	Product Code	Size (Inches)
SA-8A	1/4	SA-16A	1/2
SA-10A	5/16	SA-18A	9/16
SA-12A	3/8	SA-20A	5/8

Features
- High-polished chrome finish socket cleans easily.
- Two piece design allows bits to be replaced easily.

USA Made in U.S.A.

WILLIAMS

1/2" DRIVE STANDARD LENGTH HEX BIT SOCKETS, SAE

High-Polished Chrome Finish

Product Code	Size (Inches)	Socket Length (Inches)	Socket Outside Diameter (Inches)	Overall Length (Inches)	Bit Length (Inches)
35208	1/4	1 7/16	29/32	2 13/32	27/32
35210	5/16	1 7/16	29/32	2 13/32	27/32
35212	3/8	1 7/16	29/32	2 13/32	27/32
35214	7/16	1 7/16	29/32	2 13/32	27/32
35202	1/2	1 19/32	7/8	2 13/32	27/32
35203	9/16	1 19/32	1	2 13/32	27/32
35204	5/8	1 19/32	1 1/16	2 13/32	27/32
35206	3/4	1 19/32	1 3/16	2 13/32	27/32

35202

32902 4 Piece Hex Bit Socket Set on Clip Rail

Contents Include:

Product Code	Size (Inches)	Product Code	Size (Inches)
35202	1/2	35204	5/8
35203	9/16	35206	3/4

32902

32903 8 Piece Hex Bit Socket Set on Clip Rail

Contents Include:

Product Code	Size (Inches)	Product Code	Size (Inches)	Product Code	Size (Inches)
35208	1/4	35214	7/16	35204	5/8
35210	5/16	35202	1/2	35206	3/4
35212	3/8	35203	9/16		

32903

Features

- High-polished chrome finish socket cleans easily.

WILLIAMS

1/2" DRIVE STANDARD LENGTH HEX BIT SOCKETS, METRIC

High-Polished Chrome Finish

Product Code	Size (MM)	Socket Length (Inches)	Socket Outside Diameter (Inches)	Overall Length (Inches)	Bit Length (Inches)
35274	8	1 19/32	29/32	2 13/32	27/32
35275	10	1 19/32	29/32	2 7/16	27/32
35276	12	1 19/32	29/32	2 7/16	27/32
35277	14	1 19/32	1	2 7/16	27/32
35278	17	1 19/32	1 3/32	2 7/16	27/32
35279	19	1 19/32	1 3/16	2 7/16	27/32

35274

32904 6 Piece Hex Bit Socket Set on Clip Rail

Contents Include:

Product Code	Size (MM)	Product Code	Size (MM)
35274	8	35277	14
35275	10	35278	17
35276	12	35279	19

32904

Features

- High-polished chrome finish socket cleans easily.

SA-16LA

WSSS-6LRC

35232

32957

32955

35294

32953

WILLIAMS®

1/2" DRIVE LONG HEX BIT SOCKETS, SAE

High-Polished Chrome Finish

Product Code	Size (Inches)	Socket Length (Inches)	Socket Outside Diameter (Inches)	Overall Length (Inches)	Replacement Bit Product Code
SA-8LA	1/4	1 1/2	29/32	4 1/2	BITH08-06
SA-10LA	5/16	1 1/2	29/32	4 1/2	BITH10-06
SA-12LA	3/8	1 1/2	29/32	4 1/2	BITH12-04
SA-16LA	1/2	1 1/2	31/32	4 1/2	BITH16-02
SA-18LA	9/16	1 9/16	1 1/16	4 1/2	BITH18-02
SA-20LA	5/8	1 25/32	1 1/4	4 1/2	BITH20-02

WSSS-6LRC 6 Piece Long Hex Bit Socket Set on Clip Rail

Contents Include:

Product Code	Size (Inches)	Product Code	Size (Inches)
SA-8LA	1/4	SA-16LA	1/2
SA-10LA	5/16	SA-18LA	9/16
SA-12LA	3/8	SA-20LA	5/8

Features
- High-polished chrome finish socket cleans easily.
- Two piece design allows bits to be replaced easily.

Made in U.S.A.

WILLIAMS®

1/2" DRIVE LONG LENGTH HEX BIT SOCKETS, SAE

High-Polished Chrome Finish

Product Code	Size (Inches)	Socket Length (Inches)	Socket Outside Diameter (Inches)	Overall Length (Inches)
35238	1/4	1 1/2	29/32	4 1/2
35240	5/16	1 1/2	29/32	4 1/2
35242	3/8	1 1/2	29/32	4 1/2
35244	7/16	1 1/2	29/32	4 1/2
35232	1/2	1 1/2	7/8	4 1/2
35233	9/16	1 9/16	1	4 1/2
35234	5/8	1 25/32	1 1/16	4 1/2
35236	3/4	1 25/32	1 3/16	4 1/2

32957 4 Piece Hex Bit Socket Set on Clip Rail

Contents Include:

Product Code	Size (Inches)	Product Code	Size (Inches)
35202	1/2	35204	5/8
35203	9/16	35206	3/4

32955 8 Piece Hex Bit Socket Set on Clip Rail

Contents Include:

Product Code	Size (Inches)	Product Code	Size (Inches)	Product Code	Size (Inches)
35208	1/4	35214	7/16	35204	5/8
35210	5/16	35202	1/2	35206	3/4
35212	3/8	35203	9/16		

Features
- High-polished chrome finish socket cleans easily.

WILLIAMS®

1/2" DRIVE LONG LENGTH HEX BIT SOCKETS, METRIC

High-Polished Chrome Finish

Product Code	Size (MM)	Socket Length (Inches)	Socket Outside Diameter (Inches)	Overall Length (Inches)
35294	8	1 1/2	29/32	4 1/2
35295	10	1 1/2	29/32	4 1/2
35296	12	1 1/2	29/32	4 1/2
35297	14	1 1/2	1	4 1/2
35298	17	1 1/2	1 3/32	4 1/2
35299	19	1 1/2	1 3/16	4 1/2

32953 6 Piece Hex Bit Socket Set on Clip Rail

Contents Include:

Product Code	Size (MM)	Product Code	Size (MM)
35294	8	35297	14
35295	10	35298	17
35296	12	35299	19

Features
- High-polished chrome finish socket cleans easily.

WILLIAMS®

1/2" DRIVE TORX® BIT SOCKETS

High-Polished Chrome Finish

Product Code	Torx® Size	Socket Length (Inches)	Socket Outside Diameter (Inches)	Overall Length (Inches)	Bit Length (Inches)
35283	T40	1 19/32	29/32	2 7/16	7/8
35284	T45	1 19/32	29/32	2 7/16	7/8
35285	T50	1 19/32	29/32	2 7/16	7/8
35286	T55	1 19/32	29/32	2 7/16	7/8
35287	T60	1 19/32	29/32	2 7/16	7/8

35283

32908 5 Piece Torx® Bit Socket Set on Clip Rail
Contents Include:

Product Code	Torx® Size	Product Code	Torx® Size
35283	T40	35286	T55
35284	T45	35287	T60
35285	T50		

32908

Features
- High-polished chrome finish socket cleans easily.

WILLIAMS®

1/2" DRIVE SCREWDRIVER BIT SOCKETS

High-Polished Chrome Finish, Phillips® and Slotted

Product Code	Size (Inches) / Point Size	Socket Length (Inches)	Socket Outside Diameter (Inches)	Overall Length (Inches)	Replacement Bit Product Code
Slotted Bits:					
SA-10A-3S	23/64 x .061	1 1/2	29/32	2 9/32	BITHS03
SA-12A-4S	27/64 x .075	1 1/2	29/32	2 1/4	BITHS04
Phillips® Bits:					
SA-10A-3P	#3	1 1/2	29/32	2 1/4	BITPH03-02
SA-12A-4P	#4	1 1/2	29/32	2 1/4	BITPH04-01

SA-10A-3P

SA-10A-3S

WSSSP-4RC 4 Piece Screwdriver Bit Socket Set on Clip Rail
Contents Include:

Product Code	Tip Size	Product Code	Tip Size
SA-10A-3S	23/64 x.061	SA-10A-3P	3
SA-12A-4S	27/64 x.075	SA-12A-4P	4

WSSP-4RC

Features
- High-polished chrome finish socket cleans easily.
- Two piece design allows bits to be replaced easily.

Made in U.S.A.

WILLIAMS®

1/2" DRIVE PHILLIPS® SCREWDRIVER BIT SOCKETS

High-Polished Chrome Finish

Product Code	Tip Size	Socket Length (Inches)	Socket Outside Diameter (Inches)	Overall Length (Inches)	Bit Length (Inches)
Phillips® Bits:					
35251	#2	1 19/32	29/32	2 7/16	7/8
35252	#3	1 19/32	29/32	2 7/16	7/8
35253	#4	1 19/32	29/32	2 7/16	7/8

35251

32906 3 Piece Phillips® Screwdriver Bit Socket Set on Clip Rail
Contents Include:

Product Code	Tip Size
35251	#2
35252	#3
35253	#4

32906

Features
- High-polished chrome finish socket cleans easily.

WILLIAMS®

1/2" DRIVE DRAG LINK SOCKETS

High-Polished Chrome Finish

Product Code	Overall Length (Inches)	Tip Thickness (Inches)	Tip Width (Inches)
SB-30	1 5/8	5/32	15/16
SB-40	1 11/16	5/32	1 13/16

SB-30

Fed. Spec: ANSI B107.1

Features
- Ideal for drag links on trucks and heavy equipment, as well as large screws.

Made in U.S.A.

WILLIAMS®

1/2" DRIVE IMPACT EXTENSIONS AND ACCESSORIES

Black Industrial Finish

Product Code	Description	Length (Inches)	Socket Retention
4-102	Impact Extension	3 1/2	Lock Ring
4-105A	Impact Extension	5	Spring Plunger
4-110A	Impact Extension	10	Spring Plunger
4-140B	Impact Universal Joint	2 1/2	Spring Plunger
4-2A	3/8" M x 1/2" F Adapter	2 1/4	Spring Plunger
4-6	3/4" M x 1/2" F Adapter	1 1/4	Through Hole

Fed. Spec: ANSI B107.2

USA Made in U.S.A.

Features

- Specially heat treated for impact use to provide long life, safety, and durability.
- Spring plunger provides secure socket retention for safety and convenience.
- Suitable for use with pneumatic and electric impact wrenches.

WILLIAMS®

1/2" DRIVE HEX TO SQUARE SHANK IMPACT EXTENSIONS

Black Industrial Finish

Product Code	Hex Shank Size (Inches)	Square Drive Size (Inches)	Length (Inches)
4-33B	7/16	1/2	2 3/4
4-35B	7/16	1/2	5
4-53B	5/8	1/2	2 3/4

USA Made in U.S.A.

Features

- Specially heat treated for impact use to provide long life, safety, and durability.
- Spring plunger provides secure socket retention for safety and convenience.
- Suitable for use with pneumatic and electric impact wrenches.

WILLIAMS®

1/2" DRIVE IMPACT EXTENSIONS AND ACCESSORIES

Black Industrial Finish

Product Code	Description	Length (Inches)	Socket Retention
37002	Impact Extension	3	Ball
37003	Impact Extension	6	Ball
37004	Impact Extension	10	Ball
37001	Impact Universal Joint	2 9/16	Ball
37005	1/2" F x 3/8" M Adapter	1 7/8	Ball

Fed. Spec: ANSI B107.2

Features

- Specially heat treated for impact use to provide long life, safety, and durability.
- Ball socket retention for fast socket changes.
- Suitable for use with pneumatic and electric impact wrenches.
- Drive end features pin retention hole and groove.

WILLIAMS

1/2" DRIVE SHALLOW IMPACT SOCKETS, 6 POINT, SAE

Black Industrial Finish

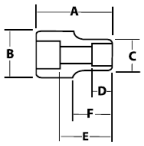

		A	B	C	D	E		F
Product Code	Size (Inches)	OAL (Inches)	Drive End Diameter (Inches)	Working End Diameter (Inches)	Broach Depth (Inches)	Bolt Clearance Depth (Inches)	Bolt Clearance Diameter (Inches)	Nose Length (Inches)
4-612	3/8	1 1/2	29/32	19/32	1/4	7/8	11/32	11/16
4-614	7/16	1 1/2	29/32	23/32	5/16	7/8	13/32	11/16
4-616	1/2	1 1/2	29/32	13/16	13/32	7/8	15/32	11/16
4-618	9/16	1 1/2	29/32	7/8	13/32	7/8	15/32	11/16
4-620	5/8	1 1/2	31/32	31/32	15/32	7/8	1/2	-
4-622	11/16	1 1/2	1 1/16	1 1/16	13/16	27/32	5/8	-
4-624	3/4	1 1/2	1 1/8	1 1/8	13/16	27/32	11/16	-
4-626	13/16	1 1/2	1 1/4	1 1/4	13/16	13/16	25/32	-
4-628	7/8	1 1/2	1 5/16	1 5/16	13/16	13/16	7/8	-
4-630	15/16	1 3/4	1 3/8	1 3/8	1 1/32	1 1/16	15/16	-
4-632	1	1 3/4	1 7/16	1 7/16	1 1/32	1 1/16	1	-
4-634	1 1/16	2	1 9/16	1 9/16	1 1/4	1 9/32	1 1/32	-
4-636	1 1/8	2	1 5/8	1 5/8	1 1/4	1 9/32	1 1/8	-
4-638	1 3/16	2	1 11/16	1 11/16	1 1/4	1 9/32	1 5/32	-
4-640	1 1/4	2	1 3/4	1 3/4	13/16	1 9/32	1 7/32	-
4-642	1 5/16	2	1 1/2	1 7/8	7/8	1 3/8	1 1/16	-
4-644	1 3/8	2	1 1/2	1 15/16	7/8	1 3/8	1 1/16	-
4-646	1 7/16	2	1 1/2	2	29/32	1 3/8	1 1/16	-
4-648	1 1/2	2	1 9/16	2 1/8	29/32	1 3/8	1 1/16	-

Fed. Spec: ANSI B107.2

4-612, 4-624

WS-4-7RC 7 Piece 1/2" Drive Shallow 6 Point Impact Socket Set on Clip Rail
Contents Include:

Product Code	Size (Inches)	Product Code	Size (Inches)
4-614	7/16	4-622	11/16
4-616	1/2	4-624	3/4
4-618	9/16	4-626	13/16
4-620	5/8		

WS-4-7RC

WS-4-11RC 11 Piece 1/2" Drive Shallow 6 Point Impact Socket Set on Clip Rail
Contents Include:

Product Code	Size (Inches)	Product Code	Size (Inches)	Product Code	Size (Inches)
4-616	1/2	4-624	3/4	4-632	1
4-618	9/16	4-626	13/16	4-634	1 1/16
4-620	5/8	4-628	7/8	4-636	1 1/8
4-622	11/16	4-630	15/16		

WS-4-11RC

WS-4-14 14 Piece 1/2" Drive Shallow 6 Point Impact Socket Set on Clip Rail
Contents Include:

Product Code	Size (Inches)	Product Code	Size (Inches)	Product Code	Size (Inches)
4-612	3/8	4-622	11/16	4-632	1
4-614	7/16	4-624	3/4	4-634	1 1/16
4-616	1/2	4-626	13/16	4-636	1 1/8
4-618	9/16	4-628	7/8	4-640	1 1/4
4-620	5/8	4-630	15/16		

WS-4-14

WS-4-19RC 19 Piece 1/2" Drive Shallow 6 Point Impact Socket Set on Clip Rail
Contents Include:

Product Code	Size (Inches)	Product Code	Size (Inches)	Product Code	Size (Inches)	Product Code	Size (Inches)
4-612	3/8	4-622	11/16	4-632	1	4-642	1 5/16
4-614	7/16	4-624	3/4	4-634	1 1/16	4-644	1 3/8
4-616	1/2	4-626	13/16	4-636	1 1/8	4-646	1 7/16
4-618	9/16	4-628	7/8	4-638	1 3/16	4-648	1 1/2
4-620	5/8	4-630	15/16	4-640	1 1/4		

WS-4-19RC

Features

Made in U.S.A.

- SUPERTORQUE® lobular openings for greater turning power without deforming the fastener.
- Designed for maximum engagement on 6 point fasteners.
- Suitable for use with pneumatic and electric impact wrenches.
- Specially heat treated for impact use to provide long life, safety, and durability.

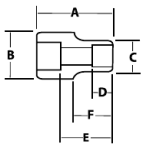

37112, 37124

37902

37904

37224

37918

WILLIAMS®

1/2" DRIVE SHALLOW IMPACT SOCKETS, 6 POINT, SAE

Black Industrial Finish

Product Code	Size (Inches)	A OAL (Inches)	B Drive End Diameter (Inches)	C Working End Diameter (Inches)	D Broach Depth (Inches)	E Bolt Clearance Depth (Inches)	Bolt Clearance Diameter (Inches)	F Nose Length (Inches)
37112	3/8	1 1/2	15/16	5/8	9/16	7/8	5/16	3/4
37114	7/16	1 1/2	15/16	23/32	9/16	13/16	13/32	3/4
37116	1/2	1 1/2	15/16	13/16	9/16	21/32	15/32	3/4
37118	9/16	1 1/2	15/16	7/8	9/16	27/32	17/32	3/4
37120	5/8	1 1/2	1	31/32	1/2	29/32	9/16	3/4
37122	11/16	1 1/2	1 1/8	1 1/32	17/32	29/32	21/32	3/4
37124	3/4	1 1/2	1 1/8	1 1/8	3/4	29/32		-
37126	13/16	1 1/2	1 3/16	1 3/16	3/4	29/32		-
37128	7/8	1 1/2	1 1/4	1 1/4	3/4	15/16		-
37130	15/16	1 3/4	1 3/8	1 3/8	1	1 7/32		-
37132	1	1 3/4	1 1/2	1 1/2	1	1 7/32		-
37134	1 1/16	1 3/4	1 17/32	1 17/32	1	1 7/32		-
37136	1 1/8	1 3/4	1 5/8	1 5/8	1	1 3/16		-
37138	1 3/16	1 3/4	1 5/8	1 5/8	1	1 3/16		-
37140	1 1/4	1 3/4	1 3/4	1 3/4	1	1 5/32		-

Fed. Spec: ANSI B107.2

37902 9 Piece 1/2" Drive Shallow 6 Point Impact Socket Set on Clip Rail
Contents Include:

Product Code	Size (Inches)	Product Code	Size (Inches)	Product Code	Size (Inches)
37116	1/2	37122	11/16	37128	7/8
37118	9/16	37124	3/4	37130	15/16
37120	5/8	37126	13/16	37132	1

37904 14 Piece 1/2" Drive Shallow 6 Point Impact Socket Set on Clip Rail
Contents Include:

Product Code	Size (Inches)	Product Code	Size (Inches)	Product Code	Size (Inches)
37112	3/8	37122	11/16	37132	1
37114	7/16	37124	3/4	37134	1 1/16
37116	1/2	37126	13/16	37136	1 1/8
37118	9/16	37128	7/8	37140	1 1/4
37120	5/8	37130	15/16		

Features
- SUPERTORQUE® lobular openings for greater turning power without deforming the fastener.
- Designed for maximum engagement on 6 point fasteners.
- Suitable for use with pneumatic and electric impact wrenches.
- Specially heat treated for impact use to provide long life, safety, and durability.
- Drive end features pin retention hole and groove.

WILLIAMS®

1/2" DRIVE UNIVERSAL IMPACT SOCKETS, 6 POINT, SAE

Black Industrial Finish

Product Code	Size (Inches)	A OAL (Inches)	B Drive End Diameter (Inches)	C Working End Diameter (Inches)	D Broach Depth (Inches)	E Bolt Clearance Depth (Inches)	Bolt Clearance Diameter (Inches)	F Nose Length (Inches)
37216	1/2	2 3/4	1	3/4	3/8	9/16	7/16	1
37218	9/16	2 3/4	1	3/4	3/8	9/16	7/16	1
37220	5/8	2 3/4	1	3/4	3/8	9/16	9/16	1
37222	11/16	2 3/4	1 1/4	1	1/2	11/16	11/16	1 1/4
37224	3/4	2 3/4	1 1/4	1	1/2	11/16	11/16	1 1/4
37226	13/16	3	1 1/4	1 1/4	5/8	13/16	13/16	1 1/2
37228	7/8	3	1 1/4	1 1/4	5/8	13/16	13/16	1 1/2

Fed. Spec: ANSI B107.2

37918 7 Piece 1/2" Drive Universal 6 Point Impact Socket Set on Clip Rail
Contents Include:

Product Code	Size (Inches)	Product Code	Size (Inches)	Product Code	Size (Inches)
37216	1/2	37222	11/16	37228	7/8
37218	9/16	37224	3/4		
37220	5/8	37226	13/16		

Features
- SUPERTORQUE® lobular openings for greater turning power without deforming the fastener
- Designed for maximum engagement on 6 point fasteners
- Suitable for use with pneumatic and electric impact wrenches
- Specially heat treated for impact use to provide long life, safety, and durability
- Drive end features pin retention hole and groove

WILLIAMS

1/2" DRIVE DEEP IMPACT SOCKETS, 6 POINT, SAE

Black Industrial Finish

Product Code	Size (Inches)	A OAL (Inches)	B Drive End Diameter (Inches)	C Working End Diameter (Inches)	D Broach Depth (Inches)	E Bolt Clearance Depth (Inches)	Bolt Clearance Diameter (Inches)	F Nose Length (Inches)
14-612	3/8	3 1/4	29/32	19/32	5/16	2 5/8	11/32	2 15/32
14-614	7/16	3 1/4	29/32	23/32	11/32	2 5/8	13/32	2 15/32
14-616	1/2	3 1/4	29/32	13/16	13/32	2 5/8	15/32	2 15/32
14-618	9/16	3 1/4	29/32	7/8	13/32	2 5/8	15/32	2 15/32
14-620	5/8	3 1/4	31/32	31/32	15/32	2 7/16	5/8	-
14-622	11/16	3 1/4	1 1/16	1 1/16	1/2	2	5/8	-
14-624	3/4	3 1/4	1 1/8	1 1/8	9/16	2	11/16	-
14-626	13/16	3 1/4	1 1/4	1 1/4	5/8	2	25/32	-
14-628	7/8	3 1/2	1 5/16	1 5/16	9/16	2 1/4	7/8	-
14-630	15/16	3 1/2	1 3/8	1 3/8	3/4	2 1/4	15/16	-
14-632	1	3 1/2	1 7/16	1 7/16	3/4	2 1/4	1	-
14-634	1 1/16	3 1/2	1 9/16	1 9/16	25/32	2 1/4	1 1/32	-
14-636	1 1/8	3 1/2	1 5/8	1 5/8	13/16	2 1/4	1 1/8	-
14-638	1 3/16	3 1/2	1 11/16	1 11/16	13/16	2 1/4	1 3/16	-
14-640	1 1/4	3 1/2	1 3/4	1 3/4	1	2 21/32	1 1/4	-
14-642	1 5/16	3 1/2	1 1/2	1 7/8	15/16	2 7/8	1 1/16	-
14-644	1 3/8	3 1/2	1 1/2	2	29/32	2 7/8	1 1/16	-
14-646	1 7/16	3 1/2	1 1/2	2	29/32	2 7/8	1 1/16	-
14-648	1 1/2	3 1/2	1 9/16	2 1/8	29/32	2 7/8	1 1/16	-

Fed. Spec: ANSI B107.2

14-612, 14-624

WS-14-11 11 Piece 1/2" Drive Deep 6 Point Impact Socket Set on Clip Rail
Contents Include:

Product Code	Size (Inches)	Product Code	Size (Inches)	Product Code	Size (Inches)
14-612	3/8	14-620	5/8	14-628	7/8
14-614	7/16	14-622	11/16	14-630	15/16
14-616	1/2	14-624	3/4	14-632	1
14-618	9/16	14-626	13/16		

WS-14-11

WS-14-14RC 14 Piece 1/2" Drive Deep 6 Point Impact Socket Set on Clip Rail
Contents Include:

Product Code	Size (Inches)	Product Code	Size (Inches)	Product Code	Size (Inches)
14-612	3/8	14-622	11/16	14-632	1
14-614	7/16	14-624	3/4	14-634	1 1/16
14-616	1/2	14-626	13/16	14-636	1 1/8
14-618	9/16	14-628	7/8	14-640	1 1/4
14-620	5/8	14-630	15/16		

WS-14-14RC

WS-14-19RC 19 Piece 1/2" Drive Deep 6 Point Impact Socket Set on Clip Rail
Contents Include:

Product Code	Size (Inches)	Product Code	Size (Inches)	Product Code	Size (Inches)	Product Code	Size (Inches)
14-612	3/8	14-622	11/16	14-632	1	14-642	1 5/16
14-614	7/16	14-624	3/4	14-634	1 1/16	14-644	1 3/8
14-616	1/2	14-626	13/16	14-636	1 1/8	14-646	1 7/16
14-618	9/16	14-628	7/8	14-638	1 3/16	14-648	1 1/2
14-620	5/8	14-630	15/16	14-640	1 1/4		

WS-14-19RC

Features

Made in U.S.A.

- SUPERTORQUE® lobular openings for greater turning power without deforming the fastener.
- Designed for maximum engagement on 6 point fasteners.
- Suitable for use with pneumatic and electric impact wrenches.
- Specially heat treated for impact use to provide long life, safety, and durability.

37312, 37324

37906

37908

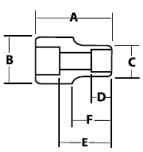

WILLIAMS®

1/2" DRIVE DEEP IMPACT SOCKETS, 6 POINT, SAE

Black Industrial Finish

Product Code	Size (Inches)	A OAL (Inches)	B Drive End Diameter (Inches)	C Working End Diameter (Inches)	D Broach Depth (Inches)	E Bolt Clearance Depth (Inches)	Bolt Clearance Diameter (Inches)	F Nose Length (Inches)
37312	3/8	3 1/4	15/16	5/8	1 3/32	2 1/4	11/32	3/4
37314	7/16	3 1/4	15/16	11/16	1	2 3/8	13/32	3/4
37316	1/2	3 1/4	15/16	25/32	1 3/32	2 3/8	7/16	3/4
37318	9/16	3 1/4	15/16	7/8	1 5/32	2 11/32	1/2	3/4
37320	5/8	3 1/4	1	31/32	1 5/16	2 7/16	9/16	3/4
37322	11/16	3 1/4	1 1/8	1	1 3/8	2 17/32	21/32	3/4
37324	3/4	3 1/4	1 1/8	1 1/8	1 5/16	2 9/16	23/32	-
37326	13/16	3 1/4	1 3/16	1 3/16	1 1/2	2 11/32	3/4	-
37328	7/8	3 1/2	1 1/4	1 1/4	1 15/32	2 21/32	27/32	-
37330	15/16	3 1/2	1 3/8	1 3/8	1 13/32	2 19/32	29/32	-
37332	1	3 1/2	1 1/2	1 1/2	1 15/32	2 5/8	15/16	-
37334	1 1/16	3 1/2	1 17/32	1 17/32	1 29/32	2 17/32	1 1/32	-
37336	1 1/8	3 1/2	1 5/8	1 5/8	1 7/16	2 7/16	1 1/16	-
37338	1 3/16	3 1/2	1 21/32	1 21/32	1 13/32	2 27/32	1 1/16	-
37340	1 1/4	3 1/2	1 3/4	1 3/4	1 7/16	2 3/4	1 1/16	-

Fed. Spec: ANSI B107.2

37906 9 Piece 1/2" Drive Deep 6 Point Impact Socket Set on Clip Rail
Contents Include:

Product Code	Size (Inches)	Product Code	Size (Inches)	Product Code	Size (Inches)
37316	1/2	37322	11/16	37328	7/8
37318	9/16	37324	3/4	37330	15/16
37320	5/8	37326	13/16	37332	1

37908 15 Piece 1/2" Drive Deep 6 Point Impact Socket Set on Clip Rail
Contents Include:

Product Code	Size (Inches)	Product Code	Size (Inches)	Product Code	Size (Inches)	Product Code	Size (Inches)
37312	3/8	37320	5/8	37328	7/8	37336	1 1/8
37314	7/16	37322	11/16	37330	15/16	37338	1 3/16
37316	1/2	37324	3/4	37332	1	37340	1 1/4
37318	9/16	37326	13/16	37334	1 1/16		

Features

- SUPERTORQUE® lobular openings for greater turning power without deforming the fastener.
- Designed for maximum engagement on 6 point fasteners.
- Suitable for use with pneumatic and electric impact wrenches.
- Specially heat treated for impact use to provide long life, safety, and durability.
- Drive end features pin retention hole and groove.

WILLIAMS®

1/2" DRIVE SHALLOW IMPACT SOCKETS, 6 POINT, METRIC

Black Industrial Finish

		A	B	C	D	E		F
Product Code	Size (MM)	OAL (Inches)	Drive End Diameter (Inches)	Working End Diameter (Inches)	Broach Depth (Inches)	Bolt Clearance Depth (Inches)	Bolt Clearance Diameter (Inches)	Nose Length (Inches)
4M-610	10	1 1/2	29/32	19/32	1/4	7/8	11/32	23/32
4M-611	11	1 1/2	29/32	23/32	5/16	7/8	13/32	23/32
4M-612	12	1 1/2	29/32	25/32	3/8	7/8	7/16	23/32
4M-613	13	1 1/2	29/32	27/32	13/32	7/8	15/32	23/32
4M-614	14	1 1/2	29/32	7/8	7/16	7/8	15/32	23/32
4M-615	15	1 1/2	15/16	15/16	7/16	7/8	15/32	-
4M-616	16	1 1/2	31/32	31/32	15/32	7/8	15/32	-
4M-617	17	1 1/2	1	1	1/2	7/8	15/32	-
4M-618	18	1 1/2	1 1/16	1 1/16	27/32	27/32	21/32	-
4M-619	19	1 1/2	1 1/8	1 1/8	13/16	27/32	11/16	-
4M-620	20	1 1/2	1 3/16	1 3/16	13/16	27/32	23/32	-
4M-621	21	1 1/2	1 1/4	1 1/4	13/16	27/32	3/4	-
4M-622	22	1 1/2	1 5/16	1 5/16	13/16	27/32	13/16	-
4M-623	23	1 3/4	1 5/32	1 5/32	1 1/32	1 3/32	27/32	-
4M-624	24	1 3/4	1 3/8	1 3/8	1 1/16	1 3/32	7/8	-
4M-625	25	1 3/4	1 7/16	1 7/16	1 1/16	1 3/32	29/32	-
4M-626	26	1 31/32	1 1/2	1 1/2	1 1/4	1 9/32	31/32	-
4M-627	27	1 31/32	1 9/16	1 9/16	1 1/4	1 9/32	1	-
4M-629	29	1 31/32	1 21/32	1 21/32	1 1/4	1 9/32	1 1/16	-
4M-630	30	1 31/32	1 11/16	1 11/16	1 1/4	1 9/32	1 3/32	-
4M-632	32	2	1 13/16	1 13/16	7/8	1 9/32	1 1/8	-
4M-634	34	2 1/16	1 11/16	1 7/8	29/32	1 7/16	1 11/32	-
4M-636	36	2 1/4	1 13/16	2	29/32	1 5/8	1 7/16	-

4M-621 4M-610

MS-4-10HRC 10 Piece 1/2" Drive Shallow 6 Point Impact Socket Set on Clip Rail

Contents Include:

Product Code	Size (MM)	Product Code	Size (MM)	Product Code	Size (MM)
4M-610	10	4M-614	14	4M-618	18
4M-611	11	4M-615	15	4M-619	19
4M-612	12	4M-616	16		
4M-613	13	4M-617	17		

MS-4-10HRC

MS-4-12HRC 12 Piece 1/2" Drive Shallow 6 Point Impact Socket Set on Clip Rail

Contents Include:

Product Code	Size (MM)	Product Code	Size (MM)	Product Code	Size (MM)
4M-613	13	4M-617	17	4M-622	22
4M-614	14	4M-618	18	4M-624	24
4M-615	15	4M-619	19	4M-627	27
4M-616	16	4M-621	21	4M-630	30

MS-4-12HRC

MS-4-16RC 16 Piece 1/2" Drive Shallow 6 Point Impact Socket Set on Clip Rail

Contents Include:

Product Code	Size (MM)	Product Code	Size (MM)	Product Code	Size (MM)	Product Code	Size (MM)
4M-610	10	4M-614	14	4M-618	18	4M-622	22
4M-611	11	4M-615	15	4M-619	19	4M-623	23
4M-612	12	4M-616	16	4M-620	20	4M-624	24
4M-613	13	4M-617	17	4M-621	21	4M-627	27

MS-4-16RC

MS-4-23RC 23 Piece 1/2" Drive Shallow 6 Point Impact Socket Set on Clip Rail

Contents Include:

Product Code	Size (MM)	Product Code	Size (MM)	Product Code	Size (MM)	Product Code	Size (MM)
4M-610	10	4M-616	16	4M-622	22	4M-629	29
4M-611	11	4M-617	17	4M-623	23	4M-630	30
4M-612	12	4M-618	18	4M-624	24	4M-632	32
4M-613	13	4M-619	19	4M-625	25	4M-634	34
4M-614	14	4M-620	20	4M-626	26	4M-636	36
4M-615	15	4M-621	21	4M-627	27		

MS-4-23RC

Features

- SUPERTORQUE® lobular openings for greater turning power without deforming the fastener.
- Designed for maximum engagement on 6 point fasteners.
- Suitable for use with pneumatic and electric impact wrenches.
- Specially heat treated for impact use to provide long life, safety, and durability.

Made in U.S.A.

37510 37521

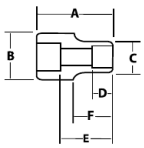

37910

37912

37819

37916

WILLIAMS®

1/2" DRIVE SHALLOW IMPACT SOCKETS, 6 POINT, METRIC

Black Industrial Finish

Product Code	Size (MM)	A OAL (Inches)	B Drive End Diameter (Inches)	C Working End Diameter (Inches)	D Broach Depth (Inches)	E Bolt Clearance Depth (Inches)	Bolt Clearance Diameter (Inches)	F Nose Length (Inches)
37510	10	1 1/2	1	5/8	9/16	7/8	3/8	23/32
37511	11	1 1/2	1	11/16	9/16	7/8	13/32	23/32
37512	12	1 1/2	1	3/4	9/16	7/8	7/16	23/32
37513	13	1 1/2	1	13/16	17/32	7/8	15/32	23/32
37514	14	1 1/2	1	7/8	17/32	7/8	17/32	23/32
37515	15	1 1/2	1 3/16	15/16	17/32	29/32	9/16	3/4
37516	16	1 1/2	1 3/16	1	17/32	7/8	19/32	3/4
37517	17	1 1/2	1 3/16	1 1/32	17/32	7/8	21/32	3/4
37518	18	1 1/2	1 3/16	1 3/32	13/16	7/8	21/32	3/4
37519	19	1 1/2	1 3/16	1 1/8	3/4	29/32	11/16	3/4
37521	21	1 1/2	1 3/16	1 3/16	25/32	15/16	3/4	-
37522	22	1 1/2	1 1/4	1 1/4	25/32	1 1/16	13/16	-
37524	24	1 3/4	1 3/8	1 3/8	1	1 3/16	7/8	-
37527	27	1 3/4	1 17/32	1 17/32	1	1 7/32	1	-

37910 10 Piece 1/2" Drive Shallow 6 Point Impact Socket Set on Clip Rail

Contents Include:

Product Code	Size (MM)	Product Code	Size (MM)	Product Code	Size (MM)
37510	10	37514	14	37518	18
37511	11	37515	15	37519	19
37512	12	37516	16		
37513	13	37517	17		

37912 14 Piece 1/2" Drive Shallow 6 Point Impact Socket Set on Clip Rail

Contents Include:

Product Code	Size (MM)	Product Code	Size (MM)	Product Code	Size (MM)	Product Code	Size (MM)
37510	10	37514	14	37518	18	37524	24
37511	11	37515	15	37519	19	37527	27
37512	12	37516	16	37521	21		
37513	13	37517	17	37522	22		

Features

- SUPERTORQUE® lobular openings for greater turning power without deforming the fastener.
- Designed for maximum engagement on 6 point fasteners.
- Suitable for use with pneumatic and electric impact wrenches.
- Specially heat treated for impact use to provide long life, safety, and durability.
- Drive end features pin retention hole and groove.

WILLIAMS®

1/2" DRIVE UNIVERSAL IMPACT SOCKETS, 6 POINT, METRIC

Black Industrial Finish

Product Code	Size (MM)	A OAL (Inches)	B Drive End Diameter (Inches)	C Working End Diameter (Inches)	D Broach Depth (Inches)	E Bolt Clearance Depth (Inches)	Bolt Clearance Diameter (Inches)	F Nose Length (Inches)
37813	13	2 3/4	1	3/4	3/8	1/2	1/2	1
37814	14	2 3/4	1	3/4	3/8	1/2	1/2	1
37815	15	2 3/4	1	1	3/8	1/2	1/2	1
37816	16	2 3/4	1	1	3/8	1/2	1/2	1
37817	17	2 3/4	1 1/4	1	1/2	3/4	3/4	1 1/4
37818	18	2 3/4	1 1/4	1	1/2	3/4	3/4	1 1/4
37819	19	2 3/4	1 1/4	1	1/2	3/4	3/4	1 1/4
37820	20	3	1 1/4	1 1/4	5/8	3/4	3/4	1 1/2
37821	21	3	1 1/4	1 1/4	5/8	3/4	3/4	1 1/2
37822	22	3	1 1/4	1 1/4	5/8	3/4	3/4	1 1/2
37823	23	3	1 1/4	1 1/4	5/8	3/4	3/4	1 1/2

37916 11 Piece 1/2" Drive Universal 6 Point Impact Socket Set on Clip Rail

Contents Include:

Product Code	Size (MM)	Product Code	Size (MM)	Product Code	Size (MM)
37813	13	37817	17	37821	21
37814	14	37818	18	37822	22
37815	15	37819	19	37823	23
37816	16	37820	20		

Features

- SUPERTORQUE® lobular openings for greater turning power without deforming the fastener
- Designed for maximum engagement on 6 point fasteners
- Suitable for use with pneumatic and electric impact wrenches
- Specially heat treated for impact use to provide long life, safety, and durability
- Drive end features pin retention hole and groove

WILLIAMS®

1/2" DRIVE DEEP IMPACT SOCKETS, 6 POINT, METRIC

Black Industrial Finish

Product Code	Size (MM)	A OAL (Inches)	B Drive End Diameter (Inches)	C Working End Diameter (Inches)	D Broach Depth (Inches)	E Bolt Clearance Depth (Inches)	Bolt Clearance Diameter (Inches)	F Nose Length (Inches)
14M-610	10	3 1/4	29/32	19/32	9/32	2 9/16	11/32	2 15/32
14M-611	11	3 1/4	29/32	23/32	21/64	2 9/16	13/32	2 15/32
14M-612	12	3 1/4	29/32	49/64	23/64	2 9/16	7/16	2 15/32
14M-613	13	3 1/4	29/32	53/64	25/64	2 9/16	15/32	2 15/32
14M-614	14	3 1/4	29/32	7/8	13/32	2 9/16	15/32	2 15/32
14M-615	15	3 1/4	15/16	15/16	13/32	2 7/64	33/64	-
14M-616	16	3 1/4	31/32	31/32	29/64	1 31/32	17/32	-
14M-617	17	3 1/4	1	1	27/64	1 31/32	39/64	-
14M-618	18	3 1/4	1 1/16	1 1/16	1/2	1 31/32	21/32	-
14M-619	19	3 1/4	1 1/4	1 1/4	35/64	1 61/64	11/16	-
14M-620	20	3 1/4	1 3/16	1 3/16	35/64	1 61/64	23/32	-
14M-621	21	3 1/4	1 1/4	1 1/4	35/64	1 61/64	3/4	-
14M-622	22	3 1/2	1 5/16	1 5/16	35/64	2 7/64	51/64	-
14M-623	23	3 1/2	1 11/32	1 11/32	5/8	2 7/64	53/64	-
14M-624	24	3 1/2	1 3/8	1 3/8	5/8	2 7/64	7/8	-
14M-625	25	3 1/2	1 7/16	1 7/16	5/8	2 7/64	29/32	-
14M-626	26	3 1/2	1 31/64	1 31/64	5/8	2 7/64	15/16	-
14M-627	27	3 1/2	1 9/16	1 9/16	25/32	2 7/64	31/32	-
14M-629	29	3 1/2	1 5/8	1 5/8	13/16	2 7/64	1 1/16	-
14M-630	30	3 1/2	1 11/16	1 11/16	53/64	2 21/32	1 3/32	-
14M-632	32	3 1/2	1 13/16	1 13/16	7/8	2 21/32	1 1/4	-
14M-634	34	3 1/2	1 3/4	1 15/16	57/64	2 55/64	1 21/64	-
14M-635	35	3 1/2	1 3/4	2	57/64	2 55/64	1 23/64	-
14M-636	36	3 1/2	1 3/4	2	57/64	2 13/16	1 1/8	-

14M-610, 14M-621

MS-14-10HRC 10 Piece 1/2" Drive Deep 6 Point Impact Socket Set on Clip Rail
Contents Include:

Product Code	Size (MM)	Product Code	Size (MM)	Product Code	Size (MM)
14M-610	10	14M-614	14	14M-618	18
14M-611	11	14M-615	15	14M-619	19
14M-612	12	14M-616	16		
14M-613	13	14M-617	17		

MS-14-10HRC

MS-14-16RC 16 Piece 1/2" Drive Deep 6 Point Impact Socket Set on Clip Rail
Contents Include:

Product Code	Size (MM)	Product Code	Size (MM)	Product Code	Size (MM)	Product Code	Size (MM)
14M-610	10	14M-614	14	14M-618	18	14M-622	22
14M-611	11	14M-615	15	14M-619	19	14M-623	23
14M-612	12	14M-616	16	14M-620	20	14M-624	24
14M-613	13	14M-617	17	14M-621	21	14M-627	27

MS-14-16RC

MS-14-24RC 24 Piece 1/2" Drive Deep 6 Point Impact Socket Set on Clip Rail
Contents Include:

Product Code	Size (MM)	Product Code	Size (MM)	Product Code	Size (MM)	Product Code	Size (MM)
14M-610	10	14M-616	16	14M-622	22	14M-629	29
14M-611	11	14M-617	17	14M-623	23	14M-630	30
14M-612	12	14M-618	18	14M-624	24	14M-632	32
14M-613	13	14M-619	19	14M-625	25	14M-634	34
14M-614	14	14M-620	20	14M-626	26	14M-635	35
14M-615	15	14M-621	21	14M-627	27	14M-636	36

Features

Made in U.S.A.

- SUPERTORQUE® lobular openings for greater turning power without deforming the fastener.
- Designed for maximum engagement on 6 point fasteners.
- Suitable for use with pneumatic and electric impact wrenches.
- Specially heat treated for impact use to provide long life, safety, and durability.

MS-14-24RC

37721 37710

37913

37914

WILLIAMS®

1/2" DRIVE DEEP IMPACT SOCKETS, 6 POINT, METRIC

Black Industrial Finish

Product Code	Size (MM)	A OAL (Inches)	B Drive End Diameter (Inches)	C Working End Diameter (Inches)	D Broach Depth (Inches)	E Bolt Clearance Depth (Inches)	Bolt Clearance Diameter (Inches)	F Nose Length (Inches)
37710	10	3 1/4	29/32	19/32	9/32	2 9/16	11/32	2 15/32
37711	11	3 1/4	29/32	23/32	21/64	2 9/16	13/32	2 15/32
37712	12	3 1/4	29/32	49/64	23/64	2 9/16	7/16	2 15/32
37713	13	3 1/4	29/32	53/64	25/64	2 9/16	15/32	2 15/32
37714	14	3 1/4	29/32	7/8	13/32	2 9/16	15/32	2 15/32
37715	15	3 1/4	15/16	15/16	13/32	2 7/64	33/64	-
37716	16	3 1/4	31/32	31/32	29/64	1 31/32	17/32	-
37717	17	3 1/4	1	1	27/64	1 31/32	39/64	-
37718	18	3 1/4	1 1/16	1 1/16	1/2	1 31/32	21/32	-
37719	19	3 1/4	1 1/4	1 1/4	35/64	1 61/64	11/16	-
37721	21	3 1/4	1 1/4	1 1/4	35/64	1 61/64	3/4	-
37722	22	3 1/2	1 5/16	1 5/16	35/64	2 7/64	51/64	-
37724	24	3 1/2	1 3/8	1 3/8	5/8	2 7/64	7/8	-
37727	27	3 1/2	1 9/16	1 9/16	25/32	2 7/64	31/32	-

37913 10 Piece 1/2" Drive Deep 6 Point Impact Socket Set on Clip Rail
Contents Include:

Product Code	Size (MM)	Product Code	Size (MM)	Product Code	Size (MM)
37710	10	37714	14	37718	18
37711	11	37715	15	37719	19
37712	12	37716	16		
37713	13	37717	17		

37914 14 Piece 1/2" Drive Deep 6 Point Impact Socket Set on Clip Rail
Contents Include:

Product Code	Size (MM)	Product Code	Size (MM)	Product Code	Size (MM)	Product Code	Size (MM)
37710	10	37714	14	37718	18	37724	24
37711	11	37715	15	37719	19	37727	27
37712	12	37716	16	37721	21		
37713	13	37717	17	37722	22		

Features
- SUPERTORQUE® lobular openings for greater turning power without deforming the fastener.
- Designed for maximum engagement on 6 point fasteners.
- Suitable for use with pneumatic and electric impact wrenches.
- Specially heat treated for impact use to provide long life, safety, and durability.

WILLIAMS®

1/2" DRIVE ONE PIECE IMPACT HEX BIT DRIVERS, SAE

Black Industrial Finish

Product Code	Size (Inches)	OAL (Inches)	Product Code	Size (Inches)	OAL (Inches)
35730	1/4	1 1/2	35738	1/2	1 1/2
35732	5/16	1 1/2	35740	9/16	1 1/2
35734	3/8	1 1/2	35742	5/8	1 1/2
35736	7/16	1 1/2			

Fed. Spec: ANSI B107.2

35734

37920 7 Piece 1/2" Drive One Piece Impact Hex Bit Drivers, SAE

Contents Include:

Product Code	Size (Inches)	Product Code	Size (Inches)	Product Code	Size (Inches)
35730	1/4	35736	7/16	35742	5/8
35732	5/16	35738	1/2		
35734	3/8	35740	9/16		

37920

WILLIAMS®

1/2" DRIVE ONE PIECE IMPACT HEX BIT DRIVERS, MM

Black Industrial Finish

Product Code	Size (Inches)	OAL (Inches)	Product Code	Size (Inches)	OAL (Inches)
35706	6	1 1/2	35712	12	1 1/2
35708	8	1 1/2	35714	14	1 1/2
35710	10	1 1/2	35717	17	

Fed. Spec: ANSI B107.2

35710

37922 6 Piece 1/2" Drive One Piece Impact Hex Bit Drivers, MM

Contents Include:

Product Code	Size (MM)	Product Code	Size (MM)	Product Code	Size (MM)
35706	6	35710	10	35714	14
35708	8	35712	12	35717	17

37922

WILLIAMS®

43 PIECE 3/4" DRIVE SOCKET AND DRIVE TOOL SET

12 Point SAE, with Metal Box

Product Code	Description
WSH-43TB	43 Piece Tool Set with TB-12 Metal Tool Box
WSH-43	43 Piece Tool Set Only

Contents Include:

Drive Tools:

Product Code	Description
H-20A	19" Sliding T-Handle
H-41AA	22" Flex Handle
H-51B	20" Ratchet
H-104	3" Extension
H-110	8" Extension
H-115	16" Extension
H-140A	Universal Joint

Deep 12-Point Sockets

Product Code	Size (Inches)
HD-628	7/8
HD-630	15/16
HD-632	1
HD-634	1 1/16
HD-636	1 1/8
HD-640	1 1/4
HD-642	1 5/16
HD-644	1 3/8
HD-646	1 7/16
HD-648	1 1/2
HD-652	1 5/8

Shallow 12-Point Sockets

Product Code	Size (Inches)	Product Code	Size (Inches)
H-1224	3/4	H-1250	1 9/16
H-1226	13/16	H-1252	1 5/8
H-1228	7/8	H-1254	1 11/16
H-1230	15/16	H-1256	1 3/4
H-1232	1	H-1258	1 13/16
H-1234	1 1/16	H-1260	1 7/8
H-1236	1 1/8	H-1264	2
H-1238	1 3/16	H-1266	2 1/16
H-1240	1 1/4	H-1268	2 1/8
H-1242	1 5/16	H-1270	2 3/16
H-1244	1 3/8	H-1272	2 1/4
H-1246	1 7/16	H-1276	2 3/8
H-1248	1 1/2		

Features

Made in U.S.A.

- All tools are professional quality, made of high-grade chrome vanadium steel.
- Sockets feature SUPERTORQUE® lobular openings for greater turning power without deforming the fastener.
- Metal tool box made for years of rugged use.

WSH-43TB

WSH-29TB

WILLIAMS

29 PIECE 3/4" DRIVE SOCKET AND DRIVE TOOL SET

12 Point SAE, with Metal Box

Product Code	Description
WSH-29TB	29 Piece Tool Set with TB-6124A Metal Tool Box
WSH-29	29 Piece Tool Set Only

Contents Include:

Drive Tools:

Product Code	Description
H-20A	19" Sliding T-Handle
H-41AA	22" Flex Handle
H-51B	20" Ratchet
H-104	3" Extension
H-110	8" Extension
H-115	16" Extension
H-140A	Universal Joint

Shallow 12-Point Sockets

Product Code	Size (Inches)
H-1228	7/8
H-1230	15/16
H-1232	1
H-1234	1 1/16
H-1236	1 1/8
H-1238	1 3/16
H-1240	1 1/4

Shallow 12-Point Sockets

Product Code	Size (Inches)
H-1242	1 5/16
H-1244	1 3/8
H-1246	1 7/16
H-1248	1 1/2
H-1250	1 9/16
H-1252	1 5/8
H-1254	1 11/16
H-1256	1 3/4
H-1258	1 13/16
H-1260	1 7/8
H-1264	2
H-1268	2 1/8
H-1270	2 3/16
H-1272	2 1/4
H-1276	2 3/8

Made in U.S.A.

Features

- All tools are professional quality, made of high-grade chrome vanadium steel.
- Sockets feature SUPERTORQUE® lobular openings for greater turning power without deforming the fastener.
- Metal tool box made for years of rugged use.

WSH-22TB

WILLIAMS

22 PIECE 3/4" DRIVE SOCKET AND DRIVE TOOL SET

12 Point SAE, with Metal Box

Product Code	Description
WSH-22TB	22 Piece Tool Set with TB-49 Metal Tool Box
WSH-22	22 Piece Tool Set Only

Contents Include:

Drive Tools:

Product Code	Description
H-41AA	22" Flex Handle
H-51B	20" Ratchet
H-104	3" Extension
H-110	8" Extension
H-115	16" Extension
H-140A	Universal Joint

Shallow 12-Point Sockets

Product Code	Size (Inches)
H-1228	7/8
H-1230	15/16
H-1232	1
H-1234	1 1/16

Shallow 12-Point Sockets

Product Code	Size (Inches)
H-1236	1 1/8
H-1240	1 1/4
H-1242	1 5/16
H-1244	1 3/8
H-1246	1 7/16
H-1248	1 1/2
H-1252	1 5/8
H-1254	1 11/16
H-1256	1 3/4
H-1258	1 13/16
H-1260	1 7/8
H-1264	2

Made in U.S.A.

Features

- All tools are professional quality, made of high-grade chrome vanadium steel.
- Sockets feature SUPERTORQUE® lobular openings for greater turning power without deforming the fastener.
- Metal tool box made for years of rugged use.

WILLIAMS

13 PIECE 3/4" DRIVE SOCKET AND DRIVE TOOL SET

12 Point SAE, with Metal Box

Product Code	Description
WSH-13TB	13 Piece Tool Set with TB-49 Metal Tool Box
WSH-13	13 Piece Tool Set Only

Contents Include:

Drive Tools:

Product Code	Description
H-51B	20" Ratchet
H-110	8" Extension

Shallow 12-Point Sockets

Product Code	Size (Inches)
H-1228	7/8
H-1230	15/16
H-1232	1

Shallow 12-Point Sockets

Product Code	Size (Inches)
H-1234	1 1/16
H-1236	1 1/8
H-1240	1 1/4
H-1242	1 5/16
H-1244	1 3/8
H-1246	1 7/16
H-1248	1 1/2
H-1252	1 5/8

Made in U.S.A.

Features

- All tools are professional quality, made of high-grade chrome vanadium steel.
- Sockets feature SUPERTORQUE® lobular openings for greater turning power without deforming the fastener.
- Metal tool box made for years of rugged use.

WSH-13TB

WILLIAMS

20 PIECE 3/4" DRIVE SOCKET AND DRIVE TOOL SET

12 Point Metric, with Metal Box

Product Code	Description
MSH-20TB	20 Piece Tool Set with TB-49 Metal Tool Box
MSH-20	20 Piece Tool Set Only

Contents Include:

Drive Tools:

Product Code	Description
H-41AA	22" Flex Handle
H-51B	20" Ratchet
H-110	8" Extension
H-115	16" Extension
H-140A	Universal Joint

Shallow 12-Point Sockets

Product Code	Size (MM)
HM-1219	19
HM-1222	22
HM-1224	24
HM-1227	27

Shallow 12-Point Sockets

Product Code	Size (MM)
HM-1230	30
HM-1232	32
HM-1235	35
HM-1236	36
HM-1238	38
HM-1241	41
HM-1246	46
HM-1250	50
HM-1254	54
HM-1255	55
HM-1260	60

Made in U.S.A.

Features

- All tools are professional quality, made of high-grade chrome vanadium steel.
- Sockets feature SUPERTORQUE® lobular openings for greater turning power without deforming the fastener.
- Metal tool box made for years of rugged use.

MSH-20TB

Socket-Lok® button positively locks the socket and drive tool together, providing positive retention and quick disassembly.

WILLIAMS®

20 PIECE 3/4" DRIVE SOCKET-LOK® TOOL SET

12 Point SAE, with Metal Box

Product Code	Description
33901	20 Piece Tool Set with 50081 Metal Tool Box
50081	Replacement Case Only for Set 33901

Contents Include:

3/4" Drive Tools:

Product Code	Description
33001	20" Socket-Lok® Ratchet
33006	18" Sliding T-Handle
33002	4" Extension
33003	8" Extension

3/4" Drive Shallow 12-Point Sockets

Product Code	Size (Inches)
33228	7/8
33230	15/16
33232	1
33234	1 1/16
33236	1 1/8
33238	1 3/16
33240	1 1/4
33242	1 5/16
33244	1 3/8
33246	1 7/16
33248	1 1/2
33252	1 5/8
33256	1 3/4
33258	1 13/16
33260	1 7/8
33264	2

Features

- Unique Socket-Lok® Safety Retention System features a spring-loaded locking button for maximum socket retention and quick disassembly when used with our Williams® locking-button square drive tools and sockets. May also be used with all standard 3/4" drive tools.
- Chamfered ends provide easy engagement of the drive tool and fastener.
- All tools are professional quality, made of high-grade chrome vanadium steel.
- Sockets feature SUPERTORQUE® lobular openings for greater turning power without deforming the fastener.
- Metal tool box made for years of rugged use.

WILLIAMS 12 F

20 PIECE 3/4" SOCKET SET

12 Point Rugged-Case-System Tool Set, SAE

Product Code	Description
33903	20 Piece 3/4" Socket Set

Contents Include:

3/4" Drive Tools:

Product Code	Description
33003	8" Extension
33004	16" Extension
33012	32 Tooth Ratchet Head
33013	Universal Extendable Handle
33014	Sliding T-Handle

3/4" Drive Shallow 12 Point Sockets

Product Code	Size (Inches)
33228	7/8
33230	15/16
33232	1
33234	1 1/16
33236	1 1/8
33240	1 1/4
33242	1 5/16
33244	1 3/8
33246	1 7/16
33248	1 1/2
33252	1 5/8
33256	1 3/4
33258	1 13/16
33260	1 7/8
33264	2

Features

- Extended Handle extends from 23-1/2" to 36"
- Sockets feature SUPERTORQUE® lobular openings for greater turning power without deforming the fastener
- Packed in rugged high-density polyethylene (HDPE) cases that are strong and durable yet light in weight
- Case is shock proof at both high and low temperatures, equipped with heavy-duty metal latches and hinges
- Two-component handles are easy to grip and comfortable to carry

33903

WILLIAMS 12 F

25 PIECE 3/4" SOCKET SET

12 Point with Metal Box, SAE

Product Code	Description
33905	25 Piece 3/4" Socket Set

Contents Include:

3/4" Drive Tools:

Product Code	Description
33001	2 Piece Ratchet
33002	4" Extension
33003	8" Extension
33004	16" Extension

3/4" Drive Shallow 12 Point Sockets

Product Code	Size (Inches)
33228	7/8
33230	15/16
33232	1
33234	1 1/16
33236	1 1/8
33238	1 3/16
33240	1 1/4
33242	15/16
33244	1 3/8
33246	1 7/16
33248	1 1/2
33250	1 9/16
33252	1 5/8
33256	1 3/4
33258	1 13/16
33260	1 7/8
33264	2
33268	2 1/8
33272	2 1/4

Features

- All tools are professional quality, made of high-grade chrome vanadium steel
- Sockets feature SUPERTORQUE® lobular openings for greater turning power without deforming the fastener
- Packed in rugged high-density polyethylene (HDPE) cases that are strong and durable yet light in weight
- Case is shock proof at both high and low temperatures, equipped with heavy-duty metal latches and hinges
- Two-component handles are easy to grip and comfortable to carry

33905

H-51B

HB-51B

WILLIAMS

3/4" DRIVE INTEGRATED HANDLE RATCHETS

Chrome and Black Industrial Finish

Product Code	Description	Length (Inches)	Number of Teeth
H-51B	Chrome Ratchet	20 1/8	24
HB-51B	Black Finish Ratchet	20 1/8	24
H-52EHRK	Repair Kit for H-51B and HB-51B		

Fed. Spec: ANSI B107.10M

Made in U.S.A.

Features

- Forged one-piece ratchet provide strength and safety for industrial applications.
- Smooth comfort-grip handle permits all-day use without gloves.
- 24 tooth gear with 15 degree of engagement allows engagement in tight working areas.
- Chrome finish with mirror-like exterior can be easily cleaned after each use.
- Single Pawl ratchet design:
  1) Designed for tighter tolerances between pawl and gear which reduces metal fatigue and slippage under load.
  2) Does not require as many working parts, reducing possible breakage and parts to repair.
- Easy access reverse lever allows user to change working direction quickly and easily with only one hand.
- Ball and Spring socket retention.

H-51AB1

H-51AB

H-A1

WILLIAMS

3/4" DRIVE REMOVABLE-HANDLE RATCHETS

Knurled Handle, Chrome Finish

Product Code	Description	Length (Inches)	Number of Teeth
Complete Ratchet			
H-51AB1	Ratchet with 19 1/4" Handle	24 11/16	32
Components			
H-51AB	Ratchet Head Only	6	32
H-A1	Handle Only	19 1/4	
H-52EHRKA	Repair Kit for H-51AB1 and H-51AB		

Note: Head Bore and Handle End Diameter: 13/16"

Fed. Spec: ANSI B107.10M

Made in U.S.A.

Features

- 32 teeth action provides an 11° ratcheting angle.
- Shift lever reverses action instantly.
- Ball and spring provide firm socket retention.
- Removable handle makes the tool more versatile, and storage easier.
- Knurled handle provides a non-slip grip.
- Chrome finish models provides increased protection from rust and corrosion.
- Our most rugged, high torque capacity ratchet.

H-41AA

H-20A

HB-20A

WILLIAMS

3/4" DRIVE HANDLES

Chrome and Black Industrial Finish

Product Code	Description	Length (Inches)	Finish
H-41AA	Flex Handle Breaker Bar, Knurled Grip	22 1/8	Chrome
H-20A	Sliding T-Handle	19 1/4	Chrome
HB-20A	Sliding T-Handle	19 1/4	Black Industrial

Fed. Spec: ANSI B107.10M

Made in U.S.A.

Features

- Chrome plating provides increased protection from rust and corrosion.
- Drive handles provide extra leverage with greater strength than ratchets.
- Square drive slides on T-Handles for versatility.
- Flex handle flex drive swivels 110° in either direction.

WILLIAMS®

3/4" DRIVE EXTENSIONS

Chrome and Black Industrial Finish

Product Code	Length (Inches)
Chrome Finish	
H-104	3
H-110	8
H-115	16
Black Industrial Finish	
H-104B	3
H-110B	8
H-115B	16

Fed. Spec: ANSI B107.10M

Made in U.S.A.

Features

- Chrome plating provides increased protection from rust and corrosion.
- Ball and spring socket retention.

H-104

H-110

H-115

H-110B

H-104B

H-115B

WILLIAMS®

3/4" DRIVE ADAPTERS

Chrome and Black Industrial Finish

Product Code	Length (Inches)	Male End (Inches)	Female End (Inches)	Female End Detent
Chrome Finish				
HNX-130	3	1	3/4	Detent on Each Wall
HNX-131	3 1/16	3/4	1	Drilled Hole
Black Industrial Finish				
HNX-130B	3	1	3/4	Detent on Each Wall
HNX-131B	3 1/16	3/4	1	Drilled Hole

Fed. Spec: ANSI B107.10M

Made in U.S.A.

Features

- Chrome plating provides increased protection from rust and corrosion.
- Ball and spring socket retention.

HNX-130

HNX-131

HNX-130B

HNX-131B

WILLIAMS®

3/4" DRIVE UNIVERSAL JOINTS

Chrome and Black Industrial Finish

Product Code	Description	Length (Inches)
Chrome Finish		
H-140A	Universal Joint	4 1/16
Black Industrial Finish		
HB-104A	Universal Joint	4 1/16

Made in U.S.A.

Features

- Chrome plating provides increased protection from rust and corrosion.
- Ball and spring socket retention.

H-140A

HB-140A

33013

33012

33014

33001

33005

33006

Socket-Lok® button positively locks the socket and drive tool together, providing positive retention and quick disassembly.

33002

33003

33004

33007

33008

33009

33011

WILLIAMS®

3/4" DRIVE EXTENDABLE RATCHET AND T-HEAD

High-Polished Chrome Finish

Product Code	Description	Length (Inches)
33012	32 Tooth Ratchet Head	6
33013	Universal Extendable Handle	23 ½" to 36"
33014	Sliding T-Head	

Fed. Spec: ANSI B107.10M

Features

- Williams 3/4" Drive Ratchet and Drive Tools Feature:
  - Unique Socket-Lok® Safety Retention System features a spring-loaded locking button for maximum socket retention and quick disassembly when used with our Williams® locking-button square drive tools and sockets. May also be used with all standard 3/4" drive tools.
  - Two-piece ratchet design for maximum versatility.
  - Knurled handle to provide a firm, non-slip grip and extra turning power.
  - Narrow pear-shaped head for access into confined work areas.
  - High-polished chrome finish for easy cleaning.
- Chamfered ends provide easy engagement of the drive tool and fastener.
- Extended Handle extends from 23-1/2" to 36"

WILLIAMS®

3/4" DRIVE RATCHETS AND HANDLES

High-Polished Chrome Finish

Product Code	Description	Length (Inches)
33001	Socket-Lok® Ratchet - 32 Teeth	20
33005	Flex Handle	19
33006	Sliding T-Handle	18

Fed. Spec: ANSI B107.10M

Features

- Williams 3/4" Drive Ratchet and Drive Tools Feature:
  - Unique Socket-Lok® Safety Retention System features a spring-loaded locking button for maximum socket retention and quick disassembly when used with our Williams® locking-button square drive tools and sockets. May also be used with all standard 3/4" drive tools.
  - Two-piece ratchet design for maximum versatility.
  - Knurled handle to provide a firm, non-slip grip and extra turning power.
  - Narrow pear-shaped head for access into confined work areas.
  - High-polished chrome finish for easy cleaning.
- Chamfered ends provide easy engagement of the drive tool and fastener.

WILLIAMS®

3/4" DRIVE EXTENSIONS AND ACCESSORIES

High-Polished Chrome Finish

Product Code	Description	Length (Inches)
33002	Extension	4
33003	Extension	8
33004	Extension	16
33007	Universal Joint	4 5/16
33008	¾"F x ½"M Adapter	2 ⅛
33009	¾"F x 1"M Adapter	2 7/16
33011	1"F x ¾"M Adapter	2 ⅝

Fed. Spec: ANSI B107.10M

Features

- Williams 3/4" Drive Ratchet and Drive Tools Feature:
  - Unique Socket-Lok® Safety Retention System features a spring-loaded locking button for maximum socket retention and quick disassembly when used with our Williams® locking-button square drive tools and sockets. May also be used with all standard 3/4" drive tools.
  - High-polished chrome finish for easy cleaning.
- Chamfered ends provide easy engagement of the drive tool and fastener.

WILLIAMS®

3/4" DRIVE SHALLOW 12 POINT SOCKETS, SAE

High-Polished Chrome Finish

Product Code	Size (Inches)	A OAL (Inches)	B Drive End Diameter (Inches)	C Working End Diameter (Inches)	D Broach Depth (Inches)	E Bolt Clearance Depth (Inches)	Bolt Clearance Diameter (Inches)	F Nose Length (Inches)
H-1224	3/4	2	1 7/16	1 1/8	17/32	1 1/4	11/16	13/16
H-1226	13/16	2	1 7/16	1 7/32	9/16	1 1/4	11/16	13/16
H-1228	7/8	2	1 7/16	1 5/16	19/32	1 1/4	11/16	13/16
H-1230	15/16	2	1 7/16	1 3/8	21/32	1 1/4	11/16	13/16
H-1231	31/32	2	1 7/16	1 13/32	11/16	1 1/4	11/16	13/16
H-1232	1	2 1/16	1 7/16	1 15/32	11/16	1 5/16	11/16	25/32
H-1234	1 1/16	2 1/8	1 1/2	1 9/16	3/4	1 5/32	1 1/32	7/8
H-1236	1 1/8	2 3/16	1 1/2	1 5/8	13/16	1 7/32	1 1/8	29/32
H-1238	1 3/16	2 1/4	1 1/2	1 11/16	27/32	1 9/32	1 5/32	31/32
H-1240	1 1/4	2 1/4	1 1/2	1 3/4	27/32	1 11/32	1 9/32	15/16
H-1242	1 5/16	2 5/16	1 5/8	1 7/8	27/32	1 13/32	1 11/32	1
H-1244	1 3/8	2 5/16	1 5/8	1 15/16	7/8	1 3/8	1 7/16	1
H-1246	1 7/16	2 3/8	1 5/8	2	15/16	1 7/16	1 1/4	1
H-1248	1 1/2	2 1/2	1 5/8	2 1/8	1	1 9/16	1 1/4	1 1/8
H-1250	1 9/16	2 5/8	1 3/4	2 3/16	1 5/32	1 11/16	1 3/8	1 1/4
H-1252	1 5/8	2 5/8	1 3/4	2 1/4	1 5/32	1 11/16	1 3/8	1 1/4
H-1254	1 11/16	2 3/4	1 25/32	2 3/8	1 3/16	1 13/16	1 3/8	1 3/8
H-1256	1 3/4	2 3/4	1 3/4	2 7/16	1 3/16	1 13/16	1 3/8	1 3/8
H-1258	1 13/16	2 7/8	1 3/4	2 1/2	1 1/4	1 31/32	1 5/16	1 7/16
H-1260	1 7/8	3	1 3/4	2 9/16	1 5/16	2 1/16	1 5/16	1 9/16
H-1264	2	3 1/8	1 3/4	2 3/4	1 5/16	2 3/16	1 5/16	1 11/16
H-1266	2 1/16	3 1/8	1 3/4	2 3/4	1 3/8	2 3/16	1 5/16	1 11/16
H-1268	2 1/8	3 1/4	1 3/4	2 15/16	1 7/16	2 5/16	1 5/16	1 13/16
H-1270	2 3/16	3 1/4	1 3/4	2 15/16	1 1/2	2 5/16	1 5/16	1 13/16
H-1272	2 1/4	3 3/8	1 3/4	3 1/8	1 1/2	2 7/16	1 1/4	1 7/8
H-1274	2 5/16	3 1/2	1 3/4	3 1/4	1 5/8	2 9/16	1 1/4	2
H-1276	2 3/8	3 5/8	1 3/4	3 1/4	1 3/4	2 11/16	1 1/4	2 1/8

Fed. Spec: ANSI B107.1

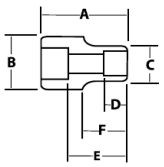

WSH-16TB 16 Piece 3/4" Drive Shallow 12-Point Socket Set with TB-49 Tool Box

WSH-16RC 16 Piece 3/4" Drive Shallow 12-Point Socket Set on Clip Rails

Contents Include:

Product Code	Size (Inches)	Product Code	Size (Inches)	Product Code	Size (Inches)	Product Code	Size (Inches)
H-1228	7/8	H-1236	1 1/8	H-1246	1 7/16	H-1256	1 3/4
H-1230	15/16	H-1240	1 1/4	H-1248	1 1/2	H-1258	1 13/16
H-1232	1	H-1242	1 5/16	H-1252	1 5/8	H-1260	1 7/8
H-1234	1 1/16	H-1244	1 3/8	H-1254	1 11/16	H-1264	2

WSH-16TB

WSH-26RC 26 Piece 3/4" Drive Shallow 12-Point Socket Set on Clip Rails

Contents Include:

Product Code	Size (Inches)	Product Code	Size (Inches)	Product Code	Size (Inches)	Product Code	Size (Inches)
H-1224	3/4	H-1238	1 3/16	H-1252	1 5/8	H-1268	2 1/8
H-1226	13/16	H-1240	1 1/4	H-1254	1 11/16	H-1270	2 3/16
H-1228	7/8	H-1242	1 5/16	H-1256	1 3/4	H-1272	2 1/4
H-1230	15/16	H-1244	1 3/8	H-1258	1 13/16	H-1274	2 5/16
H-1232	1	H-1246	1 7/16	H-1260	1 7/8	H-1276	2 3/8
H-1234	1 1/16	H-1248	1 1/2	H-1264	2		
H-1236	1 1/8	H-1250	1 9/16	H-1266	2 1/16		

WSH-26RC

Features

- SUPERTORQUE® lobular openings for greater turning power without deforming the fastener.
- Designed for quick engagement on both 6 and 12 point fasteners.

Made in U.S.A.

33244 33228

33920

33922

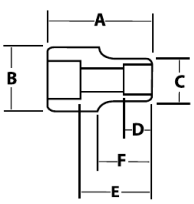

WILLIAMS®

12 F

3/4" DRIVE SHALLOW 12 POINT SOCKETS, SAE

High-Polished Chrome Finish

Product Code	Size (Inches)	A OAL (Inches)	B Drive End Diameter (Inches)	C Working End Diameter (Inches)	F Nose Length (Inches)
33228	7/8	1 15/16	1 7/16	1 1/4	35/64
33230	15/16	2	1 7/16	1 3/8	5/8
33232	1	2 1/16	1 7/16	1 7/16	5/8
33234	1 1/16	2 1/16	1 7/16	1 1/2	7/8
33236	1 1/8	2 1/16	1 1/2	1 9/16	7/8
33238	1 3/16	2 1/8	1 1/2	1 11/16	15/16
33240	1 1/4	2 3/16	1 1/2	1 3/4	15/16
33242	1 5/16	2 3/16	1 1/2	1 13/16	1
33244	1 3/8	2 1/4	1 5/8	1 7/8	1
33246	1 7/16	2 1/4	1 5/8	1 31/32	1 7/64
33248	1 1/2	2 3/8	1 3/4	2 1/16	1 7/64
33252	1 5/8	2 1/2	1 3/4	2 3/16	1 3/16
33256	1 3/4	2 9/16	1 13/16	2 5/16	1 1/4
33258	1 13/16	2 11/16	1 13/16	2 3/8	1 1/4
33260	1 7/8	2 3/4	1 7/8	2 1/2	1 11/32
33264	2	2 13/16	1 7/8	2 11/16	1 13/32

Fed. Spec: ANSI B107.1

33920 11 Piece 3/4" Drive Shallow 12-Point Socket Set on Clip Rails

Contents Include:

Product Code	Size (Inches)	Product Code	Size (Inches)	Product Code	Size (Inches)
33228	7/8	33236	1 1/8	33244	1 3/8
33230	15/16	33238	1 3/16	33246	1 7/16
33232	1	33240	1 1/4	33248	1 1/2
33234	1 1/16	33242	1 5/16		

33922 16 Piece 3/4" Drive Shallow 12-Point Socket Set on Clip Rails

Contents Include:

Product Code	Size (Inches)	Product Code	Size (Inches)	Product Code	Size (Inches)
33228	7/8	33242	1 5/16	33260	1 7/8
33230	15/16	33244	1 3/8	33264	2
33232	1	33246	1 7/16		
33234	1 1/16	33248	1 1/2		
33236	1 1/8	33252	1 5/8		
33238	1 3/16	33256	1 3/4		
33240	1 1/4	33258	1 13/16		

Features

- Williams 3/4" Drive Hand Sockets and Drive Tools Feature:
  - Unique Socket-Lok® Safety Retention System features a spring-loaded locking button for maximum socket retention and quick disassembly when used with our Williams® locking-button square drive tools and sockets. May also be used with all standard 3/4" drive tools.
  - Sockets feature a deep chamfer on the drive end to speed insertion onto the drive tool.
  - Chamfered ends provide easy engagement of the drive tool and fastener.
  - SUPERTORQUE® recessed corners in socket end provide extra turning power.
  - High-polished chrome finish tools clean easily and resist rust.
- Designed for quick engagement on both 6 and 12 point fasteners.

WILLIAMS®

3/4" DRIVE DEEP SOCKETS, 6 POINT, SAE

High-Polished Chrome Finish

Product Code	Size (Inches)	A OAL (Inches)	B Drive End Diameter (Inches)	C Working End Diameter (Inches)	D Broach Depth (Inches)	E Bolt Clearance Depth (Inches)	Bolt Clearance Diameter (Inches)	F Nose Length (Inches)
HD-628	7/8	3 1/2	1 7/16	1 5/16	5/8	2 1/2	11/16	2 5/16
HD-630	15/16	3 1/2	1 7/16	1 3/8	21/32	2 1/2	11/16	2 5/16
HD-632	1	3 1/2	1 1/2	1 7/16	23/32	2 1/2	11/16	2 5/16
HD-634	1 1/16	3 1/2	1 1/2	1 9/16	3/4	2 1/2	3/4	2 7/32
HD-636	1 1/8	3 1/2	1 1/2	1 5/8	13/16	2 1/2	25/32	2 7/32
HD-640	1 1/4	3 1/2	1 1/2	1 3/4	1	2 1/2	7/8	2 3/16
HD-642	1 5/16	3 1/2	1 5/8	1 7/8	1	2 1/2	15/16	2 3/16
HD-644	1 3/8	3 1/2	1 5/8	1 15/16	1	2 9/16	1 3/8	2 3/16
HD-646	1 7/16	3 1/2	1 5/8	2	1	2 9/16	1 7/16	2 1/8
HD-648	1 1/2	3 1/2	1 5/8	2 1/16	1 1/4	2 9/16	1 1/2	2 1/8
HD-652	1 5/8	3 1/2	1 3/4	2 1/4	1 3/8	2 9/16	1 5/8	2 1/8

Fed. Spec: ANSI B107.1

HD-628 HD-640

WSHD-11HRC 11 Piece 3/4" Drive Deep 6 Point Socket Set on Clip Rail

Contents Include:

Product Code	Size (Inches)	Product Code	Size (Inches)	Product Code	Size (Inches)
HD-628	7/8	HD-636	1 1/8	HD-646	1 7/16
HD-630	15/16	HD-640	1 1/4	HD-648	1 1/2
HD-632	1	HD-642	1 5/16	HD-652	1 5/8
HD-634	1 1/16	HD-644	1 3/8		

WSHD-11RC

Features

- SUPERTORQUE® lobular openings for greater turning power without deforming the fastener.
- Designed for maximum engagement on 6 point fasteners.

Made in U.S.A.

WILLIAMS®

3/4" DRIVE SHALLOW SOCKETS, 12 POINT, METRIC

High-Polished Chrome Finish

Product Code	Size (MM)	A OAL (Inches)	B Drive End Diameter (Inches)	C Working End Diameter (Inches)	D Broach Depth (Inches)	E Bolt Clearance Depth (Inches)	Bolt Clearance Diameter (Inches)	F Nose Length (Inches)
HM-1219	19	2	7/16	1 1/8	9/16	1 1/32	11/16	13/16
HM-1222	22	2	7/16	1 1/4	5/8	1 1/32	11/16	13/16
HM-1224	24	2	7/16	1 3/8	21/32	1 1/32	11/16	13/16
HM-1227	27	2	1 1/2	1 9/16	3/4	1 1/32	1 1/16	11/16
HM-1230	30	2 7/32	1 1/2	1 5/8	13/16	1 7/32	1 3/16	27/32
HM-1232	32	2 1/4	1 1/2	1 3/4	7/8	1 5/16	1 5/16	7/8
HM-1235	35	2 5/16	1 5/8	1 15/16	29/32	1 13/32	1 7/16	7/8
HM-1236	36	2 5/16	1 5/8	1 15/16	29/32	1 13/32	1 1/4	7/8
HM-1238	38	2 1/2	1 5/8	2 1/16	1	1 19/32	1 9/16	1 1/16
HM-1241	41	2 5/8	1 3/4	2 3/16	1 1/16	1 23/32	1 13/32	1 3/16
HM-1246	46	3 1/8	1 3/4	2 7/16	1 3/16	1 31/32	1 13/32	1 11/16
HM-1250	50	3	1 3/4	2 5/8	1 5/16	2 3/32	1 13/32	1 13/32
HM-1254	54	3 1/4	1 3/4	2 7/8	1 15/32	2 1/8	1 13/32	1 21/32
HM-1255	55	3 1/4	1 3/4	2 29/32	1 15/32	2 11/32	1 13/32	1 21/32
HM-1260	60	3 5/8	1 3/4	3 1/4	1 3/4	2 23/32	1 3/4	2 1/8

Fed. Spec: ANSI B107.5

HM1232

MSH-15TB 15 Piece 3/4" Drive Shallow 12 Point Socket Set with TB-49 Tool Box
MSH-15RC 15 Piece 3/4" Drive Shallow 12 Point Socket Set on Clip Rail

Contents Include:

Product Code	Size (MM)	Product Code	Size (MM)	Product Code	Size (MM)	Product Code	Size (MM)
HM-1219	19	HM-1230	30	HM-1238	38	HM-1254	54
HM-1222	22	HM-1232	32	HM-1241	41	HM-1255	55
HM-1224	24	HM-1235	35	HM-1246	46	HM-1260	60
HM-1227	27	HM-1236	36	HM-1250	50		

MSH-15RC

Features

- SUPERTORQUE® lobular openings for greater turning power without deforming the fastener.
- Designed for quick engagement on both 6 and 12 point fasteners.

Made in U.S.A.

WILLIAMS®

3/4" DRIVE IMPACT EXTENSIONS AND ACCESSORIES

Black Industrial Finish

Product Code	Description	Length (Inches)	Use RET RING®	Use O-Ring / Pin	Socket Retention
6-107	Impact Extension	7	6-1X	6-1A / 6-2C	Through Hole and Pin
6-110	Impact Extension	9 3/4	6-1X	6-1A / 6-2C	Through Hole and Pin
6-113	Impact Extension	12 3/4	6-1X	6-1A / 6-2C	Through Hole and Pin
6-140B	Impact Universal Joint	3 1/2	6-1X	6-1A / 6-2C	Through Hole and Pin
6-7	1"M x 3/4"F Adapter	2 3/4	6-1X	6-1A / 6-2C	Through Hole and Pin
6-4A	1/2"M x 3/4"F Adapter	2 1/2	6-1X	6-1A / 6-2C	Spring Plunger

Fed. Spec: ANSI B107.2

Features

- Specially heat treated for impact use to provide long life, safety, and durability.
- Pin and o-ring or RET RING® (sold separately) secure tools onto impact wrench for safety and convenience.
- Suitable for use with pneumatic and electric impact wrenches.
- Drive end features pin retention hole and groove.

WILLIAMS®

3/4" DRIVE IMPACT EXTENSIONS AND ACCESSORIES

Black Industrial Finish

Product Code	Description	Length (Inches)	Use RET RING®	Use O-Ring / Pin	Socket Retention
38002	Impact Extension	7	6-1X	6-1A / 6-2C	Through Hole and Pin
38003	Impact Extension	10	6-1X	6-1A / 6-2C	Through Hole and Pin
38004	Impact Extension	13	6-1X	6-1A / 6-2C	Through Hole and Pin
38001	Impact Universal Joint	4 5/16	6-1X	6-1A / 6-2C	Through Hole and Pin
38005	1/2"M x 3/4"F Adapter	2 3/16	6-1X	6-1A / 6-2C	Ball and Spring
38006	1"M x 3/4"F Adapter	2 7/16	6-1X	6-1A / 6-2C	Through Hole and Pin

Fed. Spec: ANSI B107.2

Features

- Specially heat treated for impact use to provide long life, safety, and durability.
- Pin and o-ring or RET RING® (sold separately) secure tools onto impact wrench for safety and convenience.
- Suitable for use with pneumatic and electric impact wrenches.
- Drive end features pin retention hole and groove.

WILLIAMS®

3/4" DRIVE RET RING® ONE-PIECE IMPACT RETAINING RINGS

Product Code	Inside Dia. (Inches)	Application
6-1X	1 7/16	Fits All Williams 3/4" Drive Sockets and Accessories
6-2X	1 5/8	Fits Competitive Impact Sockets
6-3X	1 1/4	Fits Competitive Impact Sockets

USA Made in U.S.A.

Features

- Quickly secures impact sockets to impact wrenches.
- Securely retains sockets and accessories to square drive of impact wrench.
- For 3/4" drive impact tools with pin retention hole and groove.
- Made of oil resistant material.
- RET RING® is a trademark of FTL Enterprises, Inc.

WILLIAMS®

3/4" DRIVE IMPACT RETAINING PINS AND RINGS

Black Industrial Finish

Product Code	Description	Diameter	Length	Application
6-1A	Impact Retaining O-Ring	1 1/4	NA	Fits All Williams 3/4" Drive Sockets and Accessories
6-2B	Impact Retaining Pin	3/16	1 1/4	Fits Williams Impact Sockets with "B" Dimension to 1 3/4"
6-2C	Impact Retaining Pin	3/16	1 1/2	Fits Williams Impact Sockets with "B" Dimension 1 3/4" and Greater

Made in U.S.A.

Features

- Specially heat treated for impact use to provide long life, safety, and durability.
- Suitable for use with pneumatic and electric impact wrenches.
- For 3/4" drive impact tools with pin retention hole and groove.

6-1A

6-2B

WILLIAMS®

3/4" DRIVE RET RING® ONE-PIECE IMPACT RETAINING RINGS WITH CRUSH GAUGE

Black Industrial Finish

Product Code	Inside Dia. (In.)
6-0XS	1 1/4"
6-1XS	1 7/16"
6-2XS	1 5/8"
6-3XS	1 3/4"
6-4XS	2
6-5XS	2 1/8"
6-6XS	2 1/4"

Made in U.S.A.

Features

- Fits all Williams 3/4" Drive Sockets and Accessories
- Crush Gage on the resin pin indicates when a socket is excessively worn and should be replaced.
- Securely retains sockets and accessories to square drive of impact wrench
- For 3/4" drive impact tools with pin retention hole and groove
- Made of oil resistant material
- RET RING® is a trademark of FTL Enterprises, Inc.

6-2XS

WILLIAMS®

3/4" DRIVE BUDD® WHEEL IMPACT SOCKET, 6 POINT, SAE

Black Industrial Finish

		A	B	C	D	E			
Product Code	Size (Inches)	OAL (Inches)	Drive End Diameter (Inches)	Working End Diameter (Inches)	Broach Depth (Inches)	Bolt Clearance Depth (Inches)	Bolt Clearance Diameter (Inches)	Uses RET RING® Number	Use O-Ring / Pin
16-648BW	13/16 Square & 1 1/2 Hex	4	1 3/4	2 1/4	1 7/16	2 1/4	1 1/4	6-1X	6-1A / 6-2C

Fed. Spec: ANSI B107.2

Made in U.S.A.

Features

- SUPERTORQUE® lobular openings for greater turning power without deforming the fastener.
- 13/16" square opening threads stud into wheel.
- 1-1/2" hex opening engages and tightens the wheel lug nut.
- Suitable for use with pneumatic and electric impact wrenches.
- Specially heat treated for impact use to provide long life, safety, and durability.

16-648BW

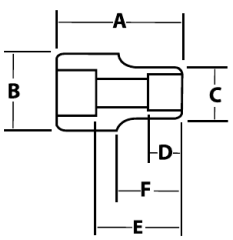

6-620A

WILLIAMS®

3/4" DRIVE SHALLOW IMPACT SOCKETS, 6 POINT, SAE

Black Industrial Finish

		A	B	C	D	E		F		
Product Code	Size (Inches)	OAL (Inches)	Drive End Diameter (Inches)	Working End Diameter (Inches)	Broach Depth (Inches)	Bolt Clearance Depth (Inches)	Bolt Clearance Diameter (Inches)	Nose Length (Inches)	Uses RET RING® Number	Use O-Ring / Pin
6-618A	9/16	2	1 5/8	1	17/32	1 1/32	1/2	1	6-1XS	6-1A / 6-2B
6-620A	5/8	2	1 5/8	1 3/32	17/32	1 1/32	1/2	1	6-1XS	6-1A / 6-2B
6-622A	11/16	2	1 5/8	1 5/32	17/32	1 1/32	1/2	1	6-1XS	6-1A / 6-2B
6-624A	3/4	2	1 5/8	1 1/4	17/32	1 1/32	11/16	1	6-1XS	6-1A / 6-2B
6-626A	13/16	2	1 5/8	1 3/8	17/32	1 1/32	11/16	1	6-1XS	6-1A / 6-2B
6-628A	7/8	2	1 5/8	1 1/2	19/32	1 1/32	11/16	1	6-1XS	6-1A / 6-2B
6-630A	15/16	2	1 5/8	1 9/16	21/32	1 1/32	11/16	1	6-1XS	6-1A / 6-2B
6-632A	1	2	1 5/8	1 5/8	11/16	1 1/32	11/16	-	6-1XS	6-1A / 6-2B
6-634A	1 1/16	2	1 5/8	1 11/16	3/4	1 1/32	1 1/16	1 5/16	6-1XS	6-1A / 6-2B
6-636	1 1/8	2 1/8	1 5/8	1 3/4	3/4	1 5/32	1 1/8	1 7/16	6-1XS	6-1A / 6-2B
6-638	1 3/16	2 1/8	1 5/8	1 7/8	3/4	1 5/32	1 3/16	1 7/16	6-1XS	6-1A / 6-2B
6-640	1 1/4	2 1/8	1 3/4	2	13/16	1 5/32	1 1/4	1 7/16	6-1XS	6-1A / 6-2C
6-642	1 5/16	2 1/8	1 3/4	2 1/32	7/8	1 5/32	1 5/16	1 7/16	6-1XS	6-1A / 6-2C
6-644	1 3/8	2 1/4	1 3/4	2 1/8	7/8	1 9/32	1 3/8	1 9/16	6-1XS	6-1A / 6-2C
6-646	1 7/16	2 1/4	1 3/4	2 3/16	7/8	1 9/32	1 7/16	1 9/16	6-1XS	6-1A / 6-2C
6-648	1 1/2	2 1/4	1 3/4	2 1/4	15/16	1 9/32	1 1/2	1 9/16	6-1XS	6-1A / 6-2C
6-650	1 9/16	2 3/8	1 3/4	2 11/32	15/16	1 13/32	1 9/16	1 11/16	6-1XS	6-1A / 6-2C
6-652	1 5/8	2 3/8	1 3/4	2 13/32	1	1 13/32	1 5/8	1 11/16	6-1XS	6-1A / 6-2C
6-654	1 11/16	2 9/16	1 3/4	2 15/32	1 1/32	1 19/32	1 7/16	1 7/8	6-1XS	6-1A / 6-2C
6-656	1 3/4	2 9/16	1 3/4	2 17/32	1 1/32	1 19/32	1 3/4	1 7/8	6-1XS	6-1A / 6-2C
6-658	1 13/16	2 5/8	1 3/4	2 19/32	1 1/8	1 21/32	1 13/16	1 15/16	6-1XS	6-1A / 6-2C
6-660	1 7/8	2 3/4	1 3/4	2 5/8	1 1/8	1 13/16	1 7/16	2 1/16	6-1XS	6-1A / 6-2C
6-662	1 15/16	2 3/4	1 3/4	2 3/4	1 1/8	1 3/4	1 7/16	2 1/16	6-1XS	6-1A / 6-2C
6-664	2	2 7/8	1 3/4	2 13/16	1 1/8	1 13/16	1 7/16	2 3/16	6-1XS	6-1A / 6-2C
6-666	2 1/16	2 7/8	1 3/4	2 7/8	1 3/16	1 13/16	1 7/16	2 3/16	6-1XS	6-1A / 6-2C
6-670	2 3/16	3 3/16	1 3/4	3 1/16	1 5/16	2 1/16	2 3/16	2 1/2	6-1XS	6-1A / 6-2C
6-672	2 1/4	3 3/16	1 3/4	3 1/8	1 3/8	2 5/32	1 27/32	2 1/2	6-1XS	6-1A / 6-2C
6-676	2 3/8	3 1/2	1 3/4	3 1/4	1 7/16	2 7/16	1 27/32	2 13/16	6-1XS	6-1A / 6-2C

Fed. Spec: ANSI B107.2

WS-6-14HA 14 Piece 3/4" Drive Shallow 6 Point Impact Socket Set on Clip Rail

Contents Include:

Product Code	Size (Inches)	Product Code	Size (Inches)	Product Code	Size (Inches)
6-624A	3/4	6-634A	1 1/16	6-644	1 3/8
6-626A	13/16	6-636	1 1/8	6-646	1 7/16
6-628A	7/8	6-638	1 3/16	6-648	1 1/2
6-630A	15/16	6-640	1 1/4	6-652	1 5/8
6-632A	1	6-642	1 5/16		

Features

Made in U.S.A.

- SUPERTORQUE® lobular openings for greater turning power without deforming the fastener.
- Designed for maximum engagement on 6 point fasteners.
- Suitable for use with pneumatic and electric impact wrenches.
- Specially heat treated for impact use to provide long life, safety, and durability.

WS-6-14HA

WILLIAMS®

3/4" DRIVE SHALLOW IMPACT SOCKETS, 6 POINT, SAE

Black Industrial Finish

Product Code	Size (Inches)	A OAL (Inches)	B Drive End Diameter (Inches)	C Working End Diameter (Inches)	F Nose Length (Inches)	Uses RET RING® Number	Use O-Ring / Pin
38118	9/16	2	1 5/8	1	1	6-1XS	6-1A / 6-2B
38120	5/8	2	1 5/8	1 3/32	1	6-1XS	6-1A / 6-2B
38122	11/16	2	1 5/8	1 5/32	1	6-1XS	6-1A / 6-2B
38124	3/4	2	1 5/8	1 1/4	1	6-1XS	6-1A / 6-2B
38126	13/16	2	1 5/8	1 5/8	1	6-1XS	6-1A / 6-2B
38128	7/8	2	1 11/16	1 7/16	2 9/16	6-1XS	6-1A / 6-2B
38130	15/16	2	1 11/16	1 1/2	2 9/16	6-1XS	6-1A / 6-2B
38132	1	2 1/16	1 11/16	1 9/16	5/8	6-1XS	6-1A / 6-2B
38134	1 1/16	2 1/16	1 11/16	1 11/16	25/32	6-1XS	6-1A / 6-2B
38136	1 1/8	2 1/16	1 3/4	1 3/4	25/32	6-1XS	6-1A / 6-2C
38138	1 3/16	2 1/16	1 3/4	1 13/16	25/32	6-1XS	6-1A / 6-2C
38140	1 1/4	2 1/4	1 3/4	1 7/8	13/16	6-1XS	6-1A / 6-2C
38142	1 5/16	2 1/4	1 3/4	1 15/16	13/16	6-1XS	6-1A / 6-2C
38144	1 3/8	2 1/4	1 3/4	2 1/16	13/16	6-1XS	6-1A / 6-2C
38146	1 7/16	2 1/4	1 3/4	2 7/64	13/16	6-1XS	6-1A / 6-2C
38148	1 1/2	2 1/4	1 3/4	2 13/64	7/8	6-1XS	6-1A / 6-2C
38150	1 9/16	2 1/4	1 3/4	2 7/32	7/8	6-1XS	6-1A / 6-2C
38152	1 5/8	2 1/4	1 3/4	2 15/64	7/8	6-1XS	6-1A / 6-2C
38154	1 11/16	2 7/16	1 3/4	2 15/32	1	6-1XS	6-1A / 6-2C
38156	1 3/4	2 7/16	1 3/4	2 1/2	1	6-1XS	6-1A / 6-2C
38158	1 13/16	2 7/16	1 3/4	2 19/32	1	6-1XS	6-1A / 6-2C
38160	1 7/8	2 11/16	1 3/4	2 11/16	1 3/16	6-1XS	6-1A / 6-2C
38162	1 15/16	2 11/16	1 3/4	2 3/4	1 3/16	6-1XS	6-1A / 6-2C
38164	2	2 11/16	1 3/4	2 13/16	1 3/16	6-1XS	6-1A / 6-2C

Fed. Spec: ANSI B107.2

38144
38130

38920 9 Piece 3/4" Drive Shallow 6 Point Impact Socket Set on Clip Rail

Contents Include:

Product Code	Size (Inches)	Product Code	Size (Inches)	Product Code	Size (Inches)
38132	1	38138	1 3/16	38144	1 3/8
38134	1 1/16	38140	1 1/4	38146	1 7/16
38136	1 1/8	38142	1 5/16	38148	1 1/2

38920

38901 16 Piece 3/4" Drive Shallow 6 Point Impact Socket Set with 50083 Metal Box

Contents Include:

Product Code	Size (Inches)	Product Code	Size (Inches)	Product Code	Size (Inches)
38128	7/8	38140	1 1/4	38156	1 3/4
38130	15/16	38142	1 5/16	38158	1 13/16
38132	1	38144	1 3/8	38160	1 7/8
38134	1 1/16	38146	1 7/16	38164	2
38136	1 1/8	38148	1 1/2		
38138	1 3/16	38152	1 5/8		

Features

- SUPERTORQUE® lobular openings for greater turning power without deforming the fastener.
- Designed for maximum engagement on 6 point fasteners.
- Suitable for use with pneumatic and electric impact wrenches.
- Specially heat treated for impact use to provide long life, safety, and durability.
- Drive end features pin retention hole and groove.

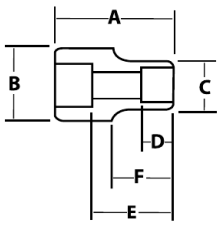

38901

WILLIAMS®

3/4" DRIVE DEEP IMPACT SOCKETS, 6 POINT, SAE

Black Industrial Finish

16-624 16-632

		A	B	C	D	E	F		
Product Code	Size (Inches)	OAL (Inches)	Drive End Diameter (Inches)	Working End Diameter (Inches)	Broach Depth (Inches)	Bolt Clearance Depth (Inches)	Bolt Clearance Diameter (Inches)	Nose Length (Inches)	Uses RET RING® Number	Use O-Ring / Pin
16-624	3/4	3	1 5/8	1 1/4	9/16	2 1/32	9/16	3/4	6-1XS	6-1A / 6-2B
16-626	13/16	3	1 5/8	1 7/16	5/8	2 1/32	9/16	3/4	6-1XS	6-1A / 6-2B
16-628	7/8	3	1 5/8	1 7/16	5/8	2 1/32	5/8	3/4	6-1XS	6-1A / 6-2B
16-630	15/16	3	1 5/8	1 5/8	5/8	2 1/32	5/8	-	6-1XS	6-1A / 6-2B
16-632	1	3	1 5/8	1 5/8	11/16	2 1/32	21/32	-	6-1XS	6-1A / 6-2B
16-634	1 1/16	3	1 5/8	1 11/16	11/16	2 1/32	3/4	2 5/16	6-1XS	6-1A / 6-2B
16-636	1 1/8	3	1 5/8	1 3/4	3/4	2 1/32	13/16	2 5/16	6-1XS	6-1A / 6-2B
16-638	1 3/16	3 3/16	1 3/4	1 15/16	3/4	2 7/32	1 3/16	2 1/2	6-1XS	6-1A / 6-2C
16-640	1 1/4	3 1/4	1 3/4	1 15/16	7/8	2 9/32	1 1/4	2 9/16	6-1XS	6-1A / 6-2C
16-642	1 5/16	3 1/4	1 3/4	2	7/8	2 9/32	1 9/32	2 9/16	6-1XS	6-1A / 6-2C
16-644	1 3/8	3 1/4	1 3/4	2 1/8	7/8	2 9/32	1 3/8	2 9/16	6-1XS	6-1A / 6-2C
16-646	1 7/16	3 1/2	1 3/4	2 1/8	7/8	2 17/32	1 13/32	2 13/16	6-1XS	6-1A / 6-2C
16-648	1 1/2	3 1/2	1 3/4	2 1/4	15/16	2 17/32	1 1/2	2 13/16	6-1XS	6-1A / 6-2C
16-650	1 9/16	3 1/2	1 3/4	2 5/16	15/16	2 17/32	1 9/16	2 13/16	6-1XS	6-1A / 6-2C
16-652	1 5/8	3 1/2	1 3/4	2 7/16	15/16	2 17/32	1 5/8	2 13/16	6-1XS	6-1A / 6-2C
16-654	1 11/16	3 1/2	1 3/4	2 1/2	1	2 17/32	1 11/16	2 13/16	6-1XS	6-1A / 6-2C
16-656	1 3/4	3 1/2	1 3/4	2 1/2	1	2 17/32	1 3/4	2 13/16	6-1XS	6-1A / 6-2C
16-658	1 13/16	3 3/4	1 3/4	2 5/8	1 1/16	2 3/4	1 13/16	2 25/32	6-1XS	6-1A / 6-2C
16-660	1 7/8	3 3/4	1 3/4	2 11/16	1 1/8	2 3/4	1 7/8	2 25/32	6-1XS	6-1A / 6-2C
16-664	2	3 3/4	1 3/4	2 3/16	1 1/8	2 3/4	2	2 25/32	6-1XS	6-1A / 6-2C

Fed. Spec: ANSI B107.2

WS-16-8H 8 Piece 3/4" Drive Deep 6 Point Impact Socket Set on Clip Rail

Contents Include:

Product Code	Size (Inches)	Product Code	Size (Inches)
16-628	7/8	16-636	1 1/8
16-630	15/16	16-640	1 1/4
16-632	1	16-642	1 5/16
16-634	1 1/16	16-648	1 1/2

Made in U.S.A.

Features

- SUPERTORQUE® lobular openings for greater turning power without deforming the fastener.
- Designed for maximum engagement on 6 point fasteners.
- Suitable for use with pneumatic and electric impact wrenches.
- Specially heat treated for impact use to provide long life, safety, and durability.

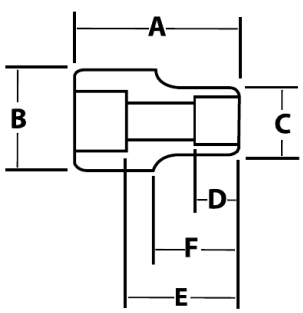

WS-16-8H

WILLIAMS®

3/4" DRIVE HEX-DRIVER IMPACT SOCKETS, SAE

Black Industrial Finish

Product Code	Hex Size (Inches)	A OAL	B Drive End Diameter	F Nose Length	Uses RET RING® Number	Use O-Ring / Pin
38216	1/2	3 1/2	1 3/4	3/4	6-1XS	6-1A / 6-2C
38218	9/16	3 1/2	1 3/4	3/4	6-1XS	6-1A / 6-2C
38220	5/8	3 1/2	1 3/4	3/4	6-1XS	6-1A / 6-2C
38224	3/4	3 1/2	1 3/4	3/4	6-1XS	6-1A / 6-2C
38226	13/16	3 1/2	1 3/4	3/4	6-1XS	6-1A / 6-2C
38228	7/8	3 1/2	1 3/4	3/4	6-1XS	6-1A / 6-2C
38232	1	3 1/2	1 3/4	3/4	6-1XS	6-1A / 6-2C
38236	1 1/8	3 1/2	1 3/4	3/4	6-1XS	6-1A / 6-2C
38240	1 1/4	3 1/2	1 3/4	3/4	6-1XS	6-1A / 6-2C

38240 38216

38932 5 Piece 3/4" Drive Hex-Driver Impact Socket Set on Clip Rail

Contents Include:

Product Code	Size (Inches)	Product Code	Size (Inches)
38220	5/8	38228	7/8
38224	3/4	38232	1
38226	13/16		

38932

38903 9 Piece 3/4" Drive Hex-Driver Impact Socket Set with 50085 Metal Box

Contents Include:

Product Code	Size (Inches)	Product Code	Size (Inches)
38216	1/2	38228	7/8
38218	9/16	38232	1
38220	5/8	38236	1 1/8
38224	3/4	38240	1 1/4
38226	13/16		

Features

- One-piece design maximizes strength and reduces breakage.
- Chamfered ends provide easy engagement of the drive tool and fastener.
- Suitable for use with pneumatic and electric impact wrenches.
- Specially heat treated for impact use to provide long life, safety, and durability.
- Drive end features pin retention hole and groove.

38903

6M-617A

MS-6-8H

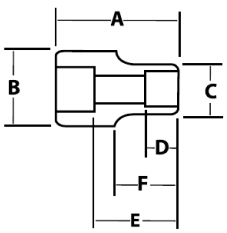

WILLIAMS®

3/4" DRIVE SHALLOW IMPACT SOCKETS, 6 POINT, METRIC

Black Industrial Finish

Product Code	Size (MM)	A OAL (Inches)	B Drive End Diameter (Inches)	C Working End Diameter (Inches)	D Broach Depth (Inches)	E Bolt Clearance Depth (Inches)	F Bolt Clearance Diameter (Inches)	Nose Length (Inches)	Uses RET RING® Number	Use O-Ring / Pin
6M-617A	17	2	1 5/8	1 5/32	17/32	1 1/32	1/2	1	6-1X	6-1A / 6-2B
6M-619A	19	2	1 5/8	1 1/4	17/32	1 1/32	11/16	1	6-1X	6-1A / 6-2B
6M-620A	20	2	1 5/8	1 3/8	35/64	1 1/32	11/16	1	6-1X	6-1A / 6-2B
6M-622A	22	2	1 5/8	1 1/2	19/32	1 1/32	11/16	1	6-1X	6-1A / 6-2B
6M-624A	24	2	1 5/8	1 35/64	11/32	1 1/32	11/16	1	6-1X	6-1A / 6-2B
6M-627A	27	2	1 5/8	1 11/16	3/4	1 1/32	1 1/16	1 5/16	6-1X	6-1A / 6-2B
6M-630	30	2 3/32	1 5/8	1 27/32	47/64	1 1/8	47/64	1 13/32	6-1X	6-1A / 6-2B
6M-631	31	2 1/8	1 5/8	1 15/16	3/4	1 3/16	1 7/32	1 7/16	6-1X	6-1A / 6-2B
6M-632	32	2 1/8	1 3/4	2	13/16	1 3/16	1 1/4	1 7/16	6-1X	6-1A / 6-2C
6M-634	34	2 1/8	1 3/4	2	7/8	1 3/16	1 21/64	1 7/16	6-1X	6-1A / 6-2C
6M-635	35	2 1/4	1 3/4	2 1/8	7/8	1 5/16	1 3/8	1 9/16	6-1X	6-1A / 6-2C
6M-636	36	2 1/4	1 3/4	2 1/8	7/8	1 5/16	1 13/32	1 9/16	6-1X	6-1A / 6-2C
6M-638	38	2 1/4	1 3/4	2 1/4	15/16	1 5/16	1 1/2	1 9/16	6-1X	6-1A / 6-2C
6M-641	41	2 5/8	1 3/4	2 13/32	1 1/8	1 11/16	1 39/64	1 15/16	6-1X	6-1A / 6-2C
6M-646	46	2 5/8	1 3/4	2 19/32	1 1/8	1 21/32	1 13/16	1 15/16	6-1X	6-1A / 6-2C

MS-6-8H 8 Piece 3/4" Drive Shallow 6 Point Impact Socket Set on Clip Rail

Contents Include:

Product Code	Size (MM)	Product Code	Size (MM)	Product Code	Size (MM)
6M-619A	19	6M-627A	27	6M-636	36
6M-622A	22	6M-630	30	6M-641	41
6M-624A	24	6M-632	32		

Features

- SUPERTORQUE® lobular openings for greater turning power without deforming the fastener.
- Designed for maximum engagement on 6 point fasteners.
- Suitable for use with pneumatic and electric impact wrenches.
- Specially heat treated for impact use to provide long life, safety, and durability.
- Drive end features pin retention hole and groove.

Made in U.S.A.

35812 35830

WILLIAMS®

3/4" DRIVE ONE PIECE IMPACT HEX BIT DRIVERS, MM

Black Industrial Finish

Product Code	Size (Inches)	OAL (Inches)	Product Code	Size (Inches)	OAL (Inches)	Product Code	Size (Inches)	OAL (Inches)
35810	10	3 1/2	35819	19	3 1/2	35830	30	3 1/2
35812	12	3 1/2	35821	21	3 1/2	35832	32	3 1/2
35814	14	3 1/2	35824	24	3 1/2			
35817	17	3 1/2	35827	27	3 1/2			

Fed. Spec: ANSI B107.2

38936 10 Piece 3/4" Drive One Piece Impact Hex Bit Drivers, MM

Contents Include:

Product Code	Size (Inches)	Product Code	Size (Inches)	Product Code	Size (Inches)
35810	10	35819	19	35830	30
35812	12	35821	21	35832	32
35814	14	35824	24		
35817	17	35827	27		

38936

WILLIAMS

27 PIECE 1" DRIVE SOCKET AND DRIVE TOOL SET

12 Point SAE, with Metal Box

Product Code	Description
WSX-28TB	27 Piece Tool Set with TB-12 Metal Tool Box
WSX-28	27 Piece Tool Set Only

Contents Include:

Drive Tools:

Product Code	Description
X-20	20" Sliding T-Handle/Head
X-41C	34 3/16" Flex Handle
X-51B	20" Ratchet
X-110	8" Extension
X-115	16" Extension

Shallow 12-Point Sockets

Product Code	Size (Inches)
X-1234	1 1/16
X-1236	1 1/8
X-1240	1 1/4
X-1242	1 5/16
X-1244	1 3/8
X-1246	1 7/16
X-1248	1 1/2

Shallow 12-Point Sockets

Product Code	Size (Inches)
X-1252	1 5/8
X-1258	1 13/16
X-1260	1 7/8
X-1264	2
X-1268	2 1/8
X-1270	2 3/16
X-1272	2 1/4
X-1276	2 3/8
X-1280	2 1/2
X-1282	2 9/16
X-1284	2 5/8
X-1288	2 3/4
X-1294	2 15/16
X-1296	3
X-12100	3 1/8

Made in U.S.A.

Features

- All tools are professional quality, made of high-grade chrome vanadium steel.
- Sockets feature SUPERTORQUE® lobular openings for greater turning power without deforming the fastener.
- Metal tool box made for years of rugged use.

WSX-28TB

WILLIAMS

19 PIECE 1" DRIVE SOCKET AND DRIVE TOOL SET

12 Point SAE, with Metal Box

Product Code	Description
WSX-21TB	19 Piece Tool Set with TB-12 Metal Tool Box
WSX-21	19 Piece Tool Set Only

Contents Include:

Drive Tools:

Product Code	Description
X-20	20" Sliding T-Handle / Head
X-41C	34 3/16" Flex Handle
X-51B	20" Ratchet
X-110	8" Extension
X-115	16" Extension

Shallow 12-Point Sockets

Product Code	Size (Inches)
X-1248	1 1/2
X-1252	1 5/8
X-1258	1 13/16

Shallow 12-Point Sockets

Product Code	Size (Inches)
X-1260	1 7/8
X-1264	2
X-1270	2 3/16
X-1272	2 1/4
X-1276	2 3/8
X-1280	2 1/2
X-1282	2 9/16
X-1284	2 5/8
X-1288	2 3/4
X-1294	2 15/16
X-1296	3

Made in U.S.A.

Features

- All tools are professional quality, made of high-grade chrome vanadium steel.
- Sockets feature SUPERTORQUE® lobular openings for greater turning power without deforming the fastener.
- Metal tool box made for years of rugged use.

WSX-21TB

WSX-20TB

WILLIAMS

19 PIECE 1" DRIVE SOCKET AND DRIVE TOOL SET

12 Point SAE, with Metal Box

Product Code	Description
WSX-20TB	19 Piece Tool Set with TB-12 Metal Tool Box
WSX-20	19 Piece Tool Set Only

Contents Include:

Drive Tools:

Product Code	Description
X-20	20" Sliding T-Handle/Head
X-41C	34 3/16" Flex Handle
X-51B	20" Ratchet
X-110	8" Extension
X-115	16" Extension

Shallow 12-Point Sockets

Product Code	Size (Inches)
X-1234	1 1/16
X-1236	1 1/8
X-1240	1 1/4

Shallow 12-Point Sockets

Product Code	Size (Inches)
X-1242	1 5/16
X-1244	1 3/8
X-1246	1 7/16
X-1248	1 1/2
X-1252	1 5/8
X-1258	1 13/16
X-1260	1 7/8
X-1264	2
X-1270	2 3/16
X-1272	2 1/4
X-1276	2 3/8

Made in U.S.A.

Features

- All tools are professional quality, made of high-grade chrome vanadium steel.
- Sockets feature SUPERTORQUE® lobular openings for greater turning power without deforming the fastener.
- Metal tool box made for years of rugged use.

X-51B

WILLIAMS

1" DRIVE RATCHETS

Integrated Handle, Chrome Finish

Product Code	Description	Length (Inches)	Number of Teeth
X-51B	Chrome Ratchet	20 1/8	24
X-52EHRK	Repair Kit for H-51B		

Fed. Spec: ANSI B107.10M

Made in U.S.A.

Features

- Forged one-piece ratchet provide strength and safety for industrial applications.
- Smooth comfort-grip handle permits all-day use without gloves.
- 24 tooth gear with 15 degree of engagement allows engagement in tight working areas.
- Chrome finish with mirror-like exterior can be easily cleaned after each use.
- Single Pawl ratchet design:
  1) Designed for tighter tolerances between pawl and gear which reduces metal fatigue and slippage under load.
  2) Does not require as many working parts, reducing possible breakage and parts to repair.
- Easy access reverse lever allows user to change working direction quickly and easily with only one hand.
- Spring and plunger socket retention.

WILLIAMS®

1" DRIVE REMOVABLE-HANDLE RATCHETS

Knurled Handle, Chrome Finish

Product Code	Description	Length (Inches)	Number of Teeth
Complete Ratchet			
X-52A1	Ratchet with 36" Handle	41	24
Components			
X-52	Ratchet Head Only	7 13/16	24
X-52H36	Handle Only	36	24
X-52EHRK	Repair Kit for H-51AB1 and H-51AB		

Note: Head Bore and Handle End Diameter: 1-7/64"
Fed. Spec: ANSI B107.10M

Made in U.S.A.

X-52

X-52A1

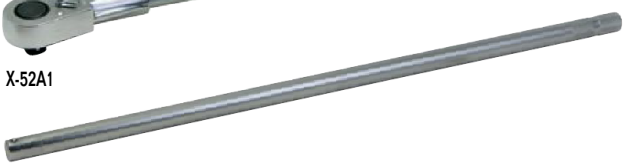
X-52H36

Features

- 24 teeth action provides an 15° ratcheting angle.
- Shift lever reverses action instantly.
- Dual socket retention, with both ball and plunger on male drive for versatility.
- Removable handle makes the tool more versatile, and storage easier.
- Knurled handle provides a non-slip grip.
- Chrome finish models provides increased protection from rust and corrosion.
- Our most rugged, high torque capacity ratchet.

WILLIAMS®

1" DRIVE HANDLES

Chrome and Black Industrial Finish

Product Code	Description	Length (Inches)	Finish
X-41C	Flex Handle Breaker Bar, Knurled Grip	34 3/16	Chrome
X-41CB	Flex Handle Breaker Bar, Knurled Grip	34 3/16	Black Industrial
X-20	Sliding T-Handle	20	Chrome
Sliding T-Handle Components			
X-20B	Handle	20	Chrome
X-20C	Sliding Head	1 15/16	Chrome

Fed. Spec: ANSI B107.10M

Made in U.S.A.

X-41C

X-41CB

X-20

Features

- Chrome plating provides increased protection from rust and corrosion.
- Drive handles provide extra leverage with greater strength than ratchets.
- Square drive slides on T-Handles for versatility.
- Flex handle flex drive swivels 110° in either direction.
- Spring and plunger socket retention.

WILLIAMS®

1" DRIVE EXTENSIONS

Chrome Finish

Product Code	Length (Inches)
X-110	8
X-115	16

Fed. Spec: ANSI B107.10M

Made in U.S.A.

X-110

X-115

Features

- Chrome plating provides increased protection from rust and corrosion.
- Ball and spring socket retention.
- Hole in wall of drive end accommodates plunger for firm tool retention.

X-1234 X-1244

WSX-17

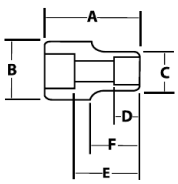

WILLIAMS®

1" DRIVE SHALLOW 12 POINT SOCKETS, SAE

High-Polished Chrome Finish

Product Code	Size (Inches)	A OAL (Inches)	B Drive End Diameter (Inches)	C Working End Diameter (Inches)	D Broach Depth (Inches)	E Bolt Clearance Depth (Inches)	Bolt Clearance Diameter (Inches)	F Nose Length (Inches)
X-1234	1 1/16	2 1/4	2	1 5/8	3/4	1 1/16	13/16	7/8
X-1236	1 1/8	2 1/4	2	1 3/4	3/4	1 1/16	13/16	7/8
X-1240	1 1/4	2 3/8	2	1 7/8	3/4	1 1/8	13/16	7/8
X-1242	1 5/16	2 1/2	2	2 1/16	13/16	1 9/32	15/16	1 9/16
X-1244	1 3/8	2 1/2	2	2 1/8	7/8	1 11/32	1 13/32	1 9/16
X-1246	1 7/16	2 5/8	2	2 3/16	1	1 15/32	1 1/2	1 11/16
X-1248	1 1/2	2 3/4	2	2 1/4	1	1 19/32	1 9/16	1 13/16
X-1252	1 5/8	2 7/8	2	2 3/8	1 1/8	1 3/4	1 11/16	1 15/16
X-1254	1 11/16	2 7/8	2	2 3/8	1 3/16	1 9/16	1 3/4	1 15/16
X-1256	1 3/4	3	2	2 9/16	1 1/4	1 27/32	1 13/16	2 1/16
X-1258	1 13/16	3 1/8	2 1/8	2 5/8	1 1/4	1 31/32	1 7/16	2 3/16
X-1260	1 7/8	3 1/4	2 1/8	2 3/4	1 7/16	2 3/32	1 7/16	2 5/16
X-1264	2	3 3/8	2 1/8	2 15/16	1 1/2	2 1/4	1 7/16	2 7/16
X-1268	2 1/8	3 1/2	2 1/4	3 1/8	1 1/2	2 11/32	1 7/16	2 9/16
X-1270	2 3/16	3 5/8	2 1/4	3 1/8	1 17/32	2 15/32	2 1/4	2 11/16
X-1272	2 1/4	3 3/4	2 1/4	3 1/4	1 5/8	2 5/8	2 11/32	2 23/32
X-1276	2 3/8	3 7/8	2 1/4	3 3/8	1 5/8	2 3/4	2 3/8	2 13/16
X-1280	2 1/2	4 1/8	2 1/4	3 1/2	1 3/4	2 31/32	2 1/2	3 1/16
X-1282	2 9/16	4 1/8	2 1/4	3 9/16	1 13/16	2 31/32	2 9/16	3 3/16
X-1284	2 5/8	4 1/4	2 1/4	3 5/8	1 7/8	3 3/32	2 5/8	3 1/8
X-1288	2 3/4	4 1/2	2 1/4	3 3/4	2	3 3/8	2 3/4	3 9/16
X-1294	2 15/16	4 27/32	2 1/4	4	2 1/8	3 23/32	2 15/16	3 25/32
X-1296	3	4 7/8	2 1/4	4 1/8	2 1/8	3 3/4	3	3 27/32
X-12100	3 1/8	4 31/32	2 1/4	4 1/4	2 1/8	3 27/32	3 1/8	3 29/32

Fed. Spec: ANSI B107.1

WSX-17 17 Piece 1" Drive Shallow 12-Point Socket Set
Contents Include:

Product Code	Size (Inches)	Product Code	Size (Inches)	Product Code	Size (Inches)
X-1234	1 1/16	X-1248	1 1/2	X-1264	2
X-1236	1 1/8	X-1252	1 5/8	X-1268	2 1/8
X-1240	1 1/4	X-1254	1 11/16	X-1270	2 3/16
X-1242	1 5/16	X-1256	1 3/4	X-1272	2 1/4
X-1244	1 3/8	X-1258	1 13/16	X-1276	2 3/8
X-1246	1 7/16	X-1260	1 7/8		

Features

Made in U.S.A.

- SUPERTORQUE® lobular openings for greater turning power without deforming the fastener.
- Designed for quick engagement on both 6 and 12 point fasteners.

7-107

7-140B

7-8

WILLIAMS®

1" DRIVE IMPACT EXTENSIONS AND ACCESSORIES

Black Industrial Finish

Product Code	Description	Length (Inches)	Use RET RING®	Use O-Ring / Pin	Socket Retention
7-107	Impact Extension	7 1/4	7-2X	7-1B / 7-2D	Through Hole and Pin
7-113	Impact Extension	13	7-2X	7-1B / 7-2D	Through Hole and Pin
7-140B	Impact Universal Joint	4 1/2	7-3X	7-1B / 7-2D	Through Hole and Pin
7-6	3/4"M x 1"F Adapter	3	7-2X	7-1B / 7-2D	Through Hole and Pin
7-8	1 1/2"M x 1"F Adapter	3 3/8	7-2X	7-1B / 7-2D	Through Hole and Pin

Fed. Spec: ANSI B107.2

Made in U.S.A.

Features

- Specially heat treated for impact use to provide long life, safety, and durability.
- Pin and o-ring or RET RING® (sold separately) secure tools onto impact wrench for safety and convenience.
- Universal joint provides 55° range of motion.
- Suitable for use with pneumatic and electric impact wrenches.
- Drive end features pin retention hole and groove.

WILLIAMS®

1" DRIVE IMPACT EXTENSIONS AND ACCESSORIES

Black Industrial Finish

Product Code	Description	Length (Inches)	Use RET RING®	Use O-Ring / Pin	Socket Retention
39003	Impact Extension	7	7-2XS	7-1B / 7-2D	Through Hole and Pin
39004	Impact Extension	13	7-2XS	7-1B / 7-2D	Through Hole and Pin
39002	Impact Universal Joint	4 ½	7-3XS	7-1B / 7-2D	Through Hole and Pin
39005	3/4"M X 1"F Adapter	3	7-2XS	7-1B / 7-2D	Through Hole and Pin
39006	1-1/2"M X 1"F Adapter	3 ⅜	7-2XS	7-1B / 7-2D	Through Hole and Pin

Fed. Spec: ANSI B107.2

Features

- Specially heat treated for impact use to provide long life, safety, and durability
- Pin and o-ring or RET RING® (sold separately) secure tools onto impact wrench for safety and convenience
- Universal joint provides 55° range of motion
- Suitable for use with pneumatic and electric impact wrenches
- Drive end features pin retention hole and groove

WILLIAMS®

1" DRIVE RET RING® ONE-PIECE IMPACT RETAINING RINGS

Product Code	Inside Dia. (Inches)	Application
7-1X	1 ¾	Fits Competitive Impact Sockets
7-2X	1 15/16	Fits Williams 1" Drive Tools with "B" Dimension of 2 ⅛" and 2 ¼"
7-3X	2 ⅛	Fits Williams 1" Drive Tools with "B" Dimension of 2 ⅜"
7-4X	2 ½	Fits Competitive Impact Sockets
7-5X	2 ⅝	Fits Competitive Impact Sockets

Features

- Quickly secures impact sockets to impact wrenches.
- Securely retains sockets and accessories to square drive of impact wrench.
- For 1" Drive impact tools with pin retention hole and groove.
- Made of oil resistant material.
- RET RING® is a trademark of FTL Enterprises, Inc.

USA Made in U.S.A.

7-1X

WILLIAMS®

1" DRIVE IMPACT RETAINING PINS AND RINGS

Black Industrial Finish

Product Code	Description	Diameter	Length	Application
7-1B	Impact Retaining O-Ring	2	NA	Fits Williams Impact Tools with "B" Dimension to 2-3/8"
7-2D	Impact Retaining Pin	3/16	1 ¾	Fits Williams Impact Tools with "B" Dimension to 2-3/8"
7-1C	Impact Retaining O-Ring	3 ¼	NA	Fits Williams Impact Tools with "B" Dimension of 3-1/4"
7-2F	Impact Retaining Pin	3/16	2 ⅞	Fits Williams Impact Tools with "B" Dimension of 3-1/4"

Features

- Specially heat treated for impact use to provide long life, safety, and durability.
- Suitable for use with pneumatic and electric impact wrenches.
- For 1" Drive impact tools with pin retention hole and groove.

USA Made in U.S.A.

7-1B

7-2D

WILLIAMS®

1" DRIVE RET RING® ONE-PIECE IMPACT RETAINING RINGS WITH CRUSH GAUGE

Product Code	Inside Dia. (Inches)	Product Code	Inside Dia. (Inches)
7-1XS	1 ¾	7-4XS	2 ¼
7-2XS	2	7-5XS	2 ½
7-3XS	2 ⅛	7-6XS	2 ⅝

Features

- Fits all Williams 1" Drive Sockets and Accessories
- Crush Gage on the resin pin indicates when a socket is excessively worn and should be replaced.
- Securely retains sockets and accessories to square drive of impact wrench
- For 1" drive impact tools with pin retention hole and groove
- Made of oil resistant material
- RET RING® is a trademark of FTL Enterprises, Inc.

7-1XS

WILLIAMS®

1" DRIVE SHALLOW IMPACT SOCKETS, 6 POINT, SAE

Black Industrial Finish

7-654

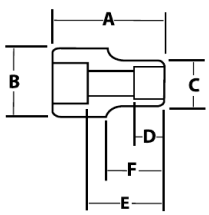

Product Code	Size (Inches)	A OAL (Inches)	B Drive End Diameter (Inches)	C Working End Diameter (Inches)	D Broach Depth (Inches)	E Bolt Clearance Depth (Inches)	F Bolt Clearance Diameter (Inches)	Nose Length (Inches)	Uses RET RING® Number	Use O-Ring / Pin
7-624	3/4	2 1/8	2 1/8	1 7/16	11/16	15/16	3/4	7/8	7-2XS	7-1B / 7-2D
7-626	13/16	2 1/8	2 1/8	1 7/16	11/16	15/16	3/4	7/8	7-2XS	7-1B / 7-2D
7-628	7/8	2 1/8	2 1/8	1 1/2	11/16	15/16	3/4	7/8	7-2XS	7-1B / 7-2D
7-630	15/16	2 1/8	2 1/8	1 19/32	5/8	15/16	3/4	7/8	7-2XS	7-1B / 7-2D
7-632	1	2 1/4	2 1/8	1 11/16	11/16	1 1/16	3/4	7/8	7-2XS	7-1B / 7-2D
7-634	1 1/16	2 1/4	2 1/8	1 3/4	11/16	1 1/16	3/4	7/8	7-2XS	7-1B / 7-2D
7-636	1 1/8	2 1/4	2 1/8	1 7/8	11/16	1 1/16	13/16	7/8	7-2XS	7-1B / 7-2D
7-638	1 3/16	2 1/4	2 1/8	1 7/8	11/16	1 1/16	13/16	7/8	7-2XS	7-1B / 7-2D
7-640	1 5/64	2 3/8	2 1/8	2	3/4	1 3/16	15/16	7/8	7-2XS	7-1B / 7-2D
7-642	1 5/16	2 1/2	2 1/8	2 1/16	7/8	1 5/16	1	1	7-2XS	7-1B / 7-2D
7-644	1 3/8	2 1/2	2 1/8	2 1/8	7/8	1 5/16	1 3/8	-	7-2XS	7-1B / 7-2D
7-646	1 7/16	2 1/2	2 1/4	2 1/4	29/32	1 5/16	1 7/16	-	7-2XS	7-1B / 7-2D
7-648	1 1/2	2 5/8	2 1/4	2 11/32	15/16	1 15/32	1 1/2	1 5/8	7-2XS	7-1B / 7-2D
7-650	1 9/16	2 5/8	2 1/4	2 3/8	15/16	1 7/16	1 9/16	1 5/8	7-2XS	7-1B / 7-2D
7-652	1 5/8	2 3/4	2 1/4	2 3/8	1 1/16	1 5/8	1 19/32	1 3/4	7-2XS	7-1B / 7-2D
7-654	1 11/16	2 3/4	2 3/8	2 19/32	1 1/16	1 5/8	1 7/32	1 3/4	7-3XS	7-1B / 7-2D
7-656	1 3/4	2 7/8	2 3/8	2 5/8	1 5/32	1 23/32	1 7/16	1 7/8	7-3XS	7-1B / 7-2D
7-658	1 13/16	2 15/16	2 3/8	2 3/4	1 3/16	1 23/32	1 13/16	1 15/16	7-3XS	7-1B / 7-2D
7-660	1 7/8	2 15/16	2 3/8	2 3/4	1 3/16	1 23/32	1 7/16	1 15/16	7-3XS	7-1B / 7-2D
7-662	1 15/16	2 15/16	2 3/8	2 3/4	1 3/16	1 23/32	1 3/8	1 15/16	7-3XS	7-1B / 7-2D
7-664	2	3 1/8	2 3/8	3	1 9/32	1 31/32	1 13/32	2 1/8	7-3XS	7-1B / 7-2D
7-666	2 1/16	3 1/8	2 3/8	3	1 9/32	1 31/32	1 1/2	2 1/8	7-3XS	7-1B / 7-2D
7-668	2 1/8	3 1/4	2 3/8	3 1/8	1 9/32	1 31/32	1 5/8	2 1/4	7-3XS	7-1B / 7-2D
7-670	2 3/16	3 5/16	2 3/8	3 1/4	1 7/16	2 5/32	1 5/8	2 5/16	7-3XS	7-1B / 7-2D
7-672	2 1/4	3 5/16	2 3/8	3 1/4	1 7/16	2 5/32	1 5/8	2 5/16	7-3XS	7-1B / 7-2D
7-674	2 5/16	3 1/2	2 3/8	3 3/8	1 1/2	2 5/32	1 3/4	2 1/2	7-3XS	7-1B / 7-2D
7-676	2 3/8	3 1/2	2 3/8	3 1/2	1 1/2	2 11/32	1 3/4	2 1/2	7-3XS	7-1B / 7-2D
7-678	2 7/16	3 1/2	2 3/8	3 1/2	1 1/2	2 11/32	1 3/4	2 1/2	7-3XS	7-1B / 7-2D
7-680	2 1/2	3 5/8	2 3/8	3 1/2	1 5/8	2 15/32	2 1/2	2 5/8	7-3XS	7-1B / 7-2D
7-682	2 9/16	3 5/8	2 3/8	3 5/8	1 5/8	2 15/32	2 9/16	2 5/8	7-3XS	7-1B / 7-2D
7-684	2 5/8	3 5/8	2 3/8	3 3/4	1 5/8	2 5/16	1 7/8	2 5/8	7-3XS	7-1B / 7-2D
7-686	2 11/16	3 7/8	2 3/8	3 3/4	1 13/16	2 15/32	2	2 7/8	7-3XS	7-1B / 7-2D
7-688	2 3/4	3 7/8	2 3/8	3 3/4	1 13/16	2 21/32	2 3/4	2 7/8	7-3XS	7-1B / 7-2D
7-690	2 13/16	4	2 3/8	4	1 13/16	2 11/16	2	3	7-3XS	7-1B / 7-2D
7-692	2 7/8	4	2 3/8	4	1 13/16	2 11/16	2	3	7-3XS	7-1B / 7-2D
7-694	2 15/16	4 3/16	2 3/8	4 1/8	2 1/32	2 11/16	2 15/16	3 1/8	7-3XS	7-1B / 7-2D
7-696	3	4 3/8	2 3/8	4 1/4	2 1/16	3 5/16	2 3/8	3 3/8	7-3XS	7-1B / 7-2D
7-6100	3 1/8	4 3/8	2 3/8	4 1/4	2 1/16	3 5/16	2 3/8	3 3/8	7-3XS	7-1B / 7-2D
7-6104	3 1/4	4 3/8	2 3/8	4 1/2	2 1/16	3 1/32	2 3/8	3 3/8	7-3XS	7-1B / 7-2D
7-6108	3 3/8	4 23/32	2 3/8	4 5/8	2 1/4	3 5/16	2 1/2	2 39/64	7-3XS	7-1B / 7-2D
7-6112	3 1/2	4 3/4	2 3/8	4 3/4	2 1/4	3 1/32	2 1/2	2 5/8	7-3XS	7-1B / 7-2D
7-6116	3 5/8	4 3/4	2 3/8	5	2 5/16	3 11/32	2 5/8	2 19/32	7-3XS	7-1B / 7-2D
7-6118	3 11/16	4 3/4	2 3/8	5 5/16	2 7/16	3 13/32	2 3/4	2 15/16	7-3XS	7-1B / 7-2D
7-6120	3 3/4	5 1/16	2 3/8	5 1/8	2 3/8	3 21/64	2 5/8	3 5/32	7-3XS	7-1B / 7-2D
7-6122	3 13/16	5 3/16	2 3/8	5 3/8	2 17/32	3 9/16	2 5/8	3 23/64	7-3XS	7-1B / 7-2D
7-6124	3 7/8	5 1/4	2 3/8	5 1/4	2 9/16	3 25/32	2 3/4	3 1/8	7-3XS	7-1B / 7-2D
7-6126	3 15/16	5 5/16	2 3/8	5 11/32	2 9/16	3 25/32	3	3 3/16	7-3XS	7-1B / 7-2D
7-6128	4	5 3/8	2 3/8	5 1/2	2 9/16	3 25/32	2 7/8	3 15/64	7-3XS	7-1B / 7-2D
7-6130	4 1/16	5 3/8	2 3/8	5 1/2	2 15/32	2 19/32	3	3 33/64	7-3XS	7-1B / 7-2D
7-6132	4 1/8	5 3/8	2 3/8	5 9/16	2 9/16	3 25/32	2 7/8	3 7/32	7-3XS	7-1B / 7-2D
7-6134	4 3/16	5 1/2	2 3/8	6	2 33/64	3 55/64	3	3 41/64	7-3XS	7-1B / 7-2D
7-6136	4 1/4	5 1/2	2 3/8	5 3/4	2 5/8	3 25/32	3 1/8	3 5/16	7-3XS	7-1B / 7-2D
7-6138	4 5/16	5 1/2	2 3/8	5 13/16	2 21/32	3 29/32	3 3/8	3 5/16	7-3XS	7-1B / 7-2D
7-6140	4 3/8	5 5/8	2 3/8	5 27/32	2 5/8	3 25/32	3 1/8	3 39/64	7-3XS	7-1B / 7-2D
7-6142	4 7/16	5 5/8	2 3/8	6	2 43/64	3 25/32	2 5/8	3 19/32	7-3XS	7-1B / 7-2D
7-6144	4 1/2	5 5/8	2 3/8	6	2 5/8	3 25/32	3 1/8	3 13/32	7-3XS	7-1B / 7-2D
7-6146	4 9/16	5 5/8	3 1/4	6 1/2	2 3/4	3 1/2	3 3/8	3 17/32	8-1XS	7-1C - 7-2F
7-6148	4 5/8	5 3/4	3 1/4	6 13/32	3 1/16	3 25/32	3 1/8	3 25/32	8-1XS	7-1C - 7-2F
7-6152	4 3/4	5 3/4	3 1/4	6 5/8	2 57/64	3 29/32	3 1/2	3 23/32	8-1XS	7-1C - 7-2F
7-6156	4 7/8	6	3 1/4	7	3	3 29/32	3 1/2	3 31/32	8-1XS	7-1C - 7-2F
7-6160	5	6 1/4	3 1/4	7	3	4 3/16	3 1/2	4 7/32	8-1XS	7-1C - 7-2F
7-6172	5 3/8	6 1/2	3 1/4	7 1/2	3 9/16	4 5/16	4 49/64	4 1/4	8-1XS	7-1C - 7-2F
7-6184	5 3/4	6 1/2	3 1/4	8 1/4	3 9/16	4 17/32	4	4 9/32	8-1XS	7-1C - 7-2F

Fed. Spec: ANSI B107.2

Features

- SUPERTORQUE® lobular openings for greater turning power without deforming the fastener.
- Designed for maximum engagement on 6 point fasteners.
- Suitable for use with pneumatic and electric impact wrenches.
- Specially heat treated for impact use to provide long life, safety, and durability.

Made in U.S.A.

WILLIAMS®

1" DRIVE SHALLOW IMPACT SOCKETS, 6 POINT, SAE

Black Industrial Finish

Product Code	Size (Inches)	A OAL (Inches)	B Drive End Diameter (Inches)	C Working End Diameter (Inches)	D Broach Depth (Inches)	E Bolt Clearance Depth (Inches)	Bolt Clearance Diameter (Inches)	F Nose Length (Inches)	Uses RET RING® Number	Use O-Ring / Pin
39624	3/4	2 1/8	2 1/8	1 7/16	11/16	15/16	3/4	7/8	7-2XS	7-1B / 7-2D
39626	13/16	2 1/8	2 1/8	1 7/16	11/16	15/16	3/4	7/8	7-2XS	7-1B / 7-2D
39628	7/8	2 1/8	2 1/8	1 1/2	11/16	15/16	3/4	7/8	7-2XS	7-1B / 7-2D
39630	15/16	2 1/8	2 1/8	1 19/32	5/8	15/16	3/4	7/8	7-2XS	7-1B / 7-2D
39632	1	2 1/4	2 1/8	1 11/16	11/16	1 1/16	3/4	7/8	7-2XS	7-1B / 7-2D
39634	1 1/16	2 1/4	2 1/8	1 3/4	11/16	1 1/16	3/4	7/8	7-2XS	7-1B / 7-2D
39636	1 1/8	2 1/4	2 1/8	1 7/8	11/16	1 1/16	13/16	7/8	7-2XS	7-1B / 7-2D
39638	1 3/16	2 1/4	2 1/8	1 7/8	11/16	1 1/16	13/16	7/8	7-2XS	7-1B / 7-2D
39640	1 1/4	2 3/8	2 1/8	2	3/4	1 3/16	15/16	7/8	7-2XS	7-1B / 7-2D
39642	1 5/16	2 1/2	2 1/8	2 1/16	7/8	1 5/16	1	1	7-2XS	7-1B / 7-2D
39644	1 3/8	2 1/2	2 1/8	2 1/8	7/8	1 5/16	1 3/8	-	7-2XS	7-1B / 7-2D
39646	1 7/16	2 1/2	2 1/4	2 1/4	29/32	1 5/16	1 7/16	-	7-2XS	7-1B / 7-2D
39648	1 1/2	2 5/8	2 1/4	2 11/32	15/16	1 15/32	1 1/2	1 5/8	7-2XS	7-1B / 7-2D
39650	1 9/16	2 5/8	2 1/4	2 3/8	15/16	1 7/16	1 9/16	1 5/8	7-2XS	7-1B / 7-2D
39652	1 5/8	2 3/4	2 1/4	2 3/8	1 1/16	1 5/8	1 19/32	1 3/4	7-2XS	7-1B / 7-2D
39654	1 11/16	2 3/4	2 3/8	2 19/32	1 1/16	1 5/8	1 7/32	1 3/4	7-3XS	7-1B / 7-2D
39656	1 3/4	2 7/8	2 3/8	2 5/8	1 5/32	1 23/32	1 7/16	1 7/8	7-3XS	7-1B / 7-2D
39658	1 13/16	2 15/16	2 3/8	2 3/4	1 3/16	1 23/32	1 13/16	1 15/16	7-3XS	7-1B / 7-2D
39660	1 7/8	2 15/16	2 3/8	2 3/4	1 3/16	1 23/32	1 7/16	1 15/16	7-3XS	7-1B / 7-2D
39662	1 15/16	2 15/16	2 3/8	2 3/4	1 3/16	1 23/32	1 3/8	1 15/16	7-3XS	7-1B / 7-2D
39664	2	3 1/8	2 3/8	3	1 9/32	1 31/32	1 13/32	2 1/8	7-3XS	7-1B / 7-2D
39666	2 1/16	3 1/8	2 3/8	3	1 9/32	1 31/32	1 1/2	2 1/8	7-3XS	7-1B / 7-2D
39668	2 1/8	3 1/4	2 3/8	3 1/8	1 9/32	1 31/32	1 5/8	2 1/4	7-3XS	7-1B / 7-2D
39670	2 3/16	3 5/16	2 3/8	3 1/4	1 7/16	2 5/32	1 5/8	2 5/16	7-3XS	7-1B / 7-2D
39672	2 1/4	3 5/16	2 3/8	3 1/4	1 7/16	2 5/32	1 5/8	2 5/16	7-3XS	7-1B / 7-2D
39674	2 5/16	3 1/2	2 3/8	3 3/8	1 1/2	2 5/32	1 3/4	2 1/2	7-3XS	7-1B / 7-2D
39676	2 3/8	3 1/2	2 3/8	3 1/2	1 1/2	2 11/32	1 3/4	2 1/2	7-3XS	7-1B / 7-2D
39678	2 7/16	3 1/2	2 3/8	3 1/2	1 1/2	2 11/32	1 3/4	2 1/2	7-3XS	7-1B / 7-2D
39680	2 1/2	3 5/8	2 3/8	3 1/2	1 5/8	2 15/32	2 1/2	2 5/8	7-3XS	7-1B / 7-2D
39682	2 9/16	3 5/8	2 3/8	3 5/8	1 5/8	2 15/32	2 9/16	2 5/8	7-3XS	7-1B / 7-2D
39684	2 5/8	3 5/8	2 3/8	3 3/4	1 5/8	2 5/16	1 7/8	2 5/8	7-3XS	7-1B / 7-2D
39686	2 11/16	3 7/8	2 3/8	3 3/4	1 13/16	2 15/32	2	2 7/8	7-3XS	7-1B / 7-2D
39688	2 3/4	3 7/8	2 3/8	3 3/4	1 13/16	2 21/32	2 3/4	2 7/8	7-3XS	7-1B / 7-2D
39690	2 13/16	4	2 3/8	4	1 13/16	2 11/16	2	3	7-3XS	7-1B / 7-2D
39692	2 7/8	4	2 3/8	4	1 13/16	2 11/16	2	3	7-3XS	7-1B / 7-2D
39694	2 15/16	4 3/16	2 3/8	4 1/8	2 1/32	2 11/16	2 15/16	3 1/8	7-3XS	7-1B / 7-2D
39696	3	4 3/8	2 3/8	4 1/4	2 1/16	3 5/16	2 3/8	3 3/8	7-3XS	7-1B / 7-2D

Fed. Spec: ANSI B107.2

39654

Features

- SUPERTORQUE® lobular openings for greater turning power without deforming the fastener.
- Designed for maximum engagement on 6 point fasteners.
- Suitable for use with pneumatic and electric impact wrenches.
- Specially heat treated for impact use to provide long life, safety, and durability.

WILLIAMS®

1" DRIVE BUDD® WHEEL IMPACT SOCKET, 6 POINT, SAE

Black Industrial Finish

Product Code	Size (Inches)	A OAL (Inches)	B Drive End Diameter (Inches)	C Working End Diameter (Inches)	D Broach Depth (Inches)	E Bolt Clearance Depth (Inches)	Bolt Clearance Diameter (Inches)
17-648BW	13/16 Square / 1 1/2 Hex	4	1 3/4	2 1/4	1 7/16	2 1/4	1 1/4

Fed. Spec: ANSI B107.2

17-648BW

Features

- SUPERTORQUE® lobular openings for greater turning power without deforming the fastener.
- 13/16" square opening threads stud into wheel.
- 1-1/2" hex opening engages and tightens the wheel lug nut.
- Suitable for use with pneumatic and electric impact wrenches.
- Specially heat treated for impact use to provide long life, safety, and durability.

WILLIAMS®

1" DRIVE DEEP IMPACT SOCKETS, 6 POINT, SAE

Black Industrial Finish

17-660

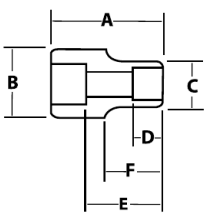

Product Code	Size (Inches)	A OAL (Inches)	B Drive End Diameter (Inches)	C Working End Diameter (Inches)	D Broach Depth (Inches)	E Bolt Clearance Depth (Inches)	Bolt Clearance Diameter (Inches)	F Nose Length (Inches)	Uses RET RING® Number	Use O-Ring / Pin
17-632	1	3	2 1/8	1 19/32	3/4	1 13/16	11/16	7/8	7-2XS	7-1B / 7-2D
17-634	1 1/16	3	2 1/8	1 3/4	3/4	1 13/16	3/4	7/8	7-2XS	7-1B / 7-2D
17-636	1 1/8	3	2 1/8	1 13/16	3/4	1 13/16	13/16	7/8	7-2XS	7-1B / 7-2D
17-638	1 3/16	3	2 1/8	1 13/16	3/4	1 13/16	13/16	7/8	7-2XS	7-1B / 7-2D
17-640	1 1/4	3 1/4	2 1/8	2 1/16	7/8	2 1/16	1 7/32	1	7-2XS	7-1B / 7-2D
17-642	1 5/16	3 1/4	2 1/8	2 1/16	7/8	2 1/16	1 1/8	1	7-2XS	7-1B / 7-2D
17-644	1 3/8	3 1/4	2 1/8	2 1/16	7/8	2 1/16	1 3/8	1	7-2XS	7-1B / 7-2D
17-646	1 7/16	3 1/4	2 1/8	2 1/4	29/32	2 3/32	1 13/32	2 1/4	7-2XS	7-1B / 7-2D
17-648	1 1/2	3 1/2	2 1/4	2 3/8	1	2 11/32	1 15/32	2 1/2	7-2XS	7-1B / 7-2D
17-650	1 9/16	3 1/2	2 1/4	2 3/8	1	2 11/32	1 17/32	2 1/2	7-2XS	7-1B / 7-2D
17-652	1 5/8	3 5/8	2 1/4	2 3/8	1	2 1/2	1 19/32	2 5/8	7-2XS	7-1B / 7-2D
17-654	1 11/16	3 5/8	2 3/8	2 1/2	1 1/8	2 7/16	1 21/32	2 5/8	7-3XS	7-1B / 7-2D
17-656	1 3/4	3 7/8	2 3/8	2 3/4	1 1/8	2 11/16	1 7/16	2 7/8	7-3XS	7-1B / 7-2D
17-658	1 13/16	3 7/8	2 3/8	2 3/4	1 3/16	2 11/16	1 7/16	2 7/8	7-3XS	7-1B / 7-2D
17-660	1 7/8	3 7/8	2 3/8	2 3/4	1 3/16	2 11/16	1 7/16	2 7/8	7-3XS	7-1B / 7-2D
17-662	1 15/16	4 1/8	2 3/8	3	1 1/4	2 15/16	1 7/16	3 1/8	7-3XS	7-1B / 7-2D
17-664	2	4 1/8	2 3/8	3	1 5/16	2 15/16	1 7/16	3 1/8	7-3XS	7-1B / 7-2D
17-666	2 1/16	3 7/8	2 3/8	3	1 5/16	2 15/16	1 1/2	3 1/8	7-3XS	7-1B / 7-2D
17-668	2 1/8	4 3/8	2 3/8	3 1/4	1 5/16	3 3/16	1 5/8	3 3/8	7-3XS	7-1B / 7-2D
17-670	2 3/16	4 3/8	2 3/8	3 1/4	1 1/2	3 3/16	1 5/8	3 3/8	7-3XS	7-1B / 7-2D
17-672	2 1/4	4 3/8	2 3/8	3 1/4	1 1/2	3 3/16	1 5/8	3 3/8	7-3XS	7-1B / 7-2D
17-674	2 5/16	4 1/2	2 3/8	3 1/2	1 1/2	3 5/16	1 7/16	3 1/2	7-3XS	7-1B / 7-2D
17-676	2 3/8	4 1/2	2 3/8	3 1/2	1 1/2	3 5/16	2	3 1/2	7-3XS	7-1B / 7-2D
17-678	2 7/16	4 1/2	2 3/8	3 1/2	1 1/2	3 7/32	1 3/4	3 1/2	7-3XS	7-1B / 7-2D
17-680	2 1/2	4 1/2	2 3/8	3 1/2	1 5/8	3	2 1/2	3 1/2	7-3XS	7-1B / 7-2D
17-682	2 9/16	4 7/8	2 3/8	3 5/8	1 5/8	3 1/2	2	3 7/8	7-3XS	7-1B / 7-2D
17-684	2 5/8	4 11/16	2 3/8	3 3/4	1 5/8	3 11/32	2	3 11/16	7-3XS	7-1B / 7-2D
17-686	2 11/16	4 11/16	2 3/8	3 3/4	1 13/16	2 1/2	2	3 11/16	7-3XS	7-1B / 7-2D
17-688	2 3/4	5 1/8	2 3/8	3 3/4	1 3/4	3 5/8	2	4 1/8	7-3XS	7-1B / 7-2D
17-690	2 13/16	5 1/8	2 3/8	4	1 13/16	2 27/32	2	4 1/8	7-3XS	7-1B / 7-2D
17-692	2 7/8	4 7/8	2 3/8	4	1 13/16	3 9/16	2	3 7/8	7-3XS	7-1B / 7-2D
17-694	2 15/16	4 7/8	2 3/8	4 1/8	2 1/32	2 11/16	2	3 7/8	7-3XS	7-1B / 7-2D
17-696	3	5 1/8	2 3/8	4 1/4	2 1/32	3 7/8	2 3/8	4 1/8	7-3XS	7-1B / 7-2D
17-6100	3 1/8	5 1/8	2 3/8	4 3/8	2 1/32	3 1/32	2 3/8	4 1/8	7-3XS	7-1B / 7-2D
17-6104	3 1/4	5 3/8	2 3/8	4 1/2	2 1/32	3 1/32	2 3/8	4 3/8	7-3XS	7-1B / 7-2D
17-6108	3 3/8	5 1/2	2 3/8	4 5/8	2 1/4	3 5/16	2 1/2	4 1/2	7-3XS	7-1B / 7-2D
17-6112	3 1/2	5 1/2	2 3/8	4 3/4	2 1/4	4 3/32	2 1/2	4 1/2	7-3XS	7-1B / 7-2D
17-6116	3 5/8	5 1/2	2 3/8	5	2 5/16	4 3/32	2 5/8	4 1/2	7-3XS	7-1B / 7-2D
17-6118	3 11/16	5 17/32	2 3/8	5 5/16	2 7/16	3 7/8	2 3/4	4 17/32	7-3XS	7-1B / 7-2D
17-6120	3 3/4	5 9/16	2 3/8	5 1/4	2 1/4	3 19/32	2 13/16	4 9/16	7-3XS	7-1B / 7-2D
17-6122	3 13/16	5 31/32	2 3/8	5 3/8	2 17/32	4 11/32	2 5/8	4 31/32	7-3XS	7-1B / 7-2D
17-6124	3 7/8	5 9/16	2 3/8	5 1/4	2 9/16	3 5/8	3	4 9/16	7-3XS	7-1B / 7-2D
17-6126	3 15/16	6 1/16	2 3/8	5 1/2	2 13/32	4 13/32	3	5 1/16	7-3XS	7-1B / 7-2D
17-6128	4	6 1/8	2 3/8	5 1/2	2 17/32	4 3/32	2 7/8	5 1/8	7-3XS	7-1B / 7-2D
17-6130	4 1/16	6 1/8	2 3/8	5 1/2	2 15/32	4 1/2	3	5 5/32	7-3XS	7-1B / 7-2D
17-6132	4 1/8	6 1/8	2 3/8	5 17/32	2 17/32	4 3/32	2 7/8	5 1/8	7-3XS	7-1B / 7-2D
17-6134	4 3/16	6 7/32	2 3/8	6	2 1/2	4 9/16	3	5 7/32	7-3XS	7-1B / 7-2D
17-6136	4 1/4	6 9/32	2 3/8	5 3/4	2 5/8	4 9/16	3 1/8	5 9/32	7-3XS	7-1B / 7-2D
17-6138	4 5/16	6 11/32	2 3/8	5 13/16	2 21/32	4 5/8	3 3/8	5 11/32	7-3XS	7-1B / 7-2D
17-6140	4 3/8	6 13/32	2 3/8	5 27/32	2 5/8	4 9/16	3 1/8	5 13/32	7-3XS	7-1B / 7-2D
17-6142	4 7/16	6 13/32	2 3/8	6	2 21/32	4 9/16	2 5/8	5 13/32	7-3XS	7-1B / 7-2D
17-6144	4 1/2	7	2 3/8	6	2 3/4	5	3 1/8	6	7-3XS	7-1B / 7-2D
17-6146	4 9/16	7 1/8	3 1/4	6 1/2	2 3/4	4 19/32	3 3/8	6 1/8	8-1XS	7-1C - 7-2F
17-6148	4 5/8	7 1/8	3 1/4	6 13/16	2 13/16	4 3/32	3 1/2	6 1/8	8-1XS	7-1C - 7-2F
17-6152	4 3/4	6 3/4	3 1/4	6 5/8	2 29/32	4 29/32	3 1/2	5 3/4	8-1XS	7-1C - 7-2F
17-6156	4 7/8	7 1/4	3 1/4	7	3	5 5/32	3 1/2	6 1/4	8-1XS	7-1C - 7-2F
17-6160	5	7 3/4	3 1/4	7	3	5 21/32	3 1/2	6 3/4	8-1XS	7-1C - 7-2F
17-6172	5 3/8	8	3 1/4	7 1/2	3 9/16	5 25/32	3 21/32	7	8-1XS	7-1C - 7-2F
17-6184	5 3/4	8	3 1/4	8 1/4	3 9/16	6 1/32	4	7	8-1XS	7-1C - 7-2F

Fed. Spec: ANSI B107.2

Made in U.S.A.

Features

- SUPERTORQUE® lobular openings for greater turning power without deforming the fastener.
- Designed for maximum engagement on 6 point fasteners.
- Suitable for use with pneumatic and electric impact wrenches.
- Specially heat treated for impact use to provide long life, safety, and durability.

WILLIAMS®

1" DRIVE SHALLOW IMPACT SOCKETS, 6 POINT, METRIC

Black Industrial Finish

Product Code	Size (MM)	A OAL (Inches)	B Drive End Diameter (Inches)	C Working End Diameter (Inches)	D Broach Depth (Inches)	E Bolt Clearance Depth (Inches)	F Bolt Clearance Diameter (Inches)	F Nose Length (Inches)	Uses RET RING® Number	Use O-Ring / Pin
7M-627	27	2 1/4	2 1/8	1 3/4	11/16	1 1/16	3/4	7/8	7-2XS	7-1B / 7-2D
7M-630	30	2 1/4	2 1/8	1 7/8	11/16	1 1/16	13/16	7/8	7-2XS	7-1B / 7-2D
7M-632	32	2 3/8	2 1/8	2	3/4	1 3/16	15/16	7/8	7-2XS	7-1B / 7-2D
7M-635	35	2 1/2	2 1/8	2 1/8	7/8	1 5/16	1 3/8	-	7-2XS	7-1B / 7-2D
7M-638	38	2 5/8	2 1/4	2 11/32	15/16	1 15/32	1 1/2	1 5/8	7-2XS	7-1B / 7-2D
7M-641	41	2 3/4	2 1/4	2 3/8	1 1/16	1 5/8	1 19/32	1 3/4	7-2XS	7-1B / 7-2D
7M-646	46	2 15/16	2 3/8	2 3/4	1 3/16	1 23/32	1 13/16	1 15/16	7-3XS	7-1B / 7-2D
7M-650	50	3	2 3/8	2 3/4	1 1/4	1 27/32	1 61/64	2	7-3XS	7-1B / 7-2D
7M-660	60	3 1/2	2 3/8	3 1/2	1 1/2	2 11/32	1 3/4	2 1/2	7-3XS	7-1B / 7-2D
7M-665	65	3 5/8	2 3/8	3 5/8	1 5/8	2 1/8	2 1/4	2 5/8	7-3XS	7-1B / 7-2D
7M-670	70	3 7/8	2 3/8	3 3/4	1 13/16	2 21/32	2 3/4	2 7/8	7-3XS	7-1B / 7-2D
7M-675	75	4 3/16	2 3/8	4 1/8	2 1/32	2 11/16	2 15/16	3 1/8	7-3XS	7-1B / 7-2D

7M-650

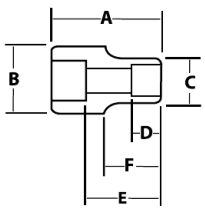

Features

- SUPERTORQUE® lobular openings for greater turning power without deforming the fastener.
- Designed for maximum engagement on 6 point fasteners.
- Suitable for use with pneumatic and electric impact wrenches.
- Specially heat treated for impact use to provide long life, safety, and durability.
- Drive end features pin retention hole and groove.
- Dual marked with corresponding SAE size.

Made in U.S.A.

WILLIAMS®

1-1/2" DRIVE IMPACT EXTENSIONS AND ACCESSORIES

Black Industrial Finish

Product Code	Description	Length (Inches)	Use RET RING®	Use O-Ring / Pin	Socket Retention
8-108	Impact Extension	8	8-1XS	7-1C / 8-2E	Through Hole and Pin
8-115	Impact Extension	15	8-1XS	7-1C / 8-2E	Through Hole and Pin
8-140B	Impact Universal Joint	6 1/16	8-1XS	7-1C / 8-2E	Through Hole and Pin
8-7	1"M x 1 ½"F Adapter	4 1/4	8-1XS	7-1C / 8-2E	Through Hole and Pin
8-8	1 ½"M x 2 ½"F Adapter	6 3/8	8-4XS	9-1D / 9-2G	Through Hole and Pin

Fed. Spec: ANSI B107.2

Made in U.S.A.

8-108

8-140B

8-8

8-7

Features

- Specially heat treated for impact use to provide long life, safety, and durability.
- Pin and o-ring or RET RING® (sold separately) secure tools onto impact wrench for safety and convenience.
- Universal joint provides 55° range of motion.
- Suitable for use with pneumatic and electric impact wrenches.
- Drive end features pin retention hole and groove.

WILLIAMS®

1-1/2" SLIDING T-HANDLE

Black Industrial Finish

Product Code	Length (Inches)	Shaft Diameter (Inches)	Socket Retention
8-20	36	2 ½	Plunger and Spring

Made in U.S.A.

Features

- Drive end slides on bar for additional flexibility.
- Ideal for turning 1-1/2" drive sockets when impact wrench is not available.

8-20

8-2X

1-1/2" DRIVE RET RING® ONE-PIECE IMPACT RETAINING RINGS

Product Code	Inside Dia. (Inches)	Application
8-1X	2 7/8	Fits Williams 1 ½" Drive Tools with "B" Dimension of 3 ¼"
8-2X	3 3/8	Fits Competitive Impact Sockets
8-3X	3 7/8	Fits Competitive Impact Sockets
8-4X	4 3/8	Fits Competitive Impact Sockets

Made in U.S.A.

Features

- Quickly secures impact sockets to impact wrenches.
- Securely retains sockets and accessories to square drive of impact wrench.
- For 1-1/2" Drive impact tools with pin retention hole and groove.
- Made of oil resistant material.
- RET RING® is a trademark of FTL Enterprises, inc.

7-1C

8-2E

1-1/2" DRIVE IMPACT RETAINING PINS AND RINGS

Black Industrial Finish

Product Code	Description	Diameter (Inches)	Length (Inches)	Application
7-1C	Impact Retaining O-Ring	3 ¼	NA	Fits All Williams 1 ½" Drive Sockets and Accessories
8-2E	Impact Retaining Pin	¼	2 7/8	Fits All Williams 1 ½" Drive Sockets and Accessories
9-1D	Impact Retaining O-Ring	4 1/8	NA	
9-2G	Impact Retaining Pin	5/16	2 7/8	

Made in U.S.A.

Features

- Specially heat treated for impact use to provide long life, safety, and durability.
- Suitable for use with pneumatic and electric impact wrenches.
- For 1-1/2" Drive impact tools with pin retention hole and groove.

8-1XS

1-1/2" DRIVE RET RING® ONE-PIECE IMPACT RETAINING RINGS WITH CRUSH GAUGE

Black Industrial Finish

Product Code	Diameter (Inches)
8-1XS	2 7/8
8-2XS	3 3/8
8-3XS	3 7/8
8-4XS	4 3/8

Made in U.S.A.

Features

- Fits all Williams 1-1/2" Drive Sockets and Accessories
- Crush Gage on the resin pin indicates when a socket is excessively worn and should be replaced.
- Securely retains sockets and accessories to square drive of impact wrench
- For 1-1/2" drive impact tools with pin retention hole and groove
- Made of oil resistant material
- RET RING® is a trademark of FTL Enterprises, inc.

WILLIAMS®

1-1/2" DRIVE SHALLOW IMPACT SOCKETS, 6 POINT, SAE

Black Industrial Finish

		A	B	C	D	E		F		
Product Code	Size (Inches)	OAL (Inches)	Drive End Diameter (Inches)	Working End Diameter (Inches)	Broach Depth (Inches)	Bolt Clearance Depth (Inches)	Bolt Clearance Diameter (Inches)	Nose Length (Inches)	Uses RET RING® Number	Use O-Ring / Pin
8-646	1 7/16	3 1/32	3 1/4	2 7/8	57/64	1 25/64	1 7/16	1 7/32	8-1XS	7-1C / 8-2E
8-648	1 1/2	3 3/32	3 1/4	2 7/8	29/32	1 7/16	1 31/64	1 17/64	8-1XS	7-1C / 8-2E
8-652	1 5/8	3 3/16	3 1/4	2 29/32	1 1/32	1 9/16	1 5/8	1 21/64	8-1XS	7-1C / 8-2E
8-654	1 11/16	3 1/4	3 1/4	2 31/32	1 1/16	1 9/16	1 11/16	1 39/64	8-1XS	7-1C / 8-2E
8-656	1 3/4	3 9/32	3 1/4	3 1/32	1 1/32	1 21/32	1 21/32	1 9/16	8-1XS	7-1C / 8-2E
8-658	1 13/16	3 21/64	3 1/4	3 3/32	1 5/32	1 11/64	1 13/16	1 5/8	8-1XS	7-1C / 8-2E
8-660	1 7/8	3 3/8	3 1/4	3 5/32	1 7/32	1 3/4	1 7/8	1 23/32	8-1XS	7-1C / 8-2E
8-664	2	3 7/16	3 1/4	3 1/2	1 9/32	1 13/16	2	1 51/64	8-1XS	7-1C / 8-2E
8-666	2 1/16	3 1/2	3 1/4	3 1/2	1 13/32	1 55/64	2 1/16	1 55/64	8-1XS	7-1C / 8-2E
8-668	2 1/8	3 9/16	3 1/4	3 1/2	1 27/64	1 59/64	2 1/8	1 59/64	8-1XS	7-1C / 8-2E
8-670	2 3/16	3 21/32	3 1/4	3 1/2	1 7/16	2	2 3/16	2 1/64	8-1XS	7-1C / 8-2E
8-672	2 1/4	3 3/4	3 1/4	3 9/16	1 17/32	2 1/8	2 1/4	2 1/8	8-1XS	7-1C / 8-2E
8-676	2 3/8	3 7/8	3 1/4	3 25/32	1 9/16	2 1/4	2 3/8	2 17/64	8-1XS	7-1C / 8-2E
8-678	2 7/16	3 15/16	3 1/4	3 25/32	1 9/16	2 19/64	2 7/16	2 5/16	8-1XS	7-1C / 8-2E
8-680	2 1/2	4	3 1/4	3 7/8	1 19/32	2 3/8	2 31/64	2 1/64	8-1XS	7-1C / 8-2E
8-682	2 9/16	4 1/32	3 1/4	3 29/32	1 5/8	2 13/32	2 9/16	2 3/64	8-1XS	7-1C / 8-2E
8-684	2 5/8	4 3/32	3 1/4	4	1 11/16	2 15/32	2 5/8	2 7/64	8-1XS	7-1C / 8-2E
8-688	2 3/4	4 7/32	3 1/4	4 5/32	1 13/16	2 7/16	2 3/4	2 15/64	8-1XS	7-1C / 8-2E
8-692	2 7/8	4 5/16	3 1/4	4 5/16	1 7/8	2 11/16	2 5/8	2 9/32	8-1XS	7-1C / 8-2E
8-694	2 15/16	4 3/8	3 1/4	4 3/8	1 29/32	2 3/4	2 5/8	2 23/64	8-1XS	7-1C / 8-2E
8-696	3	4 7/16	3 1/4	4 7/16	1 5/16	2 27/32	2 5/8	2 13/32	8-1XS	7-1C / 8-2E
8-698	3 1/16	4 1/2	3 1/4	4 9/16	1 31/32	2 7/8	2 5/8	2 15/32	8-1XS	7-1C / 8-2E
8-6100	3 1/8	4 9/16	3 1/4	4 5/8	2	3	2 5/8	2 1/2	8-1XS	7-1C / 8-2E
8-6104	3 1/4	4 21/32	3 1/4	4 25/32	2 1/8	3	2 5/8	2 19/32	8-1XS	7-1C / 8-2E
8-6108	3 3/8	4 3/4	3 1/4	4 15/16	2 7/32	3 1/8	2 5/8	2 43/64	8-1XS	7-1C / 8-2E
8-6110	3 7/16	4 27/32	3 1/4	5	2 9/32	3 7/32	2 5/8	2 3/4	8-1XS	7-1C / 8-2E
8-6112	3 1/2	4 29/32	3 1/4	5 1/16	2 5/16	3 1/4	2 5/8	2 13/16	8-1XS	7-1C / 8-2E
8-6116	3 5/8	5 1/8	3 1/4	5 1/4	2 13/32	3 7/16	2 5/8	3	8-1XS	7-1C / 8-2E
8-6120	3 3/4	5 1/8	3 1/4	5 3/8	2 15/32	3 1/2	2 5/8	3 1/32	8-1XS	7-1C / 8-2E
8-6122	3 13/16	5 3/16	3 1/4	5 3/8	2 17/32	3 7/8	2 5/8	3 3/32	8-1XS	7-1C / 8-2E
8-6124	3 7/8	5 1/4	3 1/4	5 17/32	2 9/16	3 5/8	2 5/8	3 5/32	8-1XS	7-1C / 8-2E
8-6128	4	5 13/32	3 1/4	5 21/32	2 5/8	3 25/32	2 5/8	3 9/32	8-1XS	7-1C / 8-2E
8-6132	4 1/8	5 9/16	3 1/4	5 13/16	2 3/4	3 59/64	2 5/8	3 7/16	8-1XS	7-1C / 8-2E
8-6136	4 1/4	5 11/16	3 1/4	5 31/32	2 13/16	4 1/16	2 5/8	3 9/16	8-1XS	7-1C / 8-2E
8-6138	4 5/16	5 25/32	3 1/4	6 1/32	2 7/8	4 5/32	2 5/8	3 21/32	8-1XS	7-1C / 8-2E
8-6140	4 3/8	5 27/32	3 1/4	6 3/32	2 29/32	4 7/32	2 5/8	3 21/32	8-1XS	7-1C / 8-2E
8-6144	4 1/2	6	3 1/4	6 1/4	3 1/32	4 3/8	2 5/8	3 15/16	8-1XS	7-1C / 8-2E
8-6148	4 5/8	6 1/16	3 1/4	6 13/16	3 1/16	4 7/16	3 1/2	4 3/32	8-1XS	7-1C / 8-2E
8-6152	4 3/4	6 1/8	3 1/4	6 9/16	3 1/8	4 1/2	2 5/8	4	8-1XS	7-1C / 8-2E
8-6156	4 7/8	6 3/4	3 1/4	7	3 1/8	5 7/64	3 1/2	4 19/32	8-1XS	7-1C / 8-2E
8-6160	5	6 3/4	3 1/4	7 1/8	3 1/16	5 7/64	3 1/2	4 9/16	8-1XS	7-1C / 8-2E
8-6172	5 3/8	7	3 1/4	7 5/16	3 1/4	5 1/8	4	4 29/32	8-1XS	7-1C / 8-2E
8-6184	5 3/4	7	3 1/4	7 5/8	3 1/2	5 1/8	3 3/4	4 7/8	8-1XS	7-1C / 8-2E
8-6196	6 1/8	7 1/4	5	8 1/2	3 11/16	5 3/8	4 1/2	5 1/16	8-4XS	9-1D / 8-2E
8-6208	6 1/2	7 1/2	5	9 1/4	3 1/2	5 5/8	5	5 9/64	8-4XS	9-1D / 8-2E
8-6220	6 7/8	7 7/8	5	9 1/4	3 7/8	6	4 3/4	5 33/64	8-4XS	9-1D / 8-2E
8-6232	7 1/4	8 1/8	5	10	4 1/2	6 1/4	5 1/2	5 49/64	8-4XS	9-1D / 8-2E
8-6244	7 5/8	8 1/4	5	10 3/4	4 13/16	6 3/8	6 1/2	5 57/64	8-4XS	9-1D / 8-2E
8-6256	8	8 3/8	5	11	5 1/16	6 1/2	7	6 1/64	8-4XS	9-1D / 8-2E

8-696

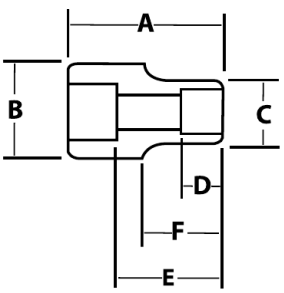

Fed. Spec: ANSI B107.2

Made in U.S.A.

Features

- SUPERTORQUE® lobular openings for greater turning power without deforming the fastener.
- Designed for maximum engagement on 6 point fasteners.
- Suitable for use with pneumatic and electric impact wrenches.
- Specially heat treated for impact use to provide long life, safety, and durability.

Screwdrivers

Screwdrivers

Square Shank
- Comfort-grip handle with thumb stop allows for increased turning power while maintaining grip comfort and reducing hand slippage.
- Chrome blades prevent corrosion and can be easily cleaned after work application.
- Square shank allows the easy use of a wrench for additional turning torque.

Comfort Grip
- Hi-polish chrome blades prevent corrosion and can be easily cleaned.
- Comfort-grip handle with thumb stop allows for added turning power without discomfort or slippage.

Ratcheting And T-Handle
- Ergonomically designed, high impact plastic handle for greater user comfort and control.
- Heavy duty ratcheting mechanism for dependable, consistent operation.
- Powerful magnet within shank securely holds bits during use.
- Easy access bit storage in handle.

Ergonomic
- Three component ergonomically designed handle provides comfort and maximum grip even with oily hands.
- Color coded handle indicates tip type and shows tip type symbol on bottom of handle for quick identification.
- Handle length designed to optimize correct hand position for quick turning and precision control.

202,020

BAHCO

6 PIECE THRU-BLADE SLOTTED & PHILLIPS® SCREWDRIVER SETS W/HEX BLADES & BOLSTERS

Bi-Mold Comfort Grip Handles

Product Code	Description
202,020	6 Piece Thru-Blade Slotted & Phillips® Screwdriver Sets w/Hex Blades & Bolsters

Contents Include:

Product Code	Overall Length (Inches)	Blade Length (Inches)	Tip Width/Point Size
038.055.100	8 ½	5	7/32
038.065.125	10	6	¼
038.080.150	11½	7	5/16
039.001.100	8 ½	4	#1 Phillips®
039.002.125	10	5	#2 Phillips®
039.003.150	11 ½	6	#3 Phillips®

Features

- Metal striking cap at top of handle gives ultimate protection during jobs requiring high impact and added force
- Thru-Blade shank continues through the handle before contacting the metal striking cap for ultimate strength
- Elastomer surface and double shaped handle for added comfort and maximum turning power
- Rudolite® plastic provides high impact resistance to the tool and a perfect joint between the handle and shank
- Black oxide tips prevent chipping of chrome to reduce possible contamination at work location

202,021

BAHCO

6 PIECE THRU-BLADE SLOTTED & POZIDRIV SCREWDRIVER SETS W/HEX BLADES & BOLSTERS

Bi-Mold Comfort Grip Handles

Product Code	Description
202,021	Thru-Blade Slotted & Pozidriv Screwdriver Sets w/Hex Blades & Bolsters

Contents Include:

Product Code	Overall Length (Inches)	Blade Length (Inches)	Tip Width/Point Size
038.055.100	8 ½	5	7/32
038.065.125	10	6	¼
038.080.150	11 ½	7	5/16
040.001.100	8 ½	4	#1 PZ
040.002.125	10	5	#2 PZ
040.003.150	11 ½	6	#3 PZ

Features

- Metal striking cap at top of handle gives ultimate protection during jobs requiring high impact and added force
- Thru-Blade shank continues through the handle before contacting the metal striking cap for ultimate strength
- Elastomer surface and double shaped handle for added comfort and maximum turning power
- Rudolite® plastic provides high impact resistance to the tool and a perfect joint between the handle and shank
- Black oxide tips prevent chipping of chrome to reduce possible contamination at work location

PRECISION SCREWDRIVER SETS

Three Component Handle with Black Oxide Tips

Product Code	Description
706-1	6 Piece Precision Screwdriver Set Phillips® / Slotted

Contents Include:

1.5 mm Slotted	3.0 mm Slotted
2.0 mm Slotted	# 0 Phillips®
2.5 mm Slotted	# 1 Phil lips®

Product Code	Description
706-2	6 Piece Precision Screwdriver Set Phillips® / Slotted

Contents Include:

1.0 mm Slotted	1.8 mm Slotted
1.2 mm Slotted	# 00 Phillips®
1.5 mm Slotted	# 0 Phillips®

Product Code	Description
706-3	6 Piece Precision Screwdriver Set Pozidriv / Slotted

Contents Include:

1.0 mm Slotted	1.8 mm Slotted
1.2 mm Slotted	# 2 Pozidriv
1.5 mm Slotted	# 2.5 Pozidriv

Product Code	Description
706-4	7 Piece Precision Screwdriver Set Phillips® / Slotted / Torx

Contents Include:

1.5 mm Slotted	# 0 Phillips®	6 mm Torx
2.5 mm Slotted	# 1 Phillips®	8 mm Torx
3.5 mm Slotted		

706-1

Features

- The three component ergonomically designed handle provides comfort and maximum grip even with oily hands
- Color coded handles indicates tip type and show tip type symbol on bottom of handle for quick identification
- Chrome blades prevent corrosion and can be easily cleaned
- Black oxide tips prevent chipping of chrome to reduce possible contamination at work location

12 PIECE ERGO® MIXED SCREWDRIVER SET

Three Component Handle with Black Oxide Tips

Product Code	Description
808512	12 Piece ergo® Screwdriver Set Phillips® / Slotted / Pozidriv

Contents Include:

Product Code	Overall Length (Inches)	Blade Length (Inches)	Tip Width / Point Size
BE-8020L	6	3	1/8
BE-8150	8 3/4	4	7/32
BE-8160	7 3/4	3	Phillips® #1
BE-8210	7	3	3/32
BE-8220	9	5	1/8
BE-8240	11 3/4	7	5/32
BE-8600	6 1/2	2 3/16	Phillips® #0
BE-8610	7 3/4	3	Phillips® #1
BE-8620	8 3/4	4	Phillips® #2
BE-8810	7 3/4	3	Pozidriv® 1
BE-8820	8 3/4	1	Pozidriv® 2
BE-8890	14 1/2	8	9/16

808512

Features

- Contains 6 slotted, 4 Phillips®, and 2 Pozidriv® screwdrivers
- The three component ergonomically designed handle provides comfort and maximum grip even with oily hands
- Color coded handles indicates tip type and show tip type symbol on bottom of handle for quick identification
- Chrome blades prevent corrosion and can be easily cleaned
- Black oxide tips prevent chipping of chrome to reduce possible contamination at work location

808506

6 PIECE ERGO® MIXED SCREWDRIVER SET

Three Component Handle with Black Oxide Tips

Product Code	Description
808506	6 Piece ergo® Screwdriver Set Phillips® / Slotted

Contents Include:

Product Code	Overall Length (Inches)	Blade Length (Inches)	Tip Width / Point Size
BE-8020L	6	3	1/8
BE-8150	8 3/4	4	7/32
BE-8160	7 3/4	3	Phillips® #1
BE-8240	11 3/4	7	5/32
BE-8610	7 3/4	3	Phillips® #1
BE-8620	8 3/4	4	Phillips® #2

Features

- Contains 3 slotted and 3 Phillips® screwdrivers
- The three component ergonomically designed handle provides comfort and maximum grip even with oily hands
- Color coded handles indicates tip type and show tip type symbol on bottom of handle for quick identification
- Chrome blades prevent corrosion and can be easily cleaned
- Black oxide tips prevent chipping of chrome to reduce possible contamination at work location

BE-9881

6 PIECE ERGO® MIXED SCREWDRIVER SET

Three Component Handle with Black Oxide Tips

Product Code	Description
BE-9881	6 Piece ergo® Screwdriver Set Phillips® / Slotted

Contents Include:

Product Code	Overall Length (Inches)	Blade Length (Inches)	Tip Width / Point Size
BE-8020	6	2	1/8
BE-8040	8 3/4	4	5/32
BE-8150	8 3/4	4	7/32
BE-8155	9 3/4	5	1/4
BE-8610	7 3/4	3	#1
BE-8620	8 3/4	4	#2

Features

- Contains 4 slotted and 2 Phillips® screwdrivers.
- The three component ergonomically designed handle provides comfort and maximum grip even with oily hands.
- Color coded handles indicates tip type and show tip type symbol on bottom of handle for quick identification.
- Chrome blades prevent corrosion and can be easily cleaned.
- Black oxide tips prevent chipping of chrome to reduce possible contamination at work location.

6 PIECE ERGO® MIXED SCREWDRIVER SET

Three Component Handle with Black Oxide Tips

Product Code	Description
BE-9886	6 Piece ergo® Screwdriver Set Phillips® / Slotted / Pozidriv®

Contents Include:

Product Code	Overall Length (Inches)	Blade Length (Inches)	Tip Width / Point Size
BE-8030	7 3/4	3	9/64
BE-8150	8 3/4	4	7/32
BE-8610	7 3/4	3	Phillips® #1
BE-8620	8 3/4	4	Phillips® #2
BE-8810	7 3/4	3	Pozidriv® #1
BE-8820	8 3/4	4	Pozidriv® #2

Features

- Contains 2 slotted, 2 Pozidriv® and 2 Phillips® screwdrivers.
- The three component ergonomically designed handle provides comfort and maximum grip even with oily hands.
- Color coded handles indicates tip type and show tip type symbol on bottom of handle for quick identification.
- Chrome blades prevent corrosion and can be easily cleaned.
- Black oxide tips prevent chipping of chrome to reduce possible contamination at work location.

BE-9886

5 PIECE ERGO® TORX® SCREWDRIVER SET

Three Component Handle with Black Oxide Tips

Product Code	Description
BE-9885	5 Piece ergo® TORX® Screwdriver Set

Contents Include:

Product Code	Overall Length (Inches)	Blade Length (Inches)	TORX® Size
BE-8910	7 3/8	2 1/2	T10
BE-8915	7 1/2	2 3/4	T15
BE-8920	8	3 1/8	T20
BE-8925	8	3 1/8	T25
BE-8930	8 3/4	4	T30

Features

- The three component ergonomically designed handle provides comfort and maximum grip even with oily hands.
- Black oxide tips prevent chipping of chrome to reduce possible contamination at work location.
- Chrome blades prevent corrosion and can be easily cleaned.

BE-9885

BE-9913

3 PIECE ERGO® ROBERTSON® SCREWDRIVER SET

For Square-recess Screws

Product Code	Description
BE-9913	3 Piece ergo® Robertson® Screwdriver Set

Contents Include:

Product Code	Overall Length (Inches)	Blade Length (Inches)	Tip Size
BE-9001	8	3 1/8	#1
BE-9002	8	3 1/8	#2
BE-9003	8 3/4	4	#3

Features

- The three component ergonomically designed handle provides comfort and maximum grip even with oily hands.
- Black oxide tips prevent chipping of chrome to reduce possible contamination at work location.
- Color coded handles indicates tip type and show tip type symbol on bottom of handle for quick identification.
- Chrome blades prevent corrosion and can be easily cleaned.

100P-8MD

8 PIECE PREMIUM MIXED SCREWDRIVER SET

Comfort-Grip Handle With Round Blade

Product Code	Description
100P-8MD	8 Piece Premium Screwdriver Set Phillips® / Slotted Tips

Contents Include:

Product Code	Overall Length (Inches)	Blade Length (Inches)	Tip Width / Point Size
SDR-24	7 7/8	4	1/4
SDR-26	10 11/16	6	5/16
SDR-28	12 3/4	8	3/8
SDP-1-3	6 1/4	3	#1
SDP-2-4	7 15/16	4	#2
SDP-3-6	10 1/2	6	#3
SDE-43	6 11/16	3	3/16" Electrician's Tip
SDE-46	9 11/16	6	3/16" Electrician's Tip

Made in U.S.A.

Features

- Contains 3 slotted, 3 Phillips®, and 2 Electrician's screwdrivers.
- Comfort-grip handle with thumb stop allow for added turning power without discomfort or slippage.
- Chrome blades prevent corrosion and can be easily cleaned.
- Blades are made from special alloy steel for extra strength.
- Vapor-blasted tips grip fasteners and prevent chipping, extending tool life.
- Hex bolsters on shafts allow a wrench to be used for extra turning power.
- Snap Pouch 50003

WILLIAMS®

5 PIECE PREMIUM MIXED SCREWDRIVER SET

Comfort-Grip Handle With Round Blade

Product Code	Description
100P-5MD	5 Piece Premium Screwdriver Set Phillips® / Slotted Tips

Contents Include:

Product Code	Overall Length (Inches)	Blade Length (Inches)	Tip Width / Point Size
SDR-22	6 1/8	3	3/16
SDR-24	7 7/8	4	1/4
SDR-26	10 11/16	6	5/16
SDP-1-3	6 1/4	3	#1 Phillips
SDP-2-4	7 15/16	4	#2 Phillips

Made in U.S.A.

Features

- Contains 3 slotted and 2 Phillips® screwdrivers.
- Comfort-grip handle with thumb stop allow for added turning power without discomfort or slippage.
- Chrome blades prevent corrosion and can be easily cleaned.
- Blades are made from special alloy steel for extra strength.
- Vapor-blasted tips grip fasteners and prevent chipping, extending tool life.
- Hex bolsters on shafts allow a wrench to be used for extra turning power.
- Snap Pouch 50003

100P-5MD

WILLIAMS®

6 PIECE PREMIUM SLOTTED SCREWDRIVER SET

Comfort-Grip Handle

Product Code	Description
100P-6SD	6 Piece Premium Slotted Screwdriver Set

Contents Include:

Product Code	Overall Length (Inches)	Blade Length (Inches)	Tip Width
SDR-22	6 1/8	3	3/16
SDR-24	7 7/8	4	1/4
SDR-26	10 11/16	6	5/16
SDR-28	12 11/16	8	3/8
SDR-30	14 3/4	10	7/16
SDS-33	17 13/16	12	3/8

Made in U.S.A.

Features

- Comfort-grip handle with thumb stop allow for added turning power without discomfort or slippage.
- Chrome blades prevent corrosion and can be easily cleaned.
- Blades are made from special alloy steel for extra strength.
- Vapor-blasted tips grip fasteners and prevent chipping, extending tool life.
- Hex bolsters on shafts allow a wrench to be used for extra turning power.
- Snap Pouch 50007

100P-6SD

100P-6PD

WILLIAMS®

6 PIECE PREMIUM PHILLIPS® SCREWDRIVER SET

Comfort-Grip Handle With Round Blade

Product Code	Description
100P-6PD	6 Piece Premium Phillips® Screwdriver Set

Contents Include:

Product Code	Overall Length (Inches)	Blade Length (Inches)	Point Size
SDP-1-3	6 1/4	3	#1
SDP-2-4	7 15/16	4	#2
SDP-2-8	12	8	#2
SDP-3-6	10 1/2	6	#3
SDP-4-6	10 3/4	6	#4
SDP-2-ST	3 1/2	1 1/2	#2

Made in U.S.A.

Features

- Comfort-grip handle with thumb stop allow for added turning power without discomfort or slippage.
- Chrome blades prevent corrosion and can be easily cleaned.
- Blades are made from special alloy steel for extra strength.
- Vapor-blasted tips grip fasteners and prevent chipping, extending tool life.
- Hex bolsters on shafts allow a wrench to be used for extra turning power.
- Snap Pouch 50003

24008

WILLIAMS®

12 PIECE COMBINATION SCREWDRIVER SET

Bi-Mold Comfort Grip Handles

Product Code	Description
24008	12 Piece Combination Screwdriver Set

Contents Include:

Product Code	Overall Length (Inches)	Blade Length (Inches)	Tip Width / Point Size / TORX® Size
24203	3 7/8	1 1/2	3/16
24205	7 3/4	4	3/16
24217	3 7/8	1 1/2	1/4
24219	8 1/4	4	1/4
24229	10 3/16	6	1/4
24237	10 9/16	6	5/16
24249	5 11/16	3	#1
24251	3 7/8	1 1/2	#2
24253	8 1/4	4	#2
24259	10 9/16	6	#3
24265	7 3/4	4	T15
24269	8 1/4	4	T25

Features

- Contains 6 slotted, 4 Phillips® and 2 TORX® screwdrivers.
- Bi-Mold handles provide comfortable grip, reducing hand fatigue.
- Set packed in a vinyl pouch.
- Handle end shows size and style for easy identification.
- Chrome blades prevent corrosion and can be easily cleaned.
- Snap Pouch 50007

WILLIAMS®

8 PIECE COMBINATION SCREWDRIVER SET

Bi-Mold Comfort Grip Handles

Product Code	Description
24006	8 Piece Combination Screwdriver Set

Contents Include:

Product Code	Overall Length (Inches)	Blade Length (Inches)	Tip Width / Point Size
24205	7 3/4	4	3/16
24217	3 7/8	1 1/2	1/4
24219	8 1/4	4	1/4
24237	10 9/16	6	5/16
24241	12 9/16	8	3/8
24249	5 11/16	3	#1
24251	3 7/8	1 1/2	#2
24253	8 1/4	4	#2

Features

- Contains 5 slotted and 3 Phillips® screwdrivers.
- Bi-Mold handles provide comfortable grip, reducing hand fatigue.
- Set packed in a vinyl pouch.
- Handle end shows size and style for easy identification.
- Chrome blades prevent corrosion and can be easily cleaned.
- Snap Pouch 50005

24006

WILLIAMS®

6 PIECE SLOTTED TIP SCREWDRIVER SET

Bi-Mold Comfort Grip Handles

Product Code	Description
24004	6 Piece Slotted Tip Screwdriver Set

Contents Include:

Product Code	Overall Length (Inches)	Blade Length (Inches)	Tip Width (Inches)
24203	3 7/8	1 1/2	3/16
24205	7 3/4	4	3/16
24217	3 7/8	1 1/2	1/4
24219	8 1/4	4	1/4
24237	10 9/16	6	5/16
24241	12 9/16	8	3/8

Features

- Bi-Mold handles provide comfortable grip, reducing hand fatigue.
- Set packed in a vinyl pouch.
- Handle end shows size and style for easy identification.
- Chrome blades prevent corrosion and can be easily cleaned.
- Snap Pouch 50005

24004

24002

WILLIAMS®

4 PIECE CABINET TIP SCREWDRIVER SET

Bi-Mold Comfort Grip Handles

Product Code	Description
24002	4 Piece Cabinet Tip Screwdriver Set

Contents Include:

Product Code	Overall Length (Inches)	Blade Length (Inches)	Tip Width (Inches)
24201	6 11/16	4	1/8
24207	6 13/16	3	3/16
24211	9 3/4	6	3/16
24213	13 11/16	10	3/16

Features

- Bi-Mold handles provide comfortable grip, reducing hand fatigue.
- Set packed in a vinyl pouch.
- Handle end shows size and style for easy identification.
- Chrome blades prevent corrosion and can be easily cleaned.

24012

WILLIAMS®

6 PIECE PHILLIPS® SCREWDRIVERS SET

Bi-Mold Comfort Grip Handles

Product Code	Description
24012	6 Piece Phillips Screwdrivers Set

Contents Include:

Product Code	Overall Length (Inches)	Blade Length (Inches)	Tip Width (Inches)
24247	3 7/8	1 1/2	1
24249	5 11/16	3	1
24251	3 7/8	1 1/2	2
24253	8 1/4	4	2
24257	12 1/8	8	2
24259	10 9/16	6	3

Features

- Bi-mold handles provide comfortable grip, reducing hand fatigue
- Handle end shows size and style for easy identification

24010

WILLIAMS®

6 PIECE TORX® SCREWDRIVER SET

Bi-Mold Comfort Grip Handles

Product Code	Description
24010	6 Piece Torx® Screwdriver Set

Contents Include:

Product Code	Overall Length (Inches)	Blade Length (Inches)	TORX® Size
24263	7 1/4	4	T10
24265	7 1/4	4	T15
24267	7 3/4	4	T20
24269	8 1/4	4	T25
24271	8 1/4	4	T27
24273	8 1/4	4	T30

Features

- Bi-Mold handles provide comfortable grip, reducing hand fatigue.
- Set packed in a vinyl pouch.
- Handle end shows size and style for easy identification.
- Chrome blades prevent corrosion and can be easily cleaned.

BAHCO

MAGNETIC RATCHETING SCREWDRIVERS

Comfort Grip Handle

Product Code	Description/ Handle Style	Overall Length (Inches)	Bits Included
808050	Standard Length	10	Yes *
808050L	Standard Length with LED Light	10	Yes *
808050P	Swivel Pistol Grip	10	Yes *
808050S	Stubby	4	No
808050TS	T-Handle Stubby	4	No

Features

- *Includes 6 bits: 2 slotted, #1 Phillips®, #2 Phillips®, PZ1, PZ2
- Ratchet is easily reversed no repositioning of the hand needed
- Bit Storage easy push button release
- Blade with magnetic 1/4" bit holder to hold the bits
- Two component oval handle with high friction surface provides comfort and increased torque
- Knurled blade for fast spinning of the fastener
- Easy bit storage in handle
- Pistol handle swivels and locks at 30° position for application of higher torque when necessary

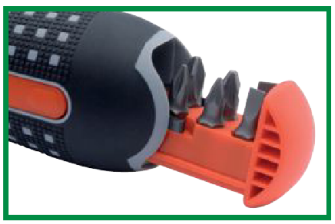

808050

808050L

808050P

WRS-1

WILLIAMS

MAGNETIC RATCHETING SCREWDRIVER

Comfort Grip Handle

Product Code	Overall Length (Inches)	Blade Length (Inches)
WRS-1	9	4

Made in U.S.A.

Features

- Includes 5 bits: 2 slotted, #1 Phillips®, #2 Phillips®, and T-15 Torx®.
- Ergonomically designed handle for greater user comfort and control.
- Hi-impact plastic handle for durability and flexibility in all types of work applications.
- Heavy-duty 3-way On-Off-Locked ratcheting mechanism allows consistent and smooth operation.
- Powerful magnetic shank securely holds bit in place before, during and after the job application.
- Stainless steel shank eliminates problems of chrome chipping or rust.
- Easy bit storage in handle.
- Accepts all standard 1/4" hex shank bits.

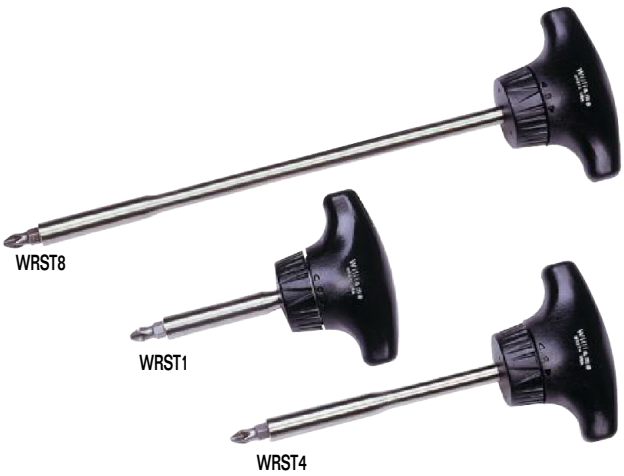
WRST8

WRST1

WRST4

WILLIAMS

T-HANDLE RATCHETING SCREWDRIVER

Comfort Grip T-Handles

Product Code	Overall Length (Inches)	Blade Length (Inches)
WRST1	3 7/8	2
WRST4	5 13/16	3 7/8
WRST8	9 13/16	7 7/8

Made in U.S.A.

Features

- Includes #2 Phillips® bit.
- Ergonomically designed T-Handle fits the palm and provides extra leverage.
- Hi-impact plastic handle for durability and flexibility in all types of work applications.
- Heavy-duty 3-way On-Off-Locked ratcheting mechanism allows consistent and smooth operation.
- Stainless steel shank eliminates problems of chrome chipping or rust.
- Accept all standard 1/4" hex shank bits.

BE-8577

808050A

BAHCO

1/4" HEX SHANK BIT HOLDERS

3-Component Handle

Product Code	Overall Length (Inches)	Bits Included
BE-8577	9 29/64	No
*808050A	10	PH1, Ph2, PZ1,PZ2, SL4.5, SL5.5
*808050TORX	10	T10, T15, T20, T25, T30, T40

Features

- The three component ergonomically designed handle provides comfort and maximum grip even with oily hands
- Scientific 11-step ergonomic design optimizes correct hand position for quick turning and precision control
- Accepts all standard 1/4" hex shank bits
- *Cartridge style bit holder in handle stores six bits

THRU-BLADE SLOTTED SCREWDRIVERS W/HEX BLADES & BOLSTERS

Premium Comfort Grip Handles and Blades

Product Code	Overall Length (Inches)	Blade Length (Inches)	Tip Width (Inches)
038.055.100	8 1/2"	5	7/32
038.065.125	10	6	1/4
038.080.150	11 1/2"	7	5/16
038.100.175	12 1/2"	7	3/8
038.120.200	13 1/2"	8	1/2
038.140.200	13 1/2"	9	9/16

Features

- Metal striking cap at top of handle gives ultimate protection during jobs requiring high impact and added force
- Thru-Blade shank continues through the handle before contacting the metal striking cap for ultimate strength
- Elastomer surface and double shaped handle for added comfort and maximum turning power
- Rudolite® plastic provides high impact resistance to the tool and a perfect joint between the handle and shank
- Black oxide tips prevent chipping of chrome to reduce possible contamination at work location

038.065.125

ERGO® SLOTTED SCREWDRIVERS WITH BOLSTER

Three Component Handle with Black Oxide Tips and Bolster

Product Code	Overall Length (Inches)	Blade Length (Inches)	Tip Width (Inches)
BE-8160	9 3/4	5	5/16
BE-8260	11 3/4	7	5/16
BE-8865 **	13 1/2	7	5/16
BE-8870 **	13 1/2	7	3/8
BE-8880 **	14 1/2	8	1/2
BE-8890 **	14 1/2	8	9/16

** Dual grip handle for two-handed operation provides extra torque when necessary

Features

- The three component ergonomically designed handle provides comfort and maximum grip even with oily hands.
- Color coded handles indicates tip type and show tip type symbol on bottom of handle for quick identification.
- Black oxide tips prevent chipping of chrome to reduce possible contamination at work location.
- Blades are equipped with bolster for use with wrench when extra torque is required.

BE-8880

BE-8150

ERGO® SLOTTED SCREWDRIVERS

Three Component Handle with Black Oxide Tips

Product Code	Overall Length (Inches)	Blade Length (Inches)	Tip Width (Inches)
BE-8150	8 3/4	4	7/32
BE-8144	8 3/4	4	1/4
BE-8155	9 3/4	5	1/4
BE-8250	10 3/4	6	7/32
BE-8255	10 3/4	6	1/4

Features

- The three component ergonomically designed handle provides comfort and maximum grip even with oily hands.
- Color coded handles indicates tip type and show tip type symbol on bottom of handle for quick identification.
- Black oxide tips prevent chipping of chrome to reduce possible contamination at work location.

BE-8355
BE-8210
BE-8240

ERGO® SLOTTED SCREWDRIVERS W/CABINET TIP

ergo® 3-Component Handle

Product Code	Overall Length (Inches)	Blade Length (Inches)	Tip Width (Inches)
BE-8330	3 1/4	1	9/64
BE-8340	3 1/4	1	5/32
BE-8350	3 1/4	1	7/32
BE-8355	3 1/4	1	1/4
BE-8360	3 1/4	1	5/16
BE-8450	4	1 3/4	5/32
BE-8455	4	1 3/4	1/4
BE-8010	6	2	3/32
BE-8020	6	2	1/8
BE-8020L	6	3	1/8
BE-8210	7	3	3/32
BE-8030	7 3/4	3	9/64
BE-8040	8 3/4	4	5/32
BE-8220	9	5	1/8
BE-8230	9 3/4	5	9/64
BE-8240	11 3/4	7	5/32

Features

- The three component ergonomically designed handle provides comfort and maximum grip even with oily hands.
- Color coded handles indicate tip type and show tip type symbol on butt of handle for quick identification.
- Cabinet tip allows access to recessed screws.
- Black oxide tips prevent chipping of chrome to reduce possible contamination at work location.

WILLIAMS®

SLOTTED SCREWDRIVERS

Premium Comfort Grip Handles and Blades

Product Code	Overall Length (Inches)	Blade Length (Inches)	Tip Width (Inches)
SDS-62	3 1/2	1 3/4	1/4
SDR-22	6 1/8	3	3/16
SDR-24	7 7/8	4	1/4
SDR-26	10 11/16	6	5/16
SDR-28	12 11/16	8	3/16
SDR-30	14 3/4	10	7/16
SDS-33	17 13/16	12	3/8

Made in U.S.A.

Features

- Comfort-grip handle with thumb stop allow for added turning power without discomfort or slippage.
- Hi-polish chrome blades prevent corrosion and can be easily cleaned.
- Vapor-blasted tips grip fasteners and prevent chipping, extending tool life.
- Blades are made from special alloy steel for extra strength.
- *SDS-33 features 3/8" heavy-duty square shank

SDR-24

WILLIAMS®

ELECTRICIAN'S SCREWDRIVERS W/THIN BLADE

Premium Comfort Grip Handles and Blades

Product Code	Overall Length (Inches)	Blade Length (Inches)	Tip Width (Inches)
SDE-4	7 15/16	4	1/4
SDE-8	11 15/16	12	1/4
SDE-43	6 11/16	3	3/16
SDE-46	9 11/16	6	3/16
SDE-50	13 3/4	10	3/16
SDE-53	6 13/64	3	1/8

Made in U.S.A.

Features

- Comfort-grip handle with thumb stop allow for added turning power without discomfort or slippage.
- Hi-polish chrome blades prevent corrosion and can be easily cleaned.
- Vapor-blasted tips grip fasteners and prevent chipping, extending tool life.
- Blades are made from special alloy steel for extra strength.

SDE-46

WILLIAMS®

SLOTTED SCREWDRIVERS

Bi-Mold Comfort Grip Handles

Product Code	Overall Length (Inches)	Blade Length (Inches)	Tip Width (Inches)
24203	3 7/8	1 1/2	3/16
24205	7 3/4	4	3/16
24209	9 3/4	6	3/16
24215	12 11/16	9	3/16
24217	3 7/8	1 1/2	1/4
24219	8 1/4	4	1/4
24229	10 3/16	6	1/4
24237	10 9/16	6	5/16
24239	12 9/16	8	5/16
24241	12 9/16	8	3/8
24243	16 1/2	12	3/8

Features

- Bi-mold handles provide comfortable grip, reducing hand fatigue.
- Handle end shows size and style for easy identification.

WILLIAMS®

SLOTTED SCREWDRIVERS W/CABINET TIP

Bi-Mold Comfort Grip Handles

Product Code	Overall Length (Inches)	Blade Length (Inches)	Tip Width (Inches)
24201	6 11/16	4	1/8
24207	6 13/16	3	3/16
24211	9 3/4	6	3/16
24213	13 11/16	10	3/16

Features

- Bi-mold handles provide comfortable grip, reducing hand fatigue.
- Cabinet tip allows access to recessed screws.
- Handle end shows size and style for easy identification.

THRU-BLADE PHILLIPS® SCREWDRIVERS W/HEX BLADES & BOLSTERS

Premium Comfort Grip Handles and Blades

Product Code	Overall Length (Inches)	Blade Length (Inches)	Point Size
039.001.100	8 ½	4	#1
039.002.125	10	5	#2
039.003.150	11 ½	6	#3
039.004.200	13 ½	8	#4

** Dual grip handle for two-handed operation provides extra torque when necessary

Features

- Metal striking cap at top of handle gives ultimate protection during jobs requiring high impact and added force
- Thru-Blade shank continues through the handle before contacting the metal striking cap for ultimate strength
- Elastomer surface and double shaped handle for added comfort and maximum turning power
- Rudolite® plastic provides high impact resistance to the tool and a perfect joint between the handle and shank
- Black oxide tips prevent chipping of chrome to reduce possible contamination at work location

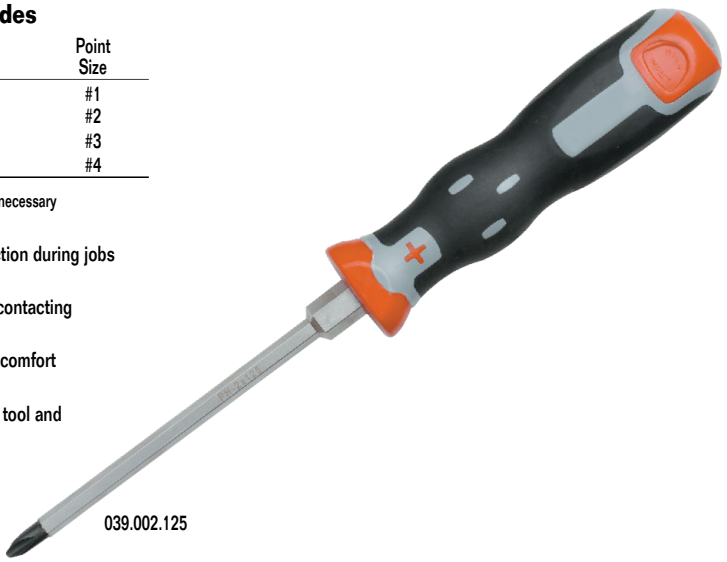

039.002.125

ERGO® PHILLIPS® SCREWDRIVERS WITH BOLSTER

Three Component Handle with Black Oxide Tips and Bolster

Product Code	Overall Length (Inches)	Blade Length (Inches)	Point Size
BE-8630	10 3/4	6	3
BE-8640 **	14 1/4	8	4

** Dual grip handle for two-handed operation provides extra torque when necessary

Features

- The three component ergonomically designed handle provides comfort and maximum grip even with oily hands.
- Color coded handles indicates tip type and show tip type symbol on bottom of handle for quick identification.
- Black oxide tips prevent chipping of chrome to reduce possible contamination at work location.

BE-8630

BE-8640

ergo

BE-8620

BAHCO

ERGO® PHILLIPS® SCREWDRIVERS

Three Component Handle with Black Oxide Tips

Product Code	Overall Length (Inches)	Blade Length (Inches)	Point Size
BE-8600	6 1/2	2 3/16	0
BE-8601	3	1	1
BE-8610	7 3/4	3	1
BE-8610L	12 3/4	8	1
BE-8602	3	1	2
BE-8620	8 3/4	4	2
BE-8620L	12 3/4	8	2

Features

- The three component ergonomically designed handle provides comfort and maximum grip even with oily hands.
- Color coded handles indicates tip type and show tip type symbol on bottom of handle for quick identification.
- Black oxide tips prevent chipping of chrome to reduce possible contamination at work location.

SDP-2-4

WILLIAMS®

PHILLIPS® SCREWDRIVERS W/ROUND BLADES

Premium Comfort Grip Handles and Blades

Product Code	Overall Length (Inches)	Blade Length (Inches)	Point Size
SDP-1-3	6 1/4	3	1
SDP-2-ST	3 3/8	1 1/2	2
SDP-2-4	7 15/16	4	2
SDP-2-8	12	8	2
SDP-3-6	10 1/2	6	3
SDP-4-6	10 3/4	6	4

USA Made in U.S.A.

Features

- Comfort-grip handle with thumb stop allow for added turning power without discomfort or slippage.
- Hi-polish chrome blades prevent corrosion and can be easily cleaned.
- Vapor-blasted tips grip fasteners and prevent chipping, extending tool life.
- Blades are made from special alloy steel for extra strength.

24251

24253

WILLIAMS®

PHILLIPS® SCREWDRIVERS

Bi-Mold Comfort Grip Handles

Product Code	Overall Length (Inches)	Blade Length (Inches)	Point Size
24247	3 7/8	1 1/2	1
24249	5 11/16	3	1
24251	3 7/8	1 1/2	2
24253	8 1/4	4	2
24255	10 3/16	6	2
24257	12 1/8	8	2
24259	10 9/16	6	3

Features

- Bi-mold handles provide comfortable grip, reducing hand fatigue.
- Handle end shows size and style for easy identification.

BAHCO

THRU-BLADE POZIDRIV® SCREWDRIVERS W/HEX BLADES & BOLSTERS

Premium Comfort Grip Handles and Blades

Product Code	Overall Length (Inches)	Blade Length (Inches)	Point Size
040.001.100	8 ½	4	#1
040.002.125	10	5	#2
040.003.150	11 ½	6	#3

Features

- Metal striking cap at top of handle gives ultimate protection during jobs requiring high impact and added force
- Thru-Blade shank continues through the handle before contacting the metal striking cap for ultimate strength
- Elastomer surface and double shaped handle for added comfort and maximum turning power
- Rudolite® plastic provides high impact resistance to the tool and a perfect joint between the handle and shank
- Black oxide tips prevent chipping of chrome to reduce possible contamination at work location

040.003.150

BAHCO

ergo

ERGO® POZIDRIV® SCREWDRIVERS

Three Component Handle with Black Oxide Tips

Product Code	Overall Length (Inches)	Blade Length (Inches)	Point Size
BE-8810	7 3/4	3	1
BE-8820	8 3/4	4	2
BE-8823	10 3/4	6	3

Features

- The three component ergonomically designed handle provides comfort and maximum grip even with oily hands.
- Color coded handles indicates tip type and show tip type symbol on bottom of handle for quick identification.
- Black oxide tips prevent chipping of chrome to reduce possible contamination at work location.

BE-8810

BAHCO

ergo

ERGO® TAMPER RESISTANT TORX® SCREWDRIVERS

Three Component Handle with Black Oxide Tips

Product Code	Overall Length (Inches)	Blade Length (Inches)	TORX® Size
BE-7910	7 3/8	2 5/8	T10
BE-7915	7 1/2	2 3/4	T15
BE-7920	8	3 5/32	T20
BE-7925	8	3 5/32	T25
BE-7927	8 3/4	4	T27
BE-7930	8 3/4	4	T30
BE-7940 **	11 5/8	5 1/8	T40

** Dual grip handle for two-handed operation provides extra torque when necessary

Features

- The three component ergonomically designed handle provides comfort and maximum grip even with oily hands.
- Color coded handles indicates tip type and show tip type symbol on bottom of handle for quick identification.
- Black oxide tips prevent chipping of chrome to reduce possible contamination at work location.

BE-7915

BE-7940

ERGO® TORX® SCREWDRIVERS

Three Component Handle with Black Oxide Tips

Product Code	Overall Length (Inches)	Blade Length (Inches)	TORX® Size
BE-8906	6	2	T6
BE-8907	6 1/4	2 5/32	T7
BE-8908	6 3/8	2 3/8	T8
BE-8909	7 1/4	2 3/8	T9
BE-8910	7 3/8	2 1/2	T10
BE-8915	7 1/2	2 1/4	T15
BE-8920	8	3 1/8	T20
BE-8925	8	3 1/8	T25
BE-8927	8 3/4	4	T27
BE-8930	8 3/4	4	T30
BE-8940 **	11 1/2	5	T40
BE-8945 **	11 1/2	5	T45

** Dual grip handle for two-handed operation provides extra torque when necessary

Features

- The three component ergonomically designed handle provides comfort and maximum grip even with oily hands.
- Color coded handles indicates tip type and show tip type symbol on bottom of handle for quick identification.
- Black oxide tips prevent chipping of chrome to reduce possible contamination at work location.

TORX® SCREWDRIVERS

Bi-Mold Comfort Grip Handles

Product Code	Overall Length (Inches)	Blade Length (Inches)	TORX® Size
24263	7 3/4	4	T10
24265	7 3/4	4	T15
24267	7 3/4	4	T20
24269	8 1/4	4	T25
24271	8 1/4	4	T27
24273	8 1/4	4	T30

Features

- Bi-mold handles provide comfortable grip, reducing hand fatigue.
- Handle end shows size and style for easy identification.

ERGO® ROBERTSON® SCREWDRIVERS

Three Component Handle with Black Oxide Tips For Square Recess Screws

Product Code	Overall Length (Inches)	Blade Length (Inches)	Tip Size (For Screw Sizes)
BE-9001	8	3 1/8	1 (5, 6, 7)
BE-9002	8	3 1/8	2 (8, 9, 10)
BE-9003	8 3/4	4	3 (12, 14)

Features

- The three component ergonomically designed handle provides comfort and maximum grip even with oily hands.
- Color coded handles indicates tip type and show tip type symbol on bottom of handle for quick identification.
- Black oxide tips prevent chipping of chrome to reduce possible contamination at work location.

ERGO® BALL END HEX SCREWDRIVERS

Three Component Handle with Black Oxide Tips

Product Code	Overall Length (Inches)	Blade Length (Inches)	Ball Hex Size (mm)
BE-8702	8 11/32	4 5/16	2mm
BE-8725	8 11/32	4 5/16	2.5mm
BE-8703	8 11/32	4 5/16	3mm
BE-8704	9 1/8	4 5/16	4mm
BE-8705	9 1/8	4 5/16	5mm
BE-8706	10 5/16	4 5/16	6mm
BE-8708 **	10 3/4	5 7/8	8mm
BE-8710 **	12 1/4	5 7/8	10mm

** Dual grip handle for two-handed operation provides extra torque when necessary

Features

- The three component ergonomically designed handle provides comfort and maximum grip even with oily hands.
- Color coded handles indicates tip type and show tip type symbol on bottom of handle for quick identification.
- Black oxide tips prevent chipping of chrome to reduce possible contamination at work location.

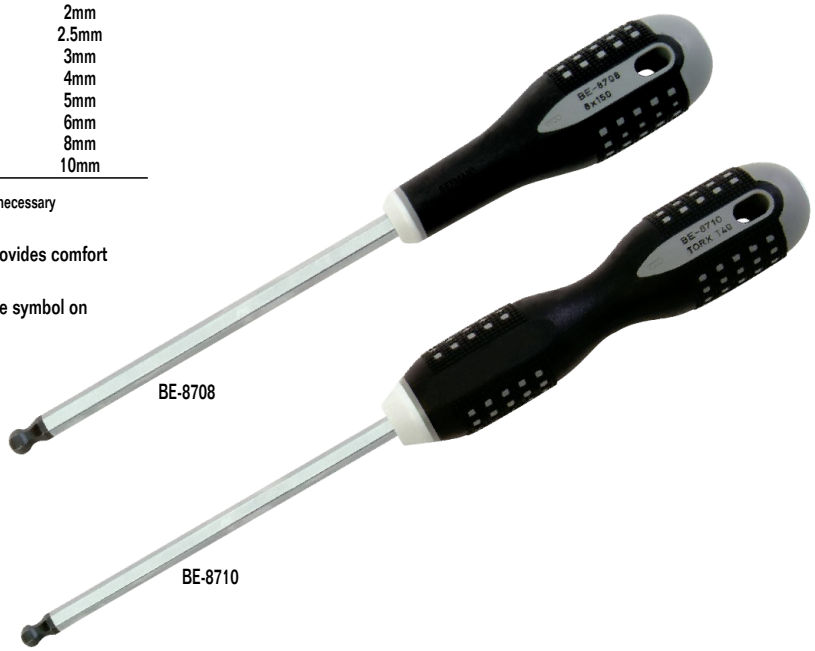

BE-8708

BE-8710

OFFSET SCREWDRIVERS

Cushion Grip Handle

Product Code	Overall Length (Inches)	Tip/Width
24101	4	Slotted 3/16
24102	4	Slotted 1/4
24103	6	Slotted 5/16
24104	4	Phillips® # 1 x # 2
24105	8	Phillips® # 3 x # 4

Features

- Blades are made from special alloy steel for extra strength
- One piece tool steel construction
- Tips are 90 degree angled

24101

24050

WILLIAMS®

NUTDRIVERS, SAE

Cushion Grip Handle

Product Code	Overall Length (Inches)	Blade Length (Inches)	Size (Inches)
24401	7	3	3/16
24403	7	3	1/4
24405	7	3	5/16
24407	7	3	11/32
24409	7	3	3/8
24411	7	3	7/16
24413	7	3	1/2

24050 7 Piece Nutdriver Set in Carrying Caddy
Contents Include:

Product Code	Size (Inches)	Product Code	Size (Inches)
24401	3/16	24409	3/8
24403	1/4	24411	7/16
24405	5/16	24413	1/2
24407	11/32		

Features

- Hollow shaft accommodates long bolts or studs.
- Precision machined socket end.
- Cushion grip handle for comfort.
- Size imprinted on color coded ends for easy identification.

24051

WILLIAMS®

LONG SHAFT NUTDRIVERS, SAE

Cushion Grip Handle

Product Code	Overall Length (Inches)	Blade Length (Inches)	Size (Inches)
24415	9	5	3/16
24416	9	5	1/4
24417	9	5	5/16
24418	9	5	11/32
24419	9	5	3/8
24420	9	5	7/16
24421	9	5	1/2
24422	9	5	9/16
24423	9	5	5/8

24051 9 Piece Nutdriver Set in Plastic Tray
Contents Include:

Product Code	Size (Inches)	Product Code	Size (Inches)
24415	3/16	24420	7/16
24416	1/4	24421	1/2
24417	5/16	24422	9/16
24418	11/32	24423	5/8
24419	3/8		

Features

- Hollow shaft accommodates long bolts or studs
- Precision machined socket end
- Cushion grip handle for comfort
- Size imprinted on color coded ends for easy identification

BAHCO

ERGO® NUTDRIVERS, MM

Cushion Grip Handle

Product Code	Overall Length (Inches)	Blade Length (Inches)	Size (mm)
BE-7805	10	5	5
BE-7806	10	5	6
BE-7807	10	5	7
BE-7808	10	5	8
BE-7809	10	5	0

Features

- The three component ergonomically designed handle provides comfort and maximum grip even with oily hands
- Color coded handles indicate tip type and show tip type symbol on butt of handle for quick identification

ergo

BE-7807

WILLIAMS

LONG SHAFT NUTDRIVERS, MM

Cushion Grip Handle

Product Code	Overall Length (Inches)	Blade Length (Inches)	Size (mm)
24451	9	5	4
24452	9	5	5
24453	9	5	5.5
24454	9	5	6
24455	9	5	7
24456	9	5	8
24457	9	5	9
24458	9	5	10
24459	9	5	11
24460	9	5	12
24461	9	5	13
24462	9	5	14

24061 12 Piece Nutdriver Set in Plastic Tray

Contents Include:

Product Code	Size (mm)	Product Code	Size (mm)
24451	4	24457	9
24452	5	24458	10
24453	5.5	24459	11
24454	6	24460	12
24455	7	24461	13
24456	8	24462	14

Features

- Hollow shaft accommodates long bolts or studs
- Precision machined socket end
- Cushion grip handle for comfort
- Size imprinted on color coded ends for easy identification

24061

BAHCO

MAGNETIZER/DEMAGNETIZER

Quick-Release, Narrow Head Design

Product Code	Description
M781	Magnetizer/Demagnetizer

Features

- Easier to drive and retrieve screws after magnetizing.
- Use the demagnetizer to make drivers and other tools safe around electronics

M781

808050S-22

BAHCO

22 PIECE STUBBY RATCHETING SCREWDRIVER SET

Product Code	Description
808050S-22	22 Piece Stubby Ratcheting Screwdriver Set

Contents Include:

- Stubby ratchet Screwdriver
- 1/4" X 1/4" Socket Adaptor
- 1/4" sq x 1/4" hex bit holder 50 mm
- 1/4" sq x 1/4" sq Flexible Socket Adaptor 150 mm
- 1/4" x 1/4" Bit Adaptor
- 8 Pieces S2 zinc Phosphate Bits: PH1, PH2, PZ1, PZ2, T15,T20, SL 4 HEX 3
- 5 Piece 1/4" Sockets: 4,5,6,7,8 mm

KM653QR-BOX/S25

BAHCO

QUICK RELEASE 1/4" HEX BIT HOLDER

25 Pieces Bulk Packed in a Handy Storage Jar

Product Code	Description
KM653QR-BOX/S25	25 Adaptors in Plastic Storage Jar

Features

- Ideal for the tradesman or contractor with high power driver usage.
- Adaptor includes quick release and magnet retention.
- Fits all 1/4" hex shank screwdriver bits.

64TX-T25BOX/S25

BAHCO

HEX BITS IN STORAGE JARS

Bulk Packed in a Handy Plastic Storage Jar

Product Code	Bit Type	Quantity Included
52H1-BOX/S50	#1 Phillips	50
52H2-BOX/S100	#2 Phillips	100
51PZ1-BOX/S50	#1 Pozidriv	50
51PZ2-BOX/S100	#2 Pozidriv	100
64TX-T10BOX/S50	T10 Torx	50
64TX-T15BOX/S50	T15 Torx	50
64TX-T20BOX/S50	T20 Torx	50
64TX-T25BOX/S25	T25 Torx	25
64TX-T30BOX/S25	T30 Torx	25

Features

- Ideal for the tradesman or contractor with high power driver usage.
- Fits all 1/4" hex shank bit holders.
- Reusable is ideal for storing screws, small parts, and tools.

BAHCO

1/4" HEX BIT SETS IN PLASTIC STORAGE CASES

Product Code	Description
SB-59/S15-1	15 Piece Bit Magazine Set

Contents Include (quantity):

- #1 Phillips (1)
- #2 Phillips (2)
- 3/16" Slotted (2)
- Magnetic Quick-Release Bit Holder (1)
- 1/4" Slotted (2)
- #1 Pozidriv (1)
- #2 Pozidriv (2)
- #3 Pozidriv (1)
- T-15 Torx (2)
- T-20 Torx (1)

Product Code	Description
SB-59/S15-2	15 Piece Bit Magazine Set

Contents Include (quantity):

- #2 Phillips (3)
- #2 Pozidriv (3)
- 3/16" Slotted (1)
- T-10 Torx (1)
- Magnetic Quick-Release Bit Holder (1)
- T-15 Torx (1)
- T-20 Torx (1)
- T-25 Torx (1)
- T-27 Torx (1)
- T-30 Torx (1)
- T-40 Torx (1)

Product Code	Description
SB-59/S15-3	15 Piece Bit Magazine Set with Tamper Resistant Bits

Contents Include (one each):

- T-7 Torx
- T-8 Torx
- T-9 Torx
- T-10 Torx
- Magnetic Quick-Release Bit Holder (1)
- T-15 Torx
- T-20 Torx
- T-25 Torx
- T-27 Torx
- T-30 Torx (1)
- T-40 Torx (1)
- 3MM Hex
- 4MM Hex
- 5MM Hex
- 6MM Hex

Product Code	Description
SB-59/S15-4	15 Piece Bit Magazine Set

Contents Include (one each):

- #1 Phillips
- #2 Phillips
- #3 Phillips
- #1 Pozidriv
- Magnetic Quick-Release Bit Holder (1)
- #2 Pozidriv
- #3 Pozidriv
- T-10 Torx
- T-15 Torx
- T-20 Torx
- T-25 Torx
- T-30 Torx
- 3/16" Slotted
- 1/4" Slotted
- 5/16" Slotted

Features

- Each bit set contains 14 hex bits a bit holder.
- Adaptor includes quick release and magnet retention.
- Plastic storage case is ideal for organization of bits.
- Case can be refilled and re-used as bits wear out.
- Four different sets available to satisfy different applications.

SB-59/S15-1

SB-59/S15-2

SB-59/S15-3

SB-59/S15-4

Pliers

Pliers

Long Nose Pliers With Side Cutter

- Jaws are polished with rust-protective coating.
- Cross-cut teeth in tips provide extra gripping power.
- Induction hardened and precisely ground cutting edges stay sharp longer.

Heavy-Duty Diagonal Cutters

- Wider, high leverage jaws for increased cutting power.
- Induction-hardened and precisely ground cutting edges stay sharp longer.

Lineman's Pliers

- Comfortable two-component handles combine durability with a secure non-slip grip.
- High-leverage joint placement increases leverage to reduce the cutting force needed.
- Saw-toothed serrations provide a solid grip on application material.
- Multi-purpose gripping surface behind joint can be used for fish-tape pushing and pulling.

PLS-6A

WILLIAMS®

6 PIECE GENERAL SERVICE PLIERS SET

Double-Dipped Plastic Handles

Product Code	Description
PLS-6A	6 Piece General Service Pliers Set

Contents Include:

Product Code	Description	Product Code	Description
PL-1519C	5" utility superjoint	PL-76C	6 1/2" chain nose side cutters
PL-1520C	10" utility superjoint	23150	7" side cutting
PL-46C	6" diagonal cutting	23503	8 1/4" front-end stripper

Features

- Combines Williams' most popular pliers in to a single set.
- 6 piece set packaged in a roll pouch.

Made in U.S.A.

23054

WILLIAMS®

4 PIECE COMBINATION PLIERS SET

Double-Dipped Plastic Handles

Product Code	Description
23054	4 Piece Combination Pliers Set

Contents Include:

Product Code	Description
23106	11 3/4" groove joint pliers
23403	8" linesman pliers
23407	7" heavy-duty diagonal cutting pliers
23411	8" long nose pliers

Features

- Double-dipped plastic handle grips are comfortable yet durable.
- Jaws are polished with rust-protective coating.
- Packaged in a vinyl bag.

23052

WILLIAMS®

4 PIECE COMBINATION PLIERS SET

Double-Dipped Plastic Handles

Product Code	Description
23052	4 Piece Combination Pliers Set

Contents Include:

Product Code	Description
23102	8" slip joint pliers
23105	9 3/4" groove joint pliers
23407	7" heavy-duty diagonal cutting pliers
23411	8" long nose pliers

Features

- Double-dipped plastic handle grips are comfortable yet durable.
- Jaws are polished with rust-protective coating.
- Packaged in a vinyl bag.

BAHCO BIG-MOUTH ERGO® ADJUSTABLE JOINT PLIERS

True Ergonomic Handles with Bi-Molded Grips

Product Code	Overall Length (Inches)	Maximum Jaw Opening (Inches)	Tip Width (Inches)
8231	8	1 1/2	3/8

Features

- 12" capacity in an 8" pliers!
- One-button setting provides fast and secure jaw width changes with a single touch of the thumb.
- Comfortable ergonomic two-component handles which combines durability and a secure non-slip grip.
- Hardened jaws and teeth for exceptionally tough gripping surface.
- Wide, deep opening jaws have flat and pipe grip jaw so one pair of pliers can be used for more jobs.

8231

ERGO® ADJUSTABLE JOINT PLIERS

True Ergonomic Handles with Bi-Molded Grips

Product Code	Overall Length (Inches)	Maximum Jaw Opening (Inches)	Tip Width (Inches)
8223	8	1 1/2	9/32
8224	10	1 3/4	5/16
8225	12	2 5/32	3/8
8226	16	3	7/16

Features

- Comfortable ergonomic two-component handles which combines durability and a secure non-slip grip.
- Hardened jaws and teeth for exceptionally tough gripping surface.
- One-button setting provides fast and secure jaw width changes with a single touch of the thumb.
- Wide, deep opening jaws have flat and pipe grip jaw so one pair of pliers can be used for more jobs.

8224

ALLIGATOR PLIERS

Double-Dipped Plastic Handles

Product Code	Overall Length (Inches)	Maximum Jaw Opening (Inches)
221D	4 1/2	11/16
222D	6	15/16
223D	7 1/2	1 1/4
224D	9 1/2	1 3/4
225D	12	2 1/4

Features

- Double-dipped plastic handle grips are comfortable yet durable.
- Jaws are phosphate finish for rust protection.
- Parallel jaw grip in all positions to maximum opening.

223D

PL-1524C

WILLIAMS®

UTILITY SUPERJOINT PLIERS

Double-Dipped Plastic Handles

Features	Overall Length (Inches)	Maximum Opening (Inches)	Tip Width (Inches)
PL-1519C	5	1/2	3/16
PL-1520C	10	1 1/2	5/16
PL-1523C	12	2 5/8	1/2
PL-1524C	16	4	1/2

Made in U.S.A.

Features

- Multiple parallel jaw positions are locked in to proper groove for superior non-slip performance.
- Serrated jaws for maximum gripping power.
- Polished heads resist rust and corrosion, extending the tool life.

23104

WILLIAMS®

GROOVE JOINT PLIERS

Double-Dipped Plastic Handles

Product Code	Overall Length (Inches)	Maximum Jaw Opening (Inches)
23104	6 1/4	7/8
23105	9 3/4	1 7/8
23106	11 3/4	2 1/4
23107	15 3/4	4 1/8

Features

- Double-dipped plastic handle grips are comfortable yet durable.
- Jaws are phosphate finish for rust protection.
- Parallel jaw grip in all positions to maximum opening.

ergo®

BAHCO®

2628G

ERGO® SIDE CUTTING COMBINATION PLIERS

Ergonomically Designed Handles with Bi-Molded Grips and On/Off Return Spring

Product Code	Overall Length (Inches)	Jaw Length (Inches)	Maximum Cutting Capacity (Inches)
2628G-160	6 1/4	1 5/16	1/16 Hard Steel
2628G-180	7	1 7/16	5/64 Hard Steel

Features

- ergo® handles provide maximum gripping comfort.
- On/off return spring for higher comfort and higher frequency cutting may be turned off when tool is kept in belt or pocket.
- High-leverage joint placement to reduce the cutting force. Joint design ensures a smooth joint action.
- Heavy-duty design - high performance tool steel construction adds extra strength.
- Comfortable ergonomic two-component handles which combines durability and a secure non-slip grip.

BAHCO

WATER PUMP PLIERS

Double-Dipped Plastic Handles

Product Code	Overall Length (Inches)	Jaw Length (Inches)	Tip Width (Inches)	Description
7224	10	2	5/8	Quick adjust water pump plier
2971G-250	10	1-1/2"	1/2	Water pump plier

Features

- Fast adjustment and memory retention of jaw opening.
- Slim jaws shaped for nuts and pipes.

7224

2971G-250

WILLIAMS

COMBINATION SLIP-JOINT PLIERS

Double-Dipped Plastic Handles

Product Code	Overall Length (Inches)	Jaw Length (Inches)	Tip Width (Inches)
PL-6C	6	1 5/32	3/8
PL-8C	8	1 13/32	3/8
PL-10C	10	1 13/32	1/2

Made in U.S.A.

Features

- Multiple parallel jaw positions are locked in to proper groove for superior non-slip performance.
- Serrated jaws for maximum gripping power.
- Polished heads resist rust and corrosion, extending the tool life.
- Shear type wire cutter extends tool use.

PL-8C

WILLIAMS

COMBINATION SLIP-JOINT PLIERS

Double-Dipped Plastic Handles

Product Code	Overall Length (Inches)
23101	6 1/4
23102	8
23103	9 3/4

Features

- Double-dipped plastic handle grips are comfortable yet durable.
- Jaws are polished with rust-protective coating.
- 2 position joint allows wide range of grip.
- Shear type wire cutter extends tool use.

23101

BAHCO

NUT GRIPPING PLIERS

Heavy-Duty Design with PVC Grips

Product Code	Overall Length (Inches)	Jaw Length (Inches)	Tip Width (Inches)
2979D-180	7	1/2	7/16

Features

- Conical jaws with teeth facing inward provide maximum gripping power.
- Heavy-duty design combined with high performance tool steel construction adds extra strength.

2979D

ergo

BAHCO

ERGO® HIGH LEVERAGE LINESMAN'S PLIERS

True Ergonomic Handles with Bi-Molded Grips

Product Code	Overall Length (Inches)	Jaw Length (Inches)	Maximum Cutting Capacity (Inches)
2653-9	9 1/2	1 9/16	3/32 Hard Steel

Features

- Comfortable two-component handles combine durability with a secure non-slip grip.
- Joint placement increases leverage to reduce the cutting force needed.
- Saw-toothed serrations provide a solid grip on application material.
- Multi purpose serration behind joint - a second gripping surface could be used for fish-tape pushing and pulling.

2653-9

WILLIAMS®

INDUSTRIAL GRADE LINESMAN'S PLIERS

Double-Dipped Plastic Handles

Product Code	Description	Overall Length (Inches)	Jaw Length (Inches)
PL-204C	Electrician's	7	1/2
PL-205C	Electrician's	8 1/2	17/32
PL-209X	New England	9 1/2	3/4

USA Made in U.S.A.

Features

- Designed for wiring, electrical equipment installation and maintenance for utility linemen.
- Polished faces look good and resist corrosion.
- Induction hardened cutting edges stay sharp longer.
- Diamond serrated jaws provide solid grip on wire.
- Double-dipped plastic handle grips are comfortable yet durable.

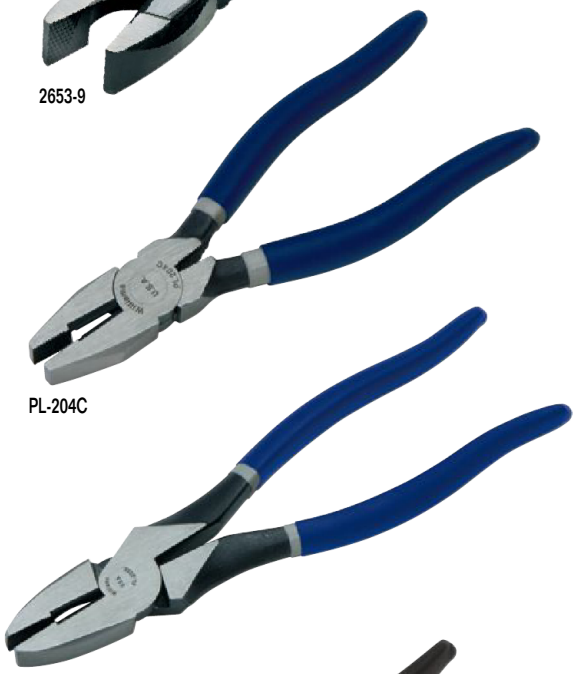

PL-204C

PL-209X

WILLIAMS®

INDUSTRIAL GRADE LINESMAN'S PLIERS

Supplied Without Grips

Product Code	Description	Overall Length (Inches)	Jaw Length (Inches)
PL-208	Linesman's	8 1/2	17/32
PL-209	New England	9 1/2	3/4

USA Made in U.S.A.

Features

- Designed for wiring, electrical equipment installation and maintenance for utility linemen.
- Polished heads resist rust and corrosion, extending the tool life.
- Induction hardened cutting edges stay sharp longer.
- Diamond serrated jaws provide solid grip on wire.
- Supplied without grips - handles are bare steel.

PL-208

PL-209

WILLIAMS®

HEAVY-DUTY PIANO WIRE CUTTING LINESMAN'S PLIERS

Double-Dipped Plastic and Bi-Mold Comfort Grip Handles

Product Code	Overall Length (Inches)	Handle Style	Maximum Cutting Capacity (Inches)
23603	9	Double-Dipped	3/32 Piano Wire

Features

- Specially heat-treated for cutting piano wire and other hard wire.
- High leverage jaws for increase cutting power.
- Cross-cut teeth for extra gripping power.
- Return spring for faster, easier cutting.
- Induction hardened and precisely ground cutting edges stay sharp longer.

23603

WILLIAMS®

STANDARD LINESMAN'S PLIERS

Double-Dipped Plastic Handles

Product Code	Overall Length (Inches)	Jaw Length (Inches)
23402	7	1/2
23403	8	17/32

Features

- High leverage jaws for increase cutting power.
- Cross-cut teeth for extra gripping power.
- Induction hardened and precisely ground cutting edges stay sharp longer.

23402

2203-8

ERGO® HEAVY DUTY STRAIGHT HEAD DIAGONAL CUTTING PLIERS

Piano Wire Cutting and True Ergonomic Handles with Bi-Molded Grips

Product Code	Overall Length (Inches)	Jaw Length (Inches)	Maximum Cutting Capacity (Inches)
2203-8	8 3/16	13/16	3/32 Piano Wire

Features

- Extra wide handles with two-component material reduces stress and strain and increases comfort.
- Lacquer finish protects against rust.
- High frequency hardened cutting edges hold their precision-sharpened cutting surfaces.
- Unique on-off return spring: turn on to reduce hand fatigue, off to store in tool belt or pocket.

2213-8

ERGO® HEAVY DUTY ANGLED HEAD DIAGONAL CUTTING PLIERS

Piano Wire Cutting and True Ergonomic Handles with Bi-Molded Grips

Product Code	Overall Length (Inches)	Jaw Length (Inches)	Maximum Cutting Capacity (Inches)
2213-8	8 1/16	13/16	3/32 Piano Wire

Features

- High-leverage joint placement to reduce the cutting force. Unique screw joint design ensures a smooth joint action.
- Unique on-off return spring: turn on to reduce hand fatigue, off to store in tool belt or pocket.
- The 14° angled head enables better accessibility in working situations and leaves free space for your hand.
- Extra wide handles with two-component material reduces stress and strain and increases comfort.

2101G

ERGO® DIAGONAL CUTTING PLIERS

Piano Wire Cutting and True Ergonomic Handles with Bi-Molded Grips

Product Code	Overall Length (Inches)	Jaw Length (Inches)	Maximum Cutting Capacity (Inches)
2101G-125	4 7/8	9/16	1/16 Piano Wire
2101G-140	5 1/2	5/8	1/16 Piano Wire
2101G-160	6 1/4	3/4	5/64 Piano Wire
2101G-180	7	13/16	3/32 Piano Wire

Features

- Comfortable ergonomic two-component handles which combines durability and a secure non-slip grip.
- Extra wide handle two-component material reduces stress and strain, and to increase comfort.
- Lacquer finish protects against rust.
- High frequency hardened cutting edges hold their precision-sharpened cutting surfaces.

WILLIAMS®

HIGH LEVERAGE DIAGONAL CUTTING PLIERS

Double-Dipped Plastic Handles

Product Code	Description	Overall Length (Inches)	Cutting Blade Length (Inches)
PL-57C	High Leverage Head	7 1/4	15/16
PL-411C	Extra Long Handle, Offset Head	11	1

Made in U.S.A.

Features

- Handles are designed to cut wire with ease.
- Polished heads resist rust and corrosion, extending the tool life.
- Induction hardened cutting edges.

PL-57C

PL-411C

WILLIAMS®

INDUSTRIAL GRADE DIAGONAL CUTTING PLIERS

Double-Dipped Plastic Handles

Product Code	Overall Length (Inches)	Cutting Blade Length (Inches)
PL-44C	4	17/32
PL-45C	5	11/16
PL-46C	6	3/4
PL-47C	7	11/16

Made in U.S.A.

Features

- Handles are designed to cut wire with ease.
- Polished heads resist rust and corrosion, extending the tool life.
- Induction hardened cutting edges.
- Regular flush cutters are used for cutting hard wire.

PL-46C

WILLIAMS®

FLUSH CUT DIAGONAL CUTTING PLIERS WITH SPRING

Double-Dipped Plastic Handles

Product Code	Overall Length (Inches)	Cutting Blade Length (Inches)
PLM-1CS	4 1/4	17/32
PL-40CS	5	11/16

Made in U.S.A.

Features

- Handles are designed to cut wire with ease
- Polished heads resist rust and corrosion, extending the tool life
- Induction hardened cutting edges
- Flush cutters are used for close cutting of medium wire

PL-40CS

PL-48C

WILLIAMS®

PLASTIC CUTTING DIAGONAL PLIERS

Double-Dipped Plastic Handles

Product Code	Overall Length (Inches)	Cutting Blade Length (Inches)
PL-48C	6 3/8	7/8
PL-49C	7 1/2	1 1/8

Features

Made in U.S.A.

- Polished heads resist rust and corrosion, extending the tool life.
- Induction hardened cutting edges.

23406

WILLIAMS®

HEAVY-DUTY DIAGONAL CUTTING PLIERS

Double-Dipped Plastic Handles

Product Code	Overall Length (Inches)
23406	6 1/4
23407	7

Features

- Jaws are polished with rust-protective coating.
- Wider, high leverage jaws for increased cutting power.
- Double-dipped plastic handle grips are comfortable yet durable.
- Induction hardened and precisely ground cutting edges stay sharp longer.

23404

WILLIAMS®

STANDARD DIAGONAL CUTTING PLIERS

Double-Dipped Plastic Handles

Product Code	Overall Length (Inches)
23404	5 1/2
23405	6 1/4

Features

- Jaws are polished with rust-protective coating.
- Double-dipped plastic handle grips are comfortable yet durable.
- Induction hardened and precisely ground cutting edges stay sharp longer.

PL-167

WILLIAMS®

END CUTTING NIPPERS

Double-Dipped Plastic Handles

Product Code	Overall Length (Inches)	Cutting Blade Length (Inches)
PLM-2C	4 1/2	15/32
PL-167	7 1/2	13/16

Features

Made in U.S.A.

- Ideal for cutting wire or nails that are close to the work.
- Polished heads resist rust and corrosion, extending the tool life.
- The wide throat clearance, width of blades and angles of the cutting edges along with the handle leverage provide for easy, clean cutting or nipping.

BAHCO

ERGO® HEAVY DUTY LONG NOSE PLIERS

True Ergonomic Handles with Bi-Molded Grips and On/Off Return Spring

Product Code	Overall Length (Inches)	Jaw Length (Inches)	Maximum Cutting Capacity (Inches)
2533-7	7 1/2	2 7/16	1/16 Hard Steel
2533-8	8 1/4	2 3/8	5/64 Hard Steel

Features

- Comfortable ergonomic two-component handles which combines durability and a secure non-slip grip.
- Unique on-off return spring: turn on to reduce hand fatigue, off to store in tool belt or pocket.
- Saw-toothed shaped, serrated jaws provide maximum gripping surface.
- High performance tool steel construction adds extra strength.

ergo

2533-7

BAHCO

ERGO® LONG NOSE PLIERS

True Ergonomic Handles with Bi-Molded Grips and On/Off Return Spring

Product Code	Overall Length (Inches)	Jaw Length (Inches)	Maximum Cutting Capacity (Inches)
2430G-140	5 1/2	1 1/2	3/64 Hard Steel
2430G-160	6 1/4	1 15/16	1/16 Hard Steel

Features

- Comfortable ergonomic two-component handles which combines durability and a secure non-slip grip.
- Unique on-off return spring: turn on to reduce hand fatigue, off to store in tool belt or pocket.
- High performance tool steel construction adds extra strength.

ergo

2430G

BAHCO

ERGO® 60° CURVED NOSE PLIERS

True Ergonomic Handles with Bi-Molded Grips and On/Off Return Spring

Product Code	Overall Length (Inches)	Jaw Length (Inches)	Maximum Cutting Capacity (Inches)
2427G-160	6 1/4	1 13/16	5/64 Hard Steel
2427G-200	7	2 3/4	5/64 Hard Steel

Features

- Comfortable ergonomic two-component handles which combines durability and a secure non-slip grip.
- Unique on-off return spring: turn on to reduce hand fatigue, off to store in tool belt or pocket.
- High performance tool steel construction adds extra strength.

ergo

2427G

2420G

BAHCO

ERGO® FLAT NOSE PLIERS

True Ergonomic Handles with Bi-Molded Grips and On/Off Return Spring

Product Code	Overall Length (Inches)	Jaw Length (Inches)	Width at Tip (Inches)
2420G-125	5	7/8	5/8

Features

- Comfortable ergonomic two-component handles which combines durability and a secure non-slip grip.
- Unique on-off return spring: turn on to reduce hand fatigue, off to store in tool belt or pocket.
- High performance tool steel construction adds extra strength.
- Saw-toothed shaped, serrated jaws provide maximum gripping surface.

PL-211C

PL-211BC

WILLIAMS

EXTRA LONG REACH CHAIN NOSE PLIERS

Double-Dipped Plastic Handles

Product Code	Description	Overall Length (Inches)	Jaw Length (Inches)
PL-211C	Straight Jaw	11	2 13/16
PL-211BC	45° Bent Nose	11	2 9/16

Made in U.S.A.

Features

- Polished heads resist rust and corrosion, extending the tool life.
- Extra long handles provide access into confined areas and greater holding power at the tip.
- Bent nose model provides access to obstructed areas.

PL-98C

WILLIAMS

HIGH LEVERAGE CHAIN NOSE PLIERS

Double-Dipped Plastic Handles

Product Code	Overall Length (Inches)	Jaw Length (Inches)	Width at Tip (Inches)
PL-98C	8	1 7/32	3/32

Made in U.S.A.

Features

- Polished heads resist rust and corrosion, extending the tool life.
- Longer handles for more convenient use and greater jaw gripping power.

WILLIAMS®

CHAIN NOSE PLIERS

Double-Dipped Plastic Handles

Product Code	Description	Overall Length (Inches)	Jaw Length (Inches)
PL-95C	Short Nose w/cutter	5 1/2	1 5/32
PL-75C	Long Nose	6 3/4	2 5/16
PL-76C	Long Nose w/cutter	6 1/2	1 5/16
PL-77C	Extra Long Nose w/cutter	7 1/2	1 29/32

Made in U.S.A.

Features

- Polished heads resist rust and corrosion, extending the tool life.
- Diamond serrated jaws with industrial hardened cutting edges.

PL-95C

PL-75C

WILLIAMS®

THIN BENT CHAIN NOSE PLIERS

Double-Dipped Plastic Handles

Product Code	Description	Overall Length (Inches)	Jaw Length (Inches)
PL-126C	73° Bent Thin Nose	6 1/4	1 1/4

Made in U.S.A.

Features

- Polished heads resist rust and corrosion, extending the tool life.
- Serrated jaws for extra gripping power.
- 73° bent nose model featured thin jaws angled to reach around obstacles and hard-to-reach spaces.

PL-126C

WILLIAMS®

NEEDLE NOSE PLIERS

Double-Dipped Plastic Handles

Product Code	Description	Overall Length (Inches)	Jaw Length (Inches)
PL-114CS	Short Nose	4 1/2	1
PL-116C	Long Nose	7	2 3/16

Made in U.S.A.

Features

- Polished heads resist rust and corrosion, extending the tool life.
- Serrated jaws provide extra gripping power.
- The PL-114CS short nose model is supplied with a spring and is designed for close, fine electrical and mechanical work.
- The PL-116C long nose model provides excellent gripping ability for use in tight, narrow places.

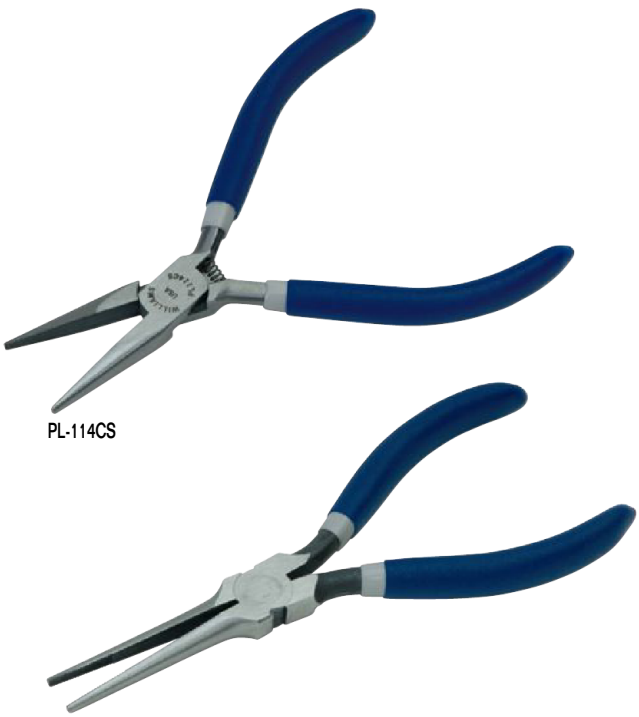

PL-114CS

PL-116C

23409

23410

WILLIAMS®

LONG NOSE PLIERS WITH SIDE CUTTER

Double-Dipped Plastic Handles

Product Code	Description	Overall Length (Inches)
23409	Bent Nose	6 1/4
23411	Straight Nose	8

Features

- Jaws are polished with rust-protective coating.
- Double-dipped plastic handle grips are comfortable yet durable.
- Induction hardened and precisely ground cutting edges stay sharp longer.

PL-146C

PL-149C

WILLIAMS®

DUCK BILL PLIERS

Double-Dipped Plastic Handles

Product Code	Description	Overall Length (Inches)	Jaw Length (Inches)
PL-146C	Standard Jaw	6 1/2	2 1/16
PL-149C	High Leverage	8	1 1/4

USA Made in U.S.A.

Features

- Jaws are polished with rust-protective coating.
- Flat wide nose provides a better grip than the regular needle nose models.

WILLIAMS®

ELECTRICAL MINI PLIERS

Double-Dipped Plastic Handles

Product Code	Description	Overall Length (Inches)	Capacity (AWG)
23541	Mini Cutter	5 1/2	8
23542	Mini Stripper	5 1/2	8-18 Solid/10-22 Stranded
23543	Mini Crimper	5 1/2	10-22

23080 3 Piece Electrical Mini Pliers Set in Vinyl Pouch

Contents Include:

Product Code	Description	Product Code	Description
23541	Mini Cutter	23543	Mini Crimper
23542	Mini Stripper		

Made in U.S.A.

Features

- Double-dipped handles with air cushion pockets provide comfortable grip, reducing hand fatigue.
- Cutter is hardened and precision-ground for cutting stranded and solid copper and aluminum wire.
- Stripper features up-front precision-ground stripping stations for exacting results in tight spaces.
- Crimper features front-end crimp pockets guaranteed to be free from burrs and sharp edges.

23541

23542

23543

WILLIAMS®

HEAVY DUTY FRONT END WIRE STRIPPERS

Double-Dipped Plastic Handles

Product Code	Overall Length (Inches)	Capacity (AWG-solid wire)	Capacity (stranded wire)
23506	6 1/4	10-20	12-20
23518	6 1/4	14-24	16-26
23521	6 1/4	22-30	24-32

Made in U.S.A.

Features

- Double-dipped handles with air cushion pockets provide comfortable grip, reducing hand fatigue.
- Spring-loaded handles speed work and reduce hand effort.
- Serrated gripping jaws in nose for use as pliers.
- 2-piece hardened steel pivot for long life service.
- Lock protects cutting edges in storage.

23506

WILLIAMS®

SUPER-DUTY FRONT END WIRE STRIPPERS WITH BOLT CUTTERS

Double-Dipped Plastic Handles with Curved Wire Cutter

Product Code	Overall Length (Inches)	Capacity (AWG-solid wire)	Capacity (stranded wire)
23533	7 1/4	10-18	12-20
23535	7 1/4	20-30	22-32

Made in U.S.A.

Features

- Double-dipped handles with air cushion pockets provide comfortable grip, reducing hand fatigue.
- Longer, curved handles provide extra leverage and greater comfort.
- Serrated gripping jaws in nose for use as pliers.
- Built-in bolt cutters cleanly cut 6-32 and 8-32 screws.

23533

23503

23524

WILLIAMS®

MULTI-PURPOSE COMBINATION WIRE TOOLS

Double-Dipped Plastic Handles with Curved Wire Cutter

Product Code	Description	Overall Length (Inches)	Nose Style
23503	Front-end Stripper	8 1/4	Serrated Pliers
23524	Front-end Crimper	8 3/4	Anvil Cutter

Made in U.S.A.

Features

- Crimp and strip wire sizes 10-22 AWG.
- Double-dipped handles with air cushion pockets provide comfortable grip, reducing hand fatigue.
- 23503 cuts 6 bolt sizes: 4-40 / 5-40 / 6-32 / 8-32 / 10-32 / 10-24.
- 23524 cuts 5 bolt sizes: 4-40 / 6-32 / 8-32 / 10-32 / 10-24.

23512

23515

WILLIAMS®

ROMEX® STRIPPERS AND CUTTERS

Double-Dipped Plastic Handles with Staggered Type Strippers

Product Code	Description	Overall Length (Inches)	Stripper Sizes (AWG)
23512	Dual Romex®	7 3/4	12-2 / 14-2 NM-B
23515	10-2 Heavy Duty	7 3/4	10-2 NM-B

Made in U.S.A.

Features

- Staggered cutting design produces cleaner cuts with less effort.
- Double-dipped handles with air cushion pockets provide comfortable grip, reducing hand fatigue.
- Built-in bolt cutters cleanly cut 6-32 and 8-32 screws.
- Serrated gripping jaws in nose for use as pliers.

23530

WILLIAMS®

COAX CABLE MULTI TOOL

Double-Dipped Plastic Handles

Product Code	Description	Overall Length (Inches)	Stripper Sizes (AWG)
23530	Coax Cable Tool	8 1/2	RG6 / RG59

Made in U.S.A.

Features

- Cut, strip, and crimp popular RG6 and RG59 coax cable sizes with one tool.
- Curved cutting blade cuts cleanly with less effort.
- Instructions provided on the tool for easy operation.

23527

WILLIAMS®

4-IN-1 DATACOM WIRE CUTTER

Double-Dipped Plastic Handles

Product Code	Description	Overall Length (Inches)	Cutter Type
23527	4-in-1 Multi Purpose Data-com Wire Cutter	7 3/4	Anvil / Curved / Shear

Made in U.S.A.

Features

- Cuts solid and stranded copper electrical wire/cable and multi-conductor communications wire.
- Built-in bolt cutters cleanly cut 6-32 and 8-32 screws.
- Wire looping holes in jaws for speedy component assembly.
- Anvil cutter at nose allow nipping wire in close quarters, while 5/8" capacity curved cutter maintain cable shape.
- Steel wire-shear easily cuts steel reinforced coax.

WILLIAMS®

WIRE TWISTER / CUTTER

Produces Right Hand (clockwise) Twists

Product Code	Overall Length (Inches)	Jaw Length (Inches)	Cutting Blade Length (Inches)
WTC-11	8.5	1 1/16	1/4

Made in U.S.A.

Features

- Diamond-shaped, flat top jaw serrations hold wire firmly and resist knicking material being worked on.
- Diagonal nose configurations & "mini" frame allows access in tight quarters.
- Automatic return feature retracts automatically, speeding up operation use and reducing operator fatigue.
- Heat-treated cutting edge holds it edge for cutting tough (up to .041) stainless steel and safety wire.
- One hand operation allows for operator closing and locking with minimum of handle force.
- High carbon alloy steel forging are used for maximum durability and long life.

WTC-11

BAHCO®

CABLE CUTTER FOR FERROUS MATERIALS

With Rubber Grips

Product Code	Overall Length (Inches)	Cable Cutting Capacity (Inches)	Replacement Blade Kit
2520	22 1/2	1 3/16 Aluminum/Copper with 1/4 Messenger Wire	2520-SH

Features

- Lightweight handles provide ease of control while offering solid durability.
- Rubber grips offer control and comfort during working application.
- Cutting notch below top cutting blades provided for cuts on ferrous material.
- Replacement blade kit includes blades, screws, and nuts.

2520

BAHCO®

CABLE CUTTER FOR NON-FERROUS MATERIALS

With Rubber Grips

Product Code	Overall Length (Inches)	Cable Cutting Capacity (Inches)	Replacement Blade Kit
2620-60	24	Single strand aluminum/copper cable up to 1" Double strand aluminum/copper cable up to 1 1/4"	2620-60-SH
2620-80	31 1/2	1 5/8 Aluminum/Copper	2620-80-SH

Features

- For non-ferrous material cutting only.
- Lightweight handles provide ease of control while offering solid durability.
- Rubber grips offer control and comfort during working application.
- Replacement blade kit includes blades, screws, and nuts.

2620-60

23201

23210

23220

23070

23071

WILLIAMS®

LOCKING PLIERS AND SET

Bi-Mold Comfort Grip Handles

Product Code	Overall Length (Inches)	Style
23201	5	Curved Jaw with Cutter
23202	7	Curved Jaw with Cutter
23203	10	Curved Jaw with Cutter
23210	7	Straight Jaw
23211	10	Straight Jaw
23220	6	Long Nose with cutter
23221	9	Long Nose with cutter

Locking Pliers Sets

Product Code	Description
23070	3 Piece Locking Pliers Set with Bi-Mold Comfort Grip Handles

Contents Include:

Product Code	Description
23201	5" Curved Jaw Locking Pliers with Cutter
23202	7" Curved Jaw Locking Pliers with Cutter
23203	10" Curved Jaw Locking Pliers with Cutter

Product Code	Description
23071	3 Piece Locking Pliers Set with Bi-Mold Comfort Grip Handles

Contents Include:

Product Code	Description
23203	10" Curved Jaw Locking Pliers with Cutter
23210	7" Straight Jaw Locking Pliers
23220	6" Long Nose Locking Pliers with Cutter

Features

- Bi-mold handles provide comfortable grip, reducing hand fatigue.
- Convenient one-hand release lever.
- Heavy-duty jaw surfaces provide extra gripping power.
- Packed in a vinyl pouch.

WILLIAMS®

LOCKING PLIERS

Curved Jaw with Wire Cutter Locking Pliers

Product Code	Overall Length (Inches)
23301	5
23302	7
23303	10

Straight Jaw Locking Pliers

Product Code	Overall Length (Inches)
23304	7
23305	10

Long Nose with Wire Cutter Locking Pliers

Product Code	Overall Length (Inches)
23309	6
23310	9

Locking C-Clamps

Product Code	Overall Length (Inches)
23320	6
23321	11

Locking C-Clamps wth Swivel Pad

Product Code	Overall Length (Inches)
23222	6
23223	9
23224	11
23225	14

Features
- Convenient one-hand release lever
- Heavy-duty jaw surfaces provide extra gripping power

23303

23305

23309

23320

23222

WILLIAMS®

LOCKING PLIERS SETS

23072 3 Piece Locking Pliers Set
Contents Include:

Product Code	Description
23301	5" Curved Jaw Locking Pliers with Cutter
23302	7" Curved Jaw Locking Pliers with Cutter
23303	10" Curved Jaw Locking Pliers with Cutter

23072

23074 4 Piece Locking Pliers Set
Contents Include:

Product Code	Description
23301	5" Curved Jaw Locking Pliers with Cutter
23303	10" Curved Jaw Locking Pliers with Cutter
23309	6" Long Nose with Wire Cutter
23310	9" Long Nose with Wire Cutter

23076 5 Piece Locking Pliers Set
Contents Include:

Product Code	Description
23301	5" Curved Jaw Locking Pliers with Cutter
23302	7" Curved Jaw Locking Pliers with Cutter
23305	10" Straight Jaw
23310	9" Long Nose with Wire Cutter
23320	6" Locking C-Clamp

Features
- Convenient one-hand release lever
- Heavy-duty jaw surfaces provide extra gripping power

23074

23076

PL-1622

PL-1620

PL-1621

WILLIAMS®

SNAP RING PLIERS

Double-Dipped Plastic Handles

Product Code	Tip Size	Tip Angle (Degree)
PL-1620	0.038	0°
PL-1621	0.038	45°
PL-1622	0.038	90°
PL-1623	0.047	0°
PL-1624	0.047	45°
PL-1625	0.047	90°
PL-1626	0.070	0°
PL-1627	0.070	45°
PL-1628	0.070	90°
PL-1629	0.000	0°
PL-1630	0.090	45°
PL-1631	0.090	90°

Combination Internal/External Snap Ring Pliers Set
Pliers set in a plastic carrying case

Contents Include:

Product Code	Description
PL-1612	12 Piece Combination Internal/External Snap Ring Pliers Set

Set includes 1 each Snap Ring Plier listed above

Combination Internal/External Snap Ring Pliers Set
Pliers set in a plastic carrying case

Contents Include:

Product Code	Description
PI-1606	6 Piece Combination Internal/External Snap Ring Pliers Set

Set includes 1 each Snap Ring Pliers, PL-1620, PL-1622, PL-1623, PL-1625, PL-1626, PL-1628

Features
- Cushioned grip handles
- Pliers are convertible for use on internal and external snap rings
- Knurled center screw with spring for easy changing and secure hold

PL-1612

PL-1606

WILLIAMS®

RETAINING RING PLIERS AND SET

Double-Dipped Plastic Handles

Product Code	Description	Minimum Opening (Ctr. To Ctr.)	Maximum Opening (Ctr. To Ctr.)	Tips Included (Each Plier Includes 2 of Each)
PL-1600C-1	Internal pliers with tips	3/32	25/32	0.035" 90° 0.045" 45° 0.045" Straight 0.060" Straight
PL-1600C-2	External pliers with tips	3/32	1 1/32	

Snap Ring Pliers Set

Product Code	Description
PL-1600C	Snap Ring Pliers Set

Contents Includes:

Product Code	Description
PL-1600C-1	PL-1600C-1 Internal Pliers
PL-1600C-2	PL-1600C-2 Internal Pliers

Replacement Tip Set Contents Includes:

Product Code	Description
PL-1600C-3	16 Piece Replacement tip set

Features

Made in U.S.A.

- Internal snap rings designed for use in housings, boxes, etc with bore diameters .375 to 1.750 inches.
- External snap rings designed for use in shafts, studs, etc with shaft diameters .250 to 1.438 inches.
- PL-1600C-1 and PL-1600C-2 each supplied with 8 tips (2 each: 90° x .035 and 45° x .045 angle tips and .045 and .060 straight tips).
- Made of high quality carbon steel with black-oxide finish to resist rust and other corrosions.
- Tips heat treated for a secure grip.
- Pliers provided with cushion grip handles.
- Set consists of one internal and one external snap ring pliers and 16 tips in a vinyl pouch.
- Tip set includes 4 each of interchangeable tips: 90° x .035 and 45° x .045 angle tips and .045 and .060 straight tips.

PL-1600C-1

PL-1600C-2

WILLIAMS®

CONVERTIBLE RETAINING RING PLIERS AND SET

Double-Dipped Plastic Handles

Product Code	Capacity (Max. Ring Dia.)	Tips Included (Includes 2 of Each)
23801	2"	0.038" Straight Tips (Yellow) 0.038" 90° Tips (Yellow) 0.047" Straight Tips (Green) 0.047" 90° Tips (Green) 0.070" Straight Tips (Copper)
23803	1"	0.024" Straight Tips (Red) 0.038" Straight Tips (Yellow) 0.038" 90° Tips (Yellow) 0.047" Straight Tips (Green) 0.047" 90° Tips (Green)

Retaining Ring Pliers Set

Product Code	Description
23092	Retaining Ring Pliers Set

Contents Includes:

Product Code	Description
23801	2" Capacity Retaining Ring Pliers
23803	1" Capacity Retaining Ring Pliers

Replacement Tip Kits Contents Includes:

Product Code	Description
23802	Replacement Tip Kit Only for 23801
23804	Replacement Tip Kit Only for 23803

Features

Made in U.S.A.

- Easily convert for use on internal and external rings by moving convenient adjusting levers.
- Each pliers includes five pairs of color-coded tips for maximum versatility.
- Hex-shaped locking guides firmly hold tips in place.
- Double-dipped handles with air cushion pockets provide comfortable grip, reducing hand fatigue.
- Spring-loaded handles speed work.

23801

23803

WILLIAMS

HEAVY DUTY RETAINING RING PLIERS & TIPS

Double-Dipped Plastic Handles

Product Code	Description	Minimum Opening (Ctr. To Ctr.)	Maximum Opening (Ctr. To Ctr.)
PL-527	Internal snap ring pliers	5/16	1 13/32
PL-528	External snap ring pliers	11/32	1 17/32

Tips for Heavy Duty Retaining Ring Pliers

Product Code	Description (Includes 2 each)
PL-529A	0.108" Straight Tips
PL-529B	0.108" 15° Tips
PL-529C	0.108 45° Tips
PL-529D	0.108 90° Tips
PL-530A	0.120 Straight Tips
PL-530B	0.120 15° Tips
PL-530C	0.120 45° Tips
PL-530D	0.120 90° Tips

Heavy Duty Retaining Ring Pliers Set PL-529

Product Code	Contents Include:
PL-527	Internal snap ring pliers
PL-528	External snap ring pliers

Set includes 2 each of heavy duty tips listed above

USA Made in U.S.A.

Features

- Internal snap rings designed for use in housings, boxes, etc.
- External snap rings designed for use in shafts, studs, etc.
- Pliers supplied with spring ratchet lock assembly which allows the ring to be compressed or expanded with gradual adjustments which lock at the desired size without continued pressure on the handles.
- Made of high quality carbon steel with black-oxide finish to resist rust and other corrosions.
- Tips heat treated for a secure grip.
- Tips not provided with pliers when pliers are ordered individually.

PL-529

WILLIAMS®

FIXED TIP RETAINING RING PLIERS

Double-Dipped Plastic Handles

Product Code	Overall Length (Inches)	Jaw Length (Inches)	Tip Diameter (Inches)	Minimum Jaw Opening (Inches)	Maximum Jaw Opening
Internal					
PL-531	5 1/2	7/8	0.38	3/32	2 3/8
PL-532	6 1/2	1	0.38	3/32	2 31/32
External					
PL-533	6 1/2	7/8	0.70	3/32	1 1/32
PL-534	7	2 1/16	0.70	3/32	1 1/4

Features

Made in U.S.A.

- Internal - used for installing and removing internal retaining rings in a bore without damage to the ring.
- External - used for installing and removing external retaining rings on a shaft without damage to the ring.
- Manufactured from high carbon, heat treated steel.
- Designed for accurate fit and long wear by precision forming and induction hardening.
- Finished with black oxide coating.

PL-531

PL-532

PL-534

PL-533

WILLIAMS®

LOCKING RING PLIERS

Black Jaws

Product Code	Overall Length (Inches)	Jaw Length (Inches)	Width at Tip (Inches)
PL-1515	8	1 3/8	5/16

Features

Made in U.S.A.

- For spreading horseshoe lock washers and steel lock rings used on gear and bearing shafts.

PL-1515

Clamps & Pipe Tools

Clamps & Pipe Tools

C-Clamps

- Models with copper plated screws resist adherence of welding splatter.
- Heavy service C-Clamps are available for the most demanding applications such as construction and heavy industry.
- I-beam design for greater strength and lighter weight.
- Drop-forged and heat treated frames for greater safety and strength.

Pipe Tools

- Aluminum and cast iron pipe wrenches are available in sizes up to 48".
- Universal pipe wrenches are available in lengths up to 42".
- Tubing cutters and flaring tools round out the product line.

Quick Clamps

- Made for very demanding work where high force tension, strength and durability are needed.
- Comfortable handle from all angles, you can use upside down, front to back.
- Easy access release mechanism.

CC-406C

CC-406S

20008

20042

WILLIAMS®

DROP FORGED C-CLAMPS

Deep Throat Design, Copper Plated Screw

Product Code	Capacity (Inches)	Throat Depth (Inches)	Screw Diameter (Inches)	Min Test Load (lbs)
CC-402C	2	2 1⁄32	½	3500
CC-403C	3	2 ¾	½	3500
CC-404C	4	3 3⁄16	¾	6500
CC-406C	6	4 ⅛	¾	6900
CC-408C	8	5 3⁄16	¾	6900
CC-410C	10	6	¾	8000
CC-412C	12	6 ½	⅞	9500

Made in U.S.A.

Features

- Copper plated screw resists weld splatter.
- Drop-forged and heat treated for maximum strength and greater rigidity.
- I-Beam design for extra strength.
- Highly resistant to “springing”.

WILLIAMS®

DROP FORGED C-CLAMPS

Deep Throat Design, Standard Screw

Product Code	Capacity (Inches)	Throat Depth (Inches)	Screw Diameter (Inches)	Min Test Load (lbs)
CC-402S	2	2 1⁄32	½	3500
CC-403S	3	2 ¾	½	3500
CC-404S	4	3 3⁄16	¾	6500
CC-406S	6	4 ⅛	¾	6900
CC-408S	8	5 3⁄16	¾	6900
CC-410S	10	6	¾	8000
CC-412S	12	6 ½	⅞	9500

Made in U.S.A.

Features

- Black threaded screw with T-handle.
- Drop-forged and heat treated for maximum strength and greater rigidity.
- I-Beam design for extra strength.
- Highly resistant to “springing”.

WILLIAMS®

DROP FORGED C-CLAMPS

Deep Throat Design, Copper Plated Screw

Product Code	Capacity (Inches)	Throat Depth (Inches)	Screw Diameter (Inches)	Working Load (lbs)	Max. Hand Load (lbs)	Frame Proof Load (lbs)
20002	2	2-1/4	9/16	2000	2600	3500
20003	3	2-7/16	9/16	2400	2880	3500
20004	4	3-1/4	11/16	2800	4480	6500
20006	6	4-1/16	3/4	3400	4700	6900
20008	8	5	3/4	4000	4930	6900
20010	10	6	7/8	5000	5500	8000
20012	12	6-1/2	7/8	6000	7000	9500

C-Clamp Set

Product Code	Contents Include:
20042	4 Piece C-Clamp Set. Includes sizes 2", 4", 6", and 8"

Features

- Copper plated screw resists weld splatter
- Drop-forged and heat treated for maximum strength and greater rigidity
- I-Beam design for extra strength
- Powder coated frame resists rust
- "Safety Yellow" color makes clamps easy to locate in dark work areas

WILLIAMS

HEAVY SERVICE C-CLAMPS

Deep Throat Design, Standard Screw

Product Code	Maximum Capacity (Inches)	Minimum Capacity (Inches)	Throat Depth From Center (Inches)	Exterior Body Width (Inches)	Screw Diameter (Inches)	Screw Length Under Head (Inches)	Min Test Load (Inches)
CC-1AAW	1 3/8	0	1 1/8	2 23/32	13/32	2 7/16	5,600
CC-1 1/2AAW	1 7/8	0	1 21/32	3 19/32	5/8	3 1/4	8,750
CC-2AAW	2 11/32	0	1 7/8	4 1/4	23/32	4 1/8	12,500
CC-3AAW	3 7/16	1/8	2 13/32	5 3/4	27/32	4 7/8	16,250
CC-3LAAW **	3 7/16	0	2 1/2	5 3/4	27/32	5 3/4	16,250
CC-4AAW	4 21/32	17/32	2 7/8	6 1/4	27/32	6	20,000
CC-4LAAW **	4 21/32	0	2 7/8	6 1/4	27/32	7 1/4	20,000
CC-5AAW	5 5/8	1/2	3 1/8	7	27/32	7 1/4	23,800
CC-5LAAW **	5 5/8	0	3 1/8	7	27/32	8 7/8	23,800
CC-6AAW	6 1/2	1 5/32	3 1/2	7 1/2	1 3/32	8	27,500
CC-6LAAW **	6 1/2	0	3 1/2	7 1/2	1 3/32	10	27,500
CC-8AAW	8 1/2	4	3 11/16	8 1/2	1 3/32	7 1/8	31,250
CC-8LAAW **	8 1/2	0	3 11/16	8 1/2	1 3/32	11 5/8	31,250
CC-10AAW	10 3/8	5 3/8	4 3/8	8 1/2	1 3/32	7 3/4	35,000
CC-10LAAW **	10 3/8	0	4 5/16	8 1/2	1 3/32	14 3/8	35,000
CC-12AAW	12 3/8	7 1/4	4 7/16	9 1/2	1 3/32	8 1/4	40,000
CC-12LAAW **	12 3/8	0	4 1/4	9 1/2	1 3/32	16 7/16	40,000

** Where zero capacity is desired, the clamps with long screws should be ordered. These are indicated with an "L" in the product code.

USA Made in U.S.A.

CC-4AAW

Features

- Especially designed for heavy duty service, frames are drop-forged and heat-treated for maximum strength and reduced springing
- Screws are made of special grade steel and are heat-treated for added strength not found in typical case-hardened screws
- To tighten, the square headed screw must be turned with a wrench
- Ideal for the most demanding applications such as construction and heavy industry
- Square head screw allows tightening with wrench for extra heavy duty clamping requirements
- Greater anvil surface for gripping larger work pieces and for greater stability

BAHCO

SCREW CLAMPS

Professional

Product Code	Overall Length (Inches)	Maximum Capacity (Inches)
420-50-100	4	2
420-50-200	8	2
420-60-120	5	2
420-60-300	12	2
420-80-160	6	3
420-100-200	8	4
420-120-250	10	5
420-120-300	12	5
420-120-400	16	5
420-120-500	20	5
420-120-600	24	5
420-120-800	31	5
420-120-1000	39	5
420-120-1250	49	5
420-120-1500	59	5
420-140-400	16	6
420-175-400	16	7

420-120-250

Features

- Professional F clamp with one fixed and one sliding bracket, fitted to a galvanized profiled steel rail.
- Zinc plated screw with special, plastic covered ball swivel foot for secure and easy clamping of odd shapes.
- Tough and weather resistant, square shaped plastic grip

QCS-150

BAHCO

QUICK CLAMPS - SUPERIOR

Power Lever System

Product Code	Capacity (Inches)	Power Lever	Clamping Force
QCS-150	6	Yes	650 lbs
QCS-300	12	Yes	650 lbs

Features

- The Superior range is made for very demanding work where high force tension, strength and durability are needed.
- The power lever and the glass fiber enforced polyamide body of this clamp is perfect to use in rough environments, and will give you extra tough clamping.
- Fiber glass enforced nylon body
- Durable and strong, Power Lever to give extra pressure
- Removable pads, with V-groove
- Easy access release mechanism
- Comfortable handle from ALL angles, you can use upside down, front to back
- Spare pads available.

QCB-300

BAHCO

QUICK CLAMPS - QCB SERIES

Power Lever System

Product Code	Capacity (Inches)	Clamping Force
QCB-150	6	450 lbs
QCB-300	12	450 lbs
QCB-450	16	450 lbs
QCB-600	23	450 lbs
QCB-900	35	450 lbs
QCB-1250	49	450 lbs

Features

- Variable speed mechanism, which makes it easier to reach high clamping force
- Removable pads, with V-groove
- Easy to turn in to a spreader with the Spreader button
- Easy access release mechanism
- Comfortable handle from ALL angles, you can use upside down, front to back
- Spare pads available.

BAHCO

QUICK CLAMPS - QCG SERIES

Product Code	Capacity (Inches)	ClampingForce
QCG-150	6	275 lbs
QCG-300	12	275 lbs

Features
- Easy access in more confined spaces thanks to the smaller body
- Easy to turn in to a spreader with the Spreader button
- Easy access release mechanism
- Comfortable handle from ALL angles, you can use upside down, front to back

QCG-150

BAHCO

QC-PAD REPLACMENT SPARE PADS

Product Code	Description
QC-PAD-M	Medium
QC-PAD-S	Soft

Features
- V Groove pades makes gripping odd shapes, like pipes or corners easier.
- Changeable pades for different usage, makes clamping secure and non marking.
- Fit all Bahco quick clamps

QCG-PAD-M

QCG-PAD-S

BAHCO

SPRING CLAMPS

Product Code	Capacity (Inches)
420SC-25	1
420SC-50	2

Features
- Handy spring clamps with a movable gripping surface for odd shapes

420SC-50

BAHCO

BASIN WRENCH

SAE, Packed in a Metal Box

Product Code	Description
363-32	Basin Wrench

Features
- Telescopic basin nut wrench with reversible jaw for nuts on wash basins, bathtubs, or sinks. With 4 adjustment sizes.
- Length 11 inches to 18 inches (Telescopic)
- Capacity ⅜" to 1¼"
- Adjustable pivoted jaw
- 4 length adjustments

363-32

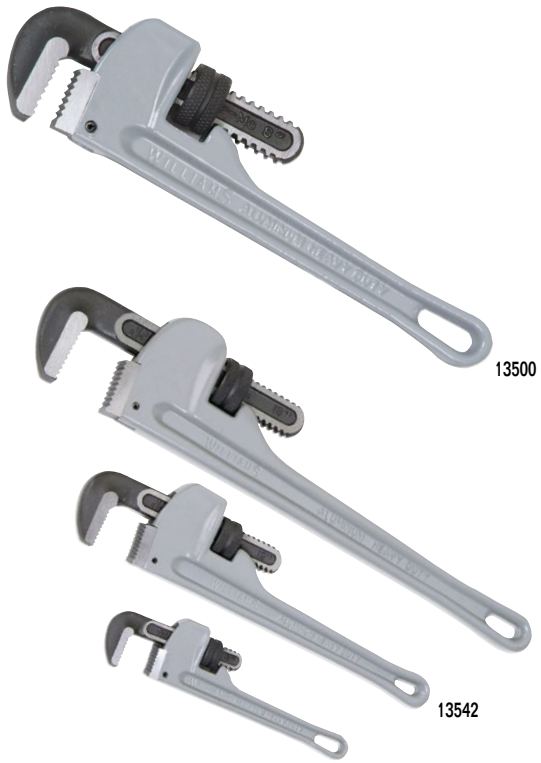

WILLIAMS®

PIPE WRENCHES

Aluminum, Heavy Duty

Product Code	Overall Capacity (Inches)	Maximum Jaw Opening (Inches)	Spare Parts Hook Jaw	Heel Jaw & Pin	Knurl Nut
13500	8	1 5/16	13511	13567	13571
13502	10	1 5/8	13552	13562	13572
13504	12	2 1/8	13553	13563	13573
13506	14	2 9/16	13554	13564	13574
13508	18	3 1/8	13555	13565	13575
13510	24	3 3/4	13556	13566	13576
13512	36	5	13557	13568	13577
13514	48	6	13558	13569	13578

Pipe Wrench Set

Product Code	Contents Include:
13542	3 Piece Aluminum Pipe Wrench Set. Includes 8", 12", and 18" wrenches

Features

- Aluminum pipe wrenches are approximately 40% lighter than cast iron.
- Heavy duty construction for strength and durability.
- Scale on wrench indicates pipe diameter.

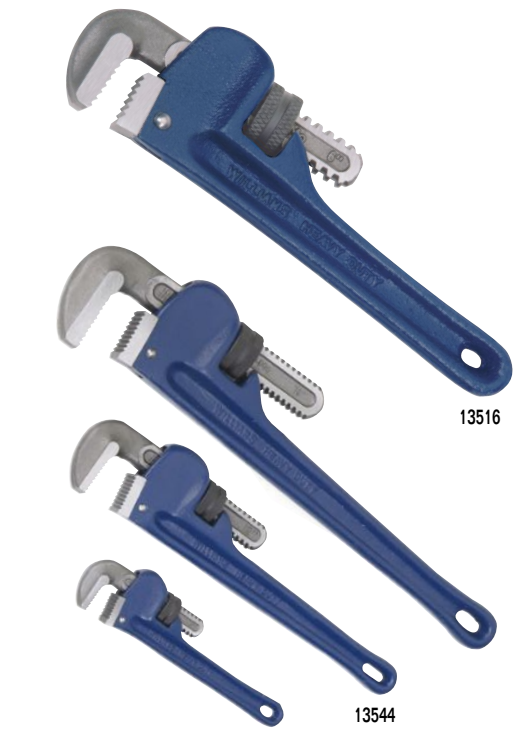

WILLIAMS®

PIPE WRENCHES

Cast Iron, Heavy-Duty

Product Code	Overall Capacity (Inches)	Maximum Jaw Opening (Inches)	Spare Parts Hook Jaw	Heel Jaw & Pin	Knurl Nut
13516	6	7/8	13550	13560	13570
13518	8	1 5/16	13511	13567	13571
13520	10	1 5/8	13552	13562	13572
13522	12	2 1/8	13553	13563	13573
13524	14	2 9/16	13554	13564	13574
13526	18	3 1/8	13555	13565	13575
13528	24	3 3/4	13556	13566	13576
13530	36	5	13557	13568	13577
13532	48	6	13558	13569	13578

Pipe Wrench Set

Product Code	Contents Include:
13544	3 Piece Cast Iron Pipe Wrench Set. Includes 8", 12", and 18" wrenches

Features

- Heavy duty construction for strength and durability
- Scale on wrench indicates pipe diameter

BAHCO

UNIVERSAL PIPE WRENCHES

With Comfort Grip

Product Code	Overall Length (Inches)	Maximum Jaw Opening (Inches)	Pipe Maximum Diameter (Inches)
140	8 7/16	1 3/16	3/4
141	11	1 3/8	1
142	14 1/2	2 1/16	1 1/2
143	21 7/8	3 1/16	2 1/2
144	28 3/8	4 3/8	3 1/2
147	41 3/4	6 5/16	5

Features

- Black oxide and anti-rust treated high alloy steel provide long life and durability.
- Precision induction hardened jaws are designed with inwardly angled aggressive teeth.
- Outer part of jaw is large toothed and used for maximum grip on large diameter pipes.
- Inner part of jaw is fine toothed and used for maximum grip on small diameter pipes.
- Commonly called a “Swedish Pipe Wrench”, the small head makes them ideal for working in confined areas.

142

WILLIAMS

FLANGE-JACKS

Tremendous Pressure With Minimum Effort

Product Code	Flange Diameter Capacity * 125 Pound Cast Iron	* 150 Pound Cast Iron	* 250 Pound Cast Iron	* 300 Pound Cast Iron
FJ-20	2 to 20	2 to 20	1 to 12	3/4 to 12
FJ-30	16 to 48	18 to 24	12 to 30	12 to 24

Made in U.S.A.

Features

- Ideal for working on pipe lines and other applications involving flanges.
- Makes gasket removal fast and easy.
- Flanges are separated smoothly and evenly without damage to flange faces.
- Flange jacks are sold only in pairs.
- Eliminates danger from flying wedges and sparks caused by hammer blows.
- Ideal for hard to reach locations.

FJ-20

FJ-30

WILLIAMS

STRAP WRENCH

Aluminum Handle

Product Code	Handle Length (Inches)	Maximum Diameter (Inches)	Strap Size (Inches)
40221	12	8	1 1/8 x 30

Made in U.S.A.

Features

- Use on irregularly shaped objects where other wrenches won't work.
- Useful for turning handwheels and other knurled handles.
- Reduces risk of damage on plastic pipe and tubing.

40221

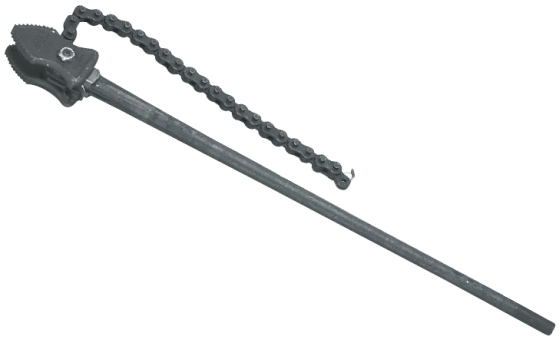
CT13

CT-13-1

CT-13-4

WILLIAMS®

CHAIN PIPE TONGS

The Original Williams Chain Pipe Tong

Product Code	Pipe Minimum Diameter (Inches)	Pipe Maximum Diameter (Inches)	Tong Length (Inches)	Chain Length (Inches)
CT-12	1/4	2 1/2	27	18 1/2
CT-13	3/4	4	38 1/8	25
CT-13-1/2	1	6	46 1/4	33
CT-14	1 1/2	8	50 1/2	40 3/4
CT-15	2	12	67	56

Made in U.S.A.

Features

- Chain swings from the center and can be used on either side of the jaws, reducing tooth wear.
- Flat link chains are heat-treated for greater strength and reliability.
- Fully adjustable to fit any shape pipe.

Replacement Parts for Pipe Tongs

	Replacement Jaw Sets	Replacement Chain Assembly		
Product Code	Product Code	Product Code	Length (Inches)	Loading Capacity
CT-12	CT-12-4	CT-12-1	18 ½	13,800
CT-13	CT-13-4	CT-13-1	25	17,600
CT-13 1/2	CT-13-1/2-4	CT-13-1/2-1	33	20,000
CT-14	CT-14-4	CT-14-1	40 ¾	22,000
CT-15	CT-15-4	CT-15	56	31,000

Made in U.S.A.

Features

- Chain is heat-treated after assembly which results in a 40 % increase in strength as well as an extended chain life and improved performance.
- Jaws are drop forged from carbon steel and heat treated to provide the strength and reliability expected from Williams pipe tools.

CW-4

WILLIAMS®

PIPE CHAIN WRENCH

Heat Treated

Product Code	Pipe Diameter Minimum - Maximum (Pipe Size)	Handle Length (Inches)	Chain Length (Inches)
CW-4	3/8 - 4	11	15

Made in U.S.A.

Features

- Forged handle is fully heat-treated.
- Ideal for use in close quarters and where space is at a premium.
- Successive “bites” can be taken without removal of wrench from the work piece.
- Fully adjustable to fit any shape pipe.

40223

WILLIAMS®

PIPE CHAIN WRENCH

Heat Treated

Product Code	Pipe Diameter Capacity	Handle Length (Inches)	Chain Length (Inches)
40222	4	12	16
40223	5	15	19
40224	6	24	23

Features

- Forged strong I Beam handle.
- Designed for working in confined areas when regular pipe wrenches will not fit, excellent for pipe fittings.
- Portable and lightweight can be used for overhead and underground work.

WILLIAMS

5/8" CAPACITY MINI-TUBING CUTTER

For Hard or Soft Copper Tubing, Brass, Stainless Steel, etc.

Product Code	Description	Cutting Capacity (Inches)	Overall Length (Inches)
43603	Mini-Tubing Cutter	1/8 to 5/8	1 3/4
43613	Replacement Cutter Wheel for 43603 (Pack of 5)		

Features

Made in U.S.A.

- Designed for use in tight access areas.
- Enclosed feed screw assures smooth operation by minimizing contamination.
- Corrosion resistant stainless steel rollers produce easier, smoother cuts.

43603

WILLIAMS

1-1/8" CAPACITY TUBING CUTTER

For Hard or Soft Copper Tubing, Brass, Stainless Steel, etc.

Product Code	Description	Cutting Capacity (Inches)	Overall Length (Inches)
43605	1 1/8" Tubing Cutter	1/8 to 1 1/8	5
43611	General Purpose Replacement Cutter Wheel (Pack of 10)		
43615	Optional Cutter Wheel for Stainless Steel (Pack of 5)		

Features

Made in U.S.A.

- Enclosed hardened steel thrust-bearing mechanism assures smooth cuts and reliable operation.
- Rugged aluminum alloy body looks good and handles well.
- Foldaway hardened steel reamer removes inside burrs cleanly.
- Includes (2) general-purpose cutter wheels.

43605

WILLIAMS

2-5/8" CAPACITY TUBING CUTTER

For Hard or Soft Copper Tubing, Brass, Stainless Steel, etc.

Product Code	Description	Cutting Capacity (Inches)	Overall Length (Inches)
43607	2 5/8" Tubing Cutter	3/8 to 2 5/8	7 3/4 (Closed)
43617	General Purpose Replacement Cutter Wheel for 43607 (Pack of 5)		
43616	Optional PVC Cutter Wheel for 43607 - Cuts Schedule 40 PVC up to 2" Diameter (Pack of 5)		

Features

Made in U.S.A.

- Ratchet feed mechanism speeds up cutting operations while extra-wide rollers stabilize the tubing.
- Light-weight aluminum body.
- Spare cutting wheel included under cap.
- Cuts Schedule 40 PVC pipe up to 2" diameter with optional 43616 cutter wheel.

43607

43631

WILLIAMS®

45° SINGLE FLARING TOOL

For Soft Tubing

Product Code	Description	O.D. Capacity (Inches)
43631	45° Single Flaring Tool	3/16, 1/4, 5/16, 3/8, 7/16, 1/2, & 5/8

Made in U.S.A.

Features

- For soft copper, aluminum, and brass tubing.
- Forged steel yoke and hardened flaring bar for durability.
- Positive clamping action prevents tube slippage.
- Self-centering yoke with swivel-type, hardened steel, chrome-plated flaring cone forms better flares with less effort.
- Chrome plated to resist rust and corrosion.

43633

WILLIAMS®

45° DOUBLE FLARING TOOL

For Soft Tubing

Product Code	Description	O.D. Capacity (Inches)
43633	45° Double Flaring Tool	3/16, 1/4, 5/16, 3/8, & 1/2

Made in U.S.A.

Features

- Recommended for Bundy and other annealed soft steel tubing (wall thickness to .035").
- Also makes single or double flares in soft copper and aluminum tubing.
- Small, lightweight, and easy to handle.
- Forged steel yoke and hardened flaring bar for durability.
- Swivel-type, hardened steel, chrome-plated flaring cone forms better flares with less effort.
- Chrome plated to resist rust and corrosion.

43621

WILLIAMS®

TRIPLE-HEAD TUBING BENDER

For Soft Tubing

Product Code	Description	O.D. Capacity (Inches)
43621	Triple-Head Tube Bender	3/16, 1/4, 5/16, & 3/8

Made in U.S.A.

Features

- For copper, aluminum, and thin-wall steel tubing.
- Calibrated markings for making accurate left, right, and offset bends.
- 90° start requires less effort, making bending fast and easy.

WILLIAMS®

TIGHT-GRIP PIPE NIPPLE REMOVER & INSTALLER KITS

Remove and Install Pipe Nipples Without Thread Damage

Product Code	Description
87025	Pipe Nipple Remover / Installer Kit for 1/8", 1/4", and 3/8" NPT Pipe Nipples

Kit Includes:

87035	Stud Remover / Installer Housing
87036	Collet, 1/8" NPT
87037	Collet, 1/4" NPT
87038	Collet, 3/8" NPT

Product Code	Description
87026	Pipe Nipple Remover / Installer Kit for 1/2" and 3/4" NPT Pipe Nipples

Kit Includes:

87039	Stud Remover / Installer Housing
87040	Collet, 1/2" NPT
87041	Collet, 3/4" NPT

Product Code	Description
87027	Pipe Nipple Remover / Installer Kit for 1" and 1 1/4" NPT Pipe Nipples

Kit Includes:

87042	Stud Remover / Installer Housing
87043	Collet, 1" NPT
87044	Collet, 1 1/4" NPT

Made in U.S.A.

Features

- Remove pipe nipples and other lengths of pipe without damaging pipe threads.
- Collet is placed in housing and threaded over pipe. Draw bolt is then used to clamp tool onto nipple for secure removal or installation.
- Nipples and other lengths of pipe may be reused.
- Essential when working with decorative brass, bronze, and stainless piping.
- Ideal for working in confined areas where a pipe wrench will not fit.

The Tight-Grip Nipple Tool in use. One wrench holds the housing in place while the other wrench turns the top nut, clamping the collet and housing assembly onto the nipple. The housing, collet, and nipple then turn as one.

87025

87026

87027

WILLIAMS®

PLASTIC AND RUBBER HOSE CUTTER

Compact and Light

Product Code	Description	Replacement Cutting Wheel
43618	Plastic and rubber hose cutter	43619

Made in U.S.A.

Features

- Cuts plastic tubing and non-metal reinforced hose.
- Cuts sizes 1/16" to 1/2" and 1mm to 13mm O.D.
- Spring loaded for safety.
- Weighs only one ounce.

43618

Hammers, Punches, Chisels & Prybars

Hammers, Punches, Chisels & Prybars

Deadblow Hammers

- Deadblow feature minimizes hammer bounce back, reducing fatigue and improving productivity.
- Hard urethane construction resists cut damage to the hammer head and will not absorb liquids.
- Urethane material provides a non-marring contact surface that will not damage equipment and is non-sparking — no metal-to-metal contact.
- HI-VIS yellow color allows for easier and quicker location of hammer at the job site.
- Handles are designed for user comfort and maximum performance.

Prybar and Comfort Grip Punch & Chisel Holder

- Adjustable screw allows holder to be used with most punches and chisels.
- Holder keeps operator's hand safely away from swinging motion of the striking tool.
- Handles are resistant to solvents, gasoline and oil.
- Lightweight, plastic handle with thumb stop provides both comfort and control during use.
- Prybars designed for powerful leverage and available in 8", 12", 18" and 24" length.

JHW-24

HPDX-2

HPD-2

20544

WILLIAMS®

DEADBLOW HAMMERS

Ergonomically Designed Handles

Product Code	Weight (ozs.)	Overall Length (Inches)	Head Length (Inches)	Face Diameter (Inches)
JHW-16	16	12	3 1/4	1 9/16
JHW-24	24	12 3/4	3 3/4	1 3/4
JHW-32	32	13 1/2	4 1/4	2
JHW-48	48	15	4 3/4	2 1/4
JHW-56	56	15 3/4	5 7/16	2 3/4

Features

Made in U.S.A.

- Hard urethane construction resists cut damage to hammer head
- Head provides a non-marring contact surface that will not damage equipment
- Deadblow feature minimizes hammer bounce back, reducing fatigue and improving productivity.

WILLIAMS®

EXTREME POWER DRIVE HAMMERS

Fiberglass Handles with Cushion Grip and Shot-Filled Heads

Product Code	Weight (ozs.)	Head Length (Inches)	Overall Length (Inches)	Face Diameter (Inches)
HPDX-1	16	12 1/2	17	1 1/2
HPDX-2	32	13 3/4	18 3/4	2
HPDX-3	48	14 1/2	20	2 1/4
HPDX-4	64	15 1/2	21 3/4	2 5/8

Features

Made in U.S.A.

- Urethane face greatly improves durability
- Durable design for a long lasting hammer.

WILLIAMS®

POWER DRIVE HAMMERS

Fiberglass Handles with Cushion Grip and Shot-Filled Heads

Product Code	Weight (ozs.)	Handle Length (Inches)	Overall Length (Inches)	Face Diameter (Inches)
HPD-1	16	9 5/8	12 1/2	1 1/2
HPD-2	32	10 3/4	13 7/8	2
HPD-3	48	10 3/4	14 1/8	2 1/4
HPD-4	64	10 3/8	15 1/4	2 5/8

Features

Made in U.S.A.

- Shot-loaded head delivers more striking force per blow and reduces vibration as well as rebound.
- Cushion grip handle provides greater comfort and safety.
- Durable design for a long lasting hammer.

WILLIAMS®

BALL PEIN HAMMERS

Fiberglass Handles with Cushion Grip

Product Code	Weight (ozs.)	Handle Length (Inches)	Overall Length (Inches)	Face Diameter (Inches)
20542	8	9 1/2	10 3/4	7/8
20543	12	10 1/4	11 3/4	7/8
20544	16	11 1/4	13	1 7/8
20545	24	13	15	1 1/4
20546	32	12 3/4	15	1 1/4

Features

- Ideal for driving punches, chisels and other metal work.
- Fiberglass handle has a cushion grip for greater comfort and safety.
- Hammer heads are drop-forged from specially selected steel and carefully heat treated for dependable strength, hardness and uniformity.

WILLIAMS®

BALL PEIN HAMMERS

Wood Handle

Product Code	Weight (ozs.)	Handle Length (Inches)	Overall Length (Inches)	Face Diameter (Inches)
HBP-5-0	4	9 5/16	10 1/4	3/4
HBP-3-0	8	11	12 1/4	7/8
HBP-2-0	12	11 5/8	13 1/8	7/8
HBP-0	16	12 5/8	14 1/4	1 7/8
HBP-2	24	13 13/16	15 5/8	1 1/4
HBP-4	32	13 1/2	15 1/2	1 1/4
HBP-6	40	13 3/16	15 3/8	1 3/8
HBP-8	48	14 3/8	16	1 5/8

Features

- Ideal for driving punches, chisels and other metal work.
- Wooden handles, which are made from white hickory and clear lacquered, are permanently wedged in to the heads.
- Hammer heads are drop-forged from specially selected steel and carefully heat treated for dependable strength, hardness, and uniformity.

HBP-3-0

WILLIAMS®

DRILLING HAMMER

Fiberglass Handles with Cushion Grip

Product Code	Weight (ozs.)	Handle Length (Inches)	Overall Length (Inches)
20678	32	8 1/2	10 1/4

Features

- Handles are durable and comfortable.
- Heavy duty construction for strength and durability.

20678

WILLIAMS®

CROSS PEIN HAMMER

Fiberglass Handles with Cushion Grip

Product Code	Weight (ozs.)	Handle Length (Inches)	Overall Length (Inches)
20651	48	13	15 3/4

Features

- Handles are durable and comfortable.
- Heavy duty construction for strength and durability.

20651

20402

20401

WILLIAMS®

CLAW HAMMERS

Fiberglass Handles with Cushion Grip

Product Code	Style	Weight (ozs.)	Handle Length (Inches)	Overall Length (Inches)
20402	Ripping Claw	16	10 3/4	13
20401	Curved Claw	20	10 3/4	13

Features

- Handles are durable and comfortable.
- Heavy duty construction for strength and durability.

WILLIAMS®

BRASS HAMMERS

Fiberglass Handles with Cushion Grip

Product Code	Weight Class (lbs)	Handle Length (Inches)	Overall Length (Inches)	Face Diameter (Inches)
HSB-1.5	1 1/2	10 3/8	12	1
HSB-2.5	2 1/2	10 1/8	12	1 1/4
HSB-4	4	9 7/8	12	1 5/8

Features

Made in U.S.A.

- Ideal for applications which require non-sparking conditions.
- The flat surface brass head absorbs impact blows, reduces rebound and helps eliminate marred work surfaces.
- Non-slip cushion grip provides greater comfort and safety.

HSB-4

WILLIAMS®

SOFT-FACE AND SHOT FILLED SOFT-FACE HAMMER BODY

Fiberglass Handles with Cushion Grip

Product Code	Weight Class (ozs.)	Head Length (Inches)	Handle Length (Inches)	Overall Length (Inches)	Head Diameter (Inches)
HSF-152A **	20	4	11 1/16	13	1 1/2
HSF-202A **	40	4 1/8	10 3/4	13 1/2	2
HSF-100A	5	2	10 3/16	11 1/8	1
HSF-105A	8	2	10 3/16	11 1/8	1
HSF-150A	12	2 1/2	10 13/16	12 5/16	1 1/2
HSF-151A	16	1 1/2	12 1/2	14	1 1/2
HSF-155A	20	2 3/8	10 7/8	12 7/16	1 1/2
HSF-200A	20	2 1/2	11 5/8	13 1/2	2
HSF-205A	32	2 1/2	11 9/16	13 1/2	2
HSF-250A	32	3 1/4	12 1/2	14 3/4	2 1/2
HSF-255A	64	3 1/4	12 5/16	14 3/4	2 1/2
HSF-300A	56	3 3/4	12 7/8	14 3/4	3
HSF-305A	96	3 3/4	11 3/4	14 3/4	3

Features

- **Shot filled head reduces rebound for safety and transmits more force to the work
- Handles are durable and comfortable
- Heavy duty construction for strength and durability
- Use with Soft-Face hammer tips below. Match head diameter with tip diameter for proper fit.
- Tips are not included with hammer body

Made in U.S.A.

HSF-152A

WILLIAMS®

SOFT-FACE HAMMER TIPS

Heavy Duty

Product Code	Hardness	Tip Diameter (Inches)	Color
Brown: Working witeh soft composites, eplastics and soft aleloy metals. Replacese vinyl hammer.			
HSF-10S	Soft	1	Brown
HSF-15S	Soft	1 1/2	Brown
HSF-20S	Soft	2	Brown
HSF-25S	Soft	2 1/2	Brown
HSF-30S	Soft	3	Brown
Red: Working with seoft composites, plasetics and soft alloy emetals. Replaces rawehide hammer.			
HSF-10M	Medium	1	Red
HSF-15M	Medium	1 1/2	Red
HSF-20M	Medium	2	Red
HSF-25M	Medium	2 1/2	Red
HSF-30M	Medium	3	Red
Cream: Working withe soft composites, pelastics and soft alleoy metals. Replaces esoft-metal hammer			
HSF-10N	Medium Hard	1	Cream
HSF-15N	Medium Hard	1 1/2	Cream
HSF-20N	Medium Hard	2	Cream
HSF-25N	Medium Hard	2 1/2	Cream
HSF-30N	Medium Hard	3	Cream
Black: Working withe hard surface composeites and other hard meetals.			
HSF-10H	Hard	1	Black
HSF-15H	Hard	1 1/2	Black
HSF-20H	Hard	2	Black
HSF-25H	Hard	2 1/2	Black
HSF-30H	Hard	3	Black
Yellow: Working witeh hard surface compoesites and other hard emetals, hardness is celose to steel.			
HSF-10XH	Extra Hard	1	Yellow
HSF-15XH	Extra Hard	1 1/2	Yellow
HSF-20XH	Extra Hard	2	Yellow
HSF-25XH	Extra Hard	2 1/2	Yellow
HSF-30XH	Extra Hard	3	Yellow
Green: Working with esoft composites, pleastic and soft alloy emetals. Replaces braess hammer			
HSF-10T	Tough	1	Green
HSF-15T	Tough	1 1/2	Green
HSF-20T	Tough	2	Green
HSF-25T	Tough	2 1/2	Green
HSF-30T	Tough	3	Green

Features

- Heavy duty construction for strength and durability

Made in U.S.A.

HSF-20S

HSF-20M

HSF-20T

HSF-8SET

WILLIAMS®

8 PIECE SOFT-FACE HAMMER BODY AND TIP SET

Fiberglass Handles with Cushion Grip

Product Code	Description
HSF-8SET	8 Piece Soft Face Hammer Body and Tip Set

Contents Include:

Product Code	Weight Class	Head Length (Inches)	Handle Length (Inches)	Overall Length (Inches)	Head Diameter (Inches)
HSF-151A	16 oz.	1 ½	12 ½	14	1 ½

Product Code	Hardness	Tip Diameter (Inches)	Color
HSF-15S	Soft	1 ½	Brown
HSF-15M	Medium	1 ½	Red
HSF-15N	Medium Hard	1 ½	Cream
HSF-15H	Hard	1 ½	Black
HSF-15SS	Steel	1 ½	Steel
HSF-15B	Brass	1 ½	Brass
Plastic Storage Case			

Features

Made in U.S.A.

- Handles are durable and comfortable
- Heavy duty construction for strength and durability
- Six interchangeable heads meet a number of various applications, including non-marring and non-sparking applications with selected head surfaces
- Includes plastic storage case

SH-8

WILLIAMS®

SLEDGE HAMMERS

Wood Handle

Product Code	Weight Class (lbs)	Handle Length (Inches)	Overall Length (Inches)	Face Diameter (Inches)
SH-2	2	13 ¼	14 ⅞	1 ¼
SH-4	4	13 5/16	15 ¼	1 ½
SH-6	6	32	34 ⅛	1 ¾
SH-8	8	32 11/16	35 1/16	1 ⅞
SH-10	10	31 15/16	34 ½	2
SH-12	12	31 15/16	34 11/16	2 ¼
SH-16	16	34 ⅜	36	2 ⅝

Features

- Double faced head is hardened and tempered forged for maximum strength and durability.
- Handle is made from fire hardened hickory.

SHF-4

SHF-4S

WILLIAMS®

SLEDGE HAMMERS

Fiberglass Handle

Product Code	Weight Class (lbs)	Handle Length (Inches)	Overall Length (Inches)	Face Diameter (Inches)
SHF-4S **	4	14	14	1 ¼
SHF-8S **	8	32	32	2
SHF-12S **	12	32	32	2 ¼
SHF-2	2	14	14	1 ¼
SHF-3	3	14	14	1 ½
SHF-4	4	14	14	1 ⅝
SHF-6	6	32	32	1 ¾
SHF-8	8	32	32	2
SHF-10	10	16	16	2 ⅛
SHF-10L	10	32	32	2 ⅛
SHF-12	12	32	32	2 ¼
SHF-16	16	24	24	2 ⅝
SHF-16L	16	32	32	2 ⅝
SHF-20	20	36	36	2 ¾

Features

Made in U.S.A.

- ** Soft steel safety head is similar in hardness to brass
- ** Ideal replacement for Brass Head where non-sparking is not required
- Double faced head is hardened and tempered forged for maximum strength and durability.

WILLIAMS®

27 PIECE PUNCH & CHISEL SET

Packed in a Roll Pouch

Product Code	Description
PC-27	27 Piece Punch & Chisel Set

Contents Include:

Product Code	Description	Point Diameter (Inches)	Product Code	Description	Blade Width (Inches)
P-3	Pin Punch	3/32	C-8	Cold Chisel	1/4
P-4	Pin Punch	1/8	C-10	Cold Chisel	5/16
P-5	Pin Punch	5/32	C-12	Cold Chisel	3/8
P-6	Pin Punch	3/16	C-16	Cold Chisel	1/2
P-8	Pin Punch	1/4	C-20	Cold Chisel	5/8
P-10	Pin Punch	5/16	C-24	Cold Chisel	3/4
P-13	Solid Punch	3/32	C-28	Cold Chisel	7/8
P-14	Solid Punch	1/8	C-32	Cold Chisel	1
P-15	Solid Punch	5/32	C-36	Cold Chisel	1 1/8
P-16	Solid Punch	3/16			
P-17	Solid Punch	1/4	28449	Punch and Chisel Holder 7/8" Capacity	
P-25	Long Taper Punch	5/32			
P-26	Long Taper Punch	3/16			
P-28	Long Taper Punch	1/4			
P-30	Prick Punch	-			
P-40	Center Punch	-			
P-42	Center Punch	-			

Features

- Heavy duty construction for strength and durability.
- Includes punch and chisel holder for safety.

Made in U.S.A.

PC-27

WILLIAMS®

17 PIECE PUNCH & CHISEL SET

Packed in a Roll Pouch

Product Code	Description
PC-17	17 Piece Punch & Chisel Set

Contents Include:

Product Code	Description	Point Diameter (Inches)	Product Code	Description	Blade Width (Inches)
P-4	Pin Punch	1/8	C-10	Cold Chisel	5/16
P-6	Pin Punch	3/16	C-12	Cold Chisel	3/8
P-8	Pin Punch	1/4	C-16	Cold Chisel	1/2
P-14	Solid Punch	1/8	C-20	Cold Chisel	5/8
P-15	Solid Punch	5/32	C-24	Cold Chisel	3/4
P-16	Solid Punch	3/16	C-42	Cape Chisel	1/4
P-25	Long Taper Punch	5/32	C-62	Diamond Point Chisel	3/8
P-28	Long Taper Punch	1/4			
P-32	Prick Punch	-			
P-40	Center Punch	-			

Features

- Heavy duty construction for strength and durability.

Made in U.S.A.

PC-17

PC-8

WILLIAMS®

8 PIECE PUNCH & CHISEL SET

Packed in a Roll Pouch

Product Code	Description
PC-8	8 Piece Punch & Chisel Set

Contents Include:

Product Code	Description	Point Diameter (Inches)	Product Code	Description	Blade Width (Inches)
P-4	Pin Punch	1/8	C-10	Cold Chisel	5/16
P-6	Pin Punch	3/16	C-16	Cold Chisel	1/2
P-8	Pin Punch	1/4	C-24	Cold Chisel	3/4
P-15	Solid Punch	5/32			
P-40	Center Punch	-			

Features

- Heavy duty construction for strength and durability.

Made in U.S.A.

CS-8

WILLIAMS®

8 PIECE CHISEL SET

Packed in a Roll Pouch

Product Code	Description
CS-8	8 Piece Chisel Set

Contents Include:

Product Code	Description	Blade Width (Inches)	Product Code	Description	Blade Width (Inches)
C-40	Cape Chisel	3/16	C-60	Diamond Point Chisel	1/4
C-42	Cape Chisel	1/4	C-62	Diamond Point Chisel	3/8
C-44	Cape Chisel	5/16	C-72	Round Nose Chisel	1/4
C-46	Cape Chisel	3/8	C-74	Round Nose Chisel	3/8

Features

- Heavy duty construction for strength and durability.

Made in U.S.A.

CS-9

WILLIAMS®

9 PIECE COLD CHISEL SET

Packed in a Roll Pouch

Product Code	Description
CS-9	9 Piece Cold Chisel Set

Contents Include:

Product Code	Description	Blade Width (Inches)	Product Code	Description	Blade Width (Inches)
C-8	Cold Chisel	1/4	C-24	Cold Chisel	3/4
C-10	Cold Chisel	5/16	C-28	Cold Chisel	7/8
C-12	Cold Chisel	3/8	C-32	Cold Chisel	1
C-16	Cold Chisel	1/2	C-36	Cold Chisel	1 1/8
C-20	Cold Chisel	5/8			

Features

- Heavy duty construction for strength and durability.

Made in U.S.A.

WILLIAMS®

17 PIECE PUNCH SET

Packed in a Roll Pouch

Product Code	Description
PS-17	17 Piece Punch Set

Contents Include:

Product Code	Description	Tip Diameter (Inches)	Product Code	Description	Tip Diameter (Inches)
P-3	Pin Punch	3/32	P-16	Solid Punch	3/16
P-4	Pin Punch	1/8	P-17	Solid Punch	1/4
P-5	Pin Punch	5/32	P-25	Long Taper Punch	5/32
P-6	Pin Punch	3/16	P-26	Long Taper Punch	3/16
P-8	Pin Punch	1/4	P-28	Long Taper Punch	1/4
P-10	Pin Punch	5/16	P-30	Prick Punch	-
P-13	Solid Punch	3/32	P-40	Center Punch	-
P-14	Solid Punch	1/8	P-42	Center Punch	-
P-15	Solid Punch	5/32			

Features

- Heavy duty construction for strength and durability.

Made in U.S.A.

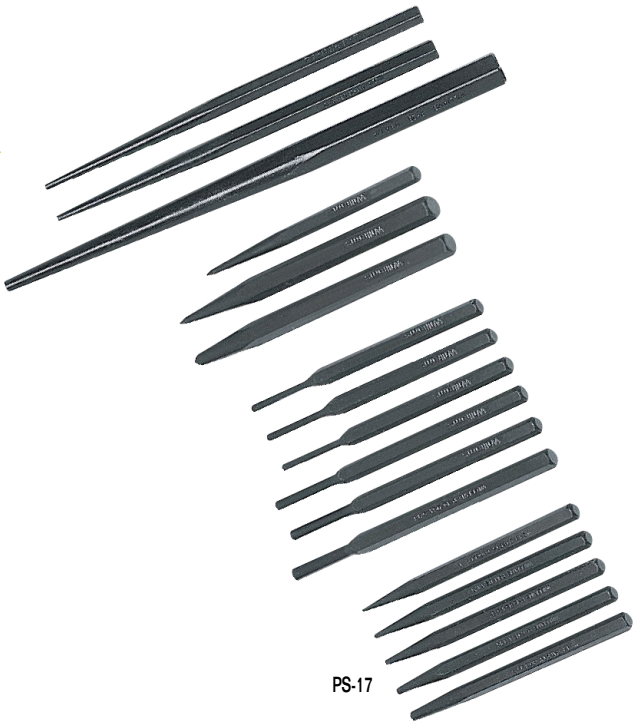

PS-17

WILLIAMS®

4 PIECE CENTER PUNCH SET

Packed in a Roll Pouch

Product Code	Description
PS-4	4 Piece Center Punch Set

Contents Include:

Product Code	Description	Stock Diameter (Inches)	Product Code	Description	Stock Diameter (Inches)
P-38	Center Punch	1/4	P-40	Center Punch	3/8
P-39	Center Punch	5/16	P-42	Center Punch	1/2

Features

- Heavy duty construction for strength and durability.

Made in U.S.A.

PS-4

PS-12

WILLIAMS®

12 PIECE PILOT PUNCH SET

Packed in a Roll Pouch

Product Code	Description
PS-12	12 Piece Pilot Punch Set

Contents Include:

Product Code	Point Diameter	Product Code	Point Diameter
P-51	1/16	P-57	7/32
P-52	5/64	P-58	1/4
P-53	3/32	P-59	5/16
P-54	1/8	P-60	3/8
P-55	5/32	P-61	7/16
P-56	3/16	P-62	1/2

Features

- Designed to apply equal pressure to the end of a pin driving it straight through the hole.
- The ball on the center of the point end assures proper contact with the pin eliminating damage to the pin or hole wall.

Made in U.S.A.

PS-8

WILLIAMS®

8 PIECE PILOT PUNCH SET

Packed in a Roll Pouch

Product Code	Description
PS-8	8 Piece Pilot Punch Set

Contents Include:

Product Code	Point Diameter	Product Code	Point Diameter
P-51	1/16	P-55	5/32
P-52	5/64	P-56	3/16
P-53	3/32	P-57	7/32
P-54	1/8	P-58	1/4

Features

- Designed to apply equal pressure to the end of a pin driving it straight through the hole.
- The ball on the center of the point end assures proper contact with the pin eliminating damage to the pin or hole wall.

Made in U.S.A.

PS-3

WILLIAMS®

3 PIECE BRASS DRIFT PUNCH SET

Packed in a Roll Pouch

Product Code	Description
PS-3	3 Piece Brass Drift Punch Set

Contents Include:

Product Code	Point Diameter
P-63	3/8
P-64	1/2
P-65	3/4

Features

- For aligning unhardened steel or aluminum

Made in U.S.A.

28449

WILLIAMS®

PUNCH AND CHISEL HOLDER

Comfort Grip Handle

Product Code	Description
28449	7/8

Features

- Holds chisel and punch securely
- Protect user from hand injury

WILLIAMS®

COLD CHISELS

Heavy Duty Industrial Grade

Product Code	Stock Size	Blade Width (Inches)	Length (Inches)
C-8	1/4	1/4	5
C-10	1/4	5/16	5
C-12	5/16	3/8	5 1/2
C-15	3/8	7/16	6
C-16	7/16	1/2	6
C-20	1/2	5/8	6 1/2
C-24	5/8	3/4	7
C-28	3/4	7/8	7 1/2
C-32	7/8	1	8
C-36	7/8	1 1/8	8

Features

- The most commonly used chisels in the chisel line.
- For cutting, shaping and removing metal softer than the cutting edge of the chisel.

Made in U.S.A.

C-16

BAHCO®

POINTED CHISELS

Safety impact head

Product Code	Length (Inches)
3739H-250	10
3739H-300	12
3739H-400	15 1/2

Features

- Safety impact head with plastic hand protection

3739H

BAHCO®

SLITTING CHISEL

Safety impact head

Product Code	Length (Inches)
3750H	10

Features

- Safety impact head with plastic hand protection

3750H

BAHCO®

MASON'S CHISEL

Safety impact head

Product Code	Length (Inches)	Tip Width (Inches)
3736MH-250	10"	1"
3736MH-300	12	1"
3736MH-400	15-1/2"	1"

Features

- Safety impact head with plastic hand protection

3736MH

C-126

WILLIAMS®

EXTRA-LONG COLD CHISELS

Heavy Duty Industrial Grade

Product Code	Stock Size	Blade Width (Inches)	Length (Inches)
C-120	1/2	5/8	12
C-124	5/8	3/4	12
C-125	5/8	3/4	14
C-126	5/8	3/4	18
C-132	3/4	7/8	12
C-133	3/4	1	18

Features

- Designed for cutting, shaping and removing metal softer than the cutting edge of the chisel.

Made in U.S.A.

C-422

WILLIAMS®

RIVET-BUSTER CHISEL

Heavy Duty Industrial Grade

Product Code	Stock Size	Blade Width (Inches)	Length (Inches)
C-422	13/16	3/4	12

Features

- Designed for shearing bolt heads and rivets.

Made in U.S.A.

C-44

WILLIAMS®

CAPE CHISELS

Heavy Duty Industrial Grade

Product Code	Stock Size	Blade Width (Inches)	Length (Inches)
C-40	1/4	3/16	5
C-42	3/8	1/4	5
C-44	3/8	5/16	5 3/4
C-46	1/2	3/8	6

Features

- Designed for cutting or grooving keyholes or slots.

Made in U.S.A.

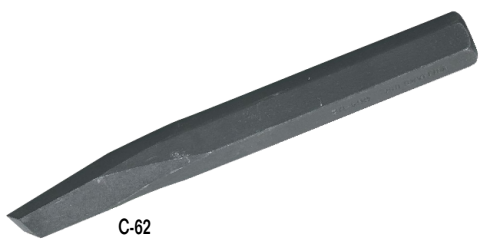
C-62

WILLIAMS®

DIAMOND POINT CHISELS

Heavy Duty Industrial Grade

Product Code	Stock Size	Square Cut	Length (Inches)
C-60	3/8	1/4	5 3/4
C-62	5/8	3/8	7

Features

- Designed for making a V-groove in metal and to clean out inside corners.

Made in U.S.A.

C-74

WILLIAMS®

ROUND NOSE CHISELS

Heavy Duty Industrial Grade

Product Code	Stock Size	Blade Width (Inches)	Length (Inches)
C-72	3/8	1/4	6 1/2
C-73	5/16	5/16	6 1/4
C-74	5/8	3/8	7
C-75	3/4	1/2	8

Features

- Designed for cutting or grooving keyholes or slots.

Made in U.S.A.

WILLIAMS®

PILOT PUNCHES

Heavy Duty Industrial Grade

Product Code	Stock Size	Point Diameter	Length (Inches)
P-51	3/16	1/16	2 3/4
P-52	3/16	5/64	3 1/4
P-53	3/16	3/32	3 1/2
P-54	1/4	1/8	4
P-55	1/4	5/32	4 1/2
P-56	3/8	3/16	4 1/2
P-57	3/8	7/32	5
P-58	7/16	1/4	5 1/2
P-59	7/16	5/16	6
P-60	1/2	3/8	6
P-61	9/16	7/16	6
P-62	5/8	1/2	6

Made in U.S.A.

P-57

Features

- Designed to apply equal pressure to the end of a pin driving it straight through the hole.
- The ball on the center of the point end assures proper contact with the pin eliminating damage to the pin or hole wall.

WILLIAMS®

PIN PUNCHES

Heavy Duty Industrial Grade

Product Code	Stock Size	Point Diameter	Length (Inches)
P-3	5/16	15/16	4 1/2
P-4	5/16	1/8	4 3/4
P-5	5/16	5/32	5
P-6	5/16	3/16	5 1/4
P-8	3/8	1/4	5 3/4
P-10	7/16	5/16	6

Made in U.S.A.

P-6

Features

- For driving out and removing already loosened pins and keys after initial movement by a solid or starter punch.

WILLIAMS®

SOLID PUNCHES

Heavy Duty Industrial Grade

Product Code	Stock Size	Point Diameter	Length (Inches)
P-12	3/8	5/8	5
P-13	3/8	15/16	5
P-14	3/8	1/8	5
P-15	3/8	5/32	5
P-16	3/8	3/16	5
P-17	1/2	1/4	5
P-18	3/8	7/32	5

Made in U.S.A.

P-16

Features

- For loosening frozen or tight pins and keys or knocking out rivets.
- Also called starter punches because they are ideal for loosening frozen pins.

P-28

P-40

P-30

P-64

WILLIAMS®

LONG TAPER PUNCHES

Heavy Duty Industrial Grade

Product Code	Stock Size	Point Diameter	Length (Inches)
P-24	5/16	1/8	8
P-25	3/8	5/32	9
P-26	1/2	3/16	10
P-27	5/8	3/8	15
P-28	5/8	1/4	12
P-28A	3/4	1/4	15
P-29	5/8	5/16	16

Made in U.S.A.

Features
- Designed for aligning the holes in metal pieces through which rivets, bolts, or screws will be inserted.
- Not intended for driving pins as punch may become stuck in work.
- Also called line-up aligning or drift punches.

WILLIAMS®

CENTER PUNCHES

Heavy Duty Industrial Grade

Product Code	Stock Size	Blade Width (Inches)
P-38	1/4	4
P-39	5/16	4 1/2
P-40	3/8	5
P-42	1/2	6

Made in U.S.A.

Features
- Pierces or marks work by indentation for starting pilot drills in metal or other materials.

WILLIAMS®

PRICK PUNCHES

Heavy Duty Industrial Grade

Product Code	Stock Size	Length (Inches)
P-30	1/4	4
P-32	1/2	6

Made in U.S.A.

Features
- For scribing lines into metal before cutting or riveting, and for punching starting holes for short metal screws.
- Point is more tapered than center punch.

WILLIAMS®

BRASS DRIFT PUNCHES

Packed in a Roll Pouch

Product Code	Body Size
P-63	3/8
P-64	1/2
P-65	3/4

Made in U.S.A.

Features
- For aligning unhardened steel or aluminum

WILLIAMS®

4 PIECE PINCH & ROLL BAR SET

Heavy Duty Industrial Grade

Product Code	Description
PBS-7	4 Piece Pinch & Roll Bar Set

Contents Include:

Product Code	Description	Stock Diameter (Inches)
C-80A	Pinch Bar	¾
C-82A	Pinch Bar	¾
C-715	Roll Bar	½
C-718	Roll Bar	⅝

USA Made in U.S.A.

Features

- Heavy duty construction for strength and durability.

PBS-7

WILLIAMS®

3 PIECE HEAVY-DUTY SCREWDRIVER TYPE PRY BAR SET

Product Code	Description
C-803	3 Piece Pry Bar Set

Contents Include:

Product Code	Overall Length (Inches)
C-807	12
C-812	17
C-818	25

USA Made in U.S.A.

Features

- Blade is heat-treated the entire length.
- Handle is ergonomically designed to provide a more comfortable and secure grip
- Curved blade style gives extra leverage

C-803

WILLIAMS®

PRY BARS - SCREWDRIVER TYPE

Contents Include:

Product Code	Size	Overall Length (Inches)
C-807	⅜	12
C-812	⅜	17
C-818	½	25
C-824	½	31
C-836	⅝	36
C-842	⅝	42
C-844	⅞	44
C-858	¾	58

USA Made in U.S.A.

Features

- Blade is heat-treated the entire length.
- Handle is ergonomically designed to provide a more comfortable and secure grip
- Curved blade style gives extra leverage

C-824

C-612

WILLIAMS®

LADYFOOT PRY BARS

Product Code	Stock Size	Overall Length (Inches)
C-612	7/16	12
C-616	9/16	16
C-621	1 1/16	21

Made in U.S.A.

Features

- Curved end ensures better leverage in small areas.
- Other end for aligning work.

C-83

WILLIAMS®

PINCH BARS

Heavy Duty Industrial Grade

Product Code	Overall Length (Inches)	Stock Size	Width of Flat (Inches)
C-80	14	1/2	5/8
C-82	16	5/8	3/4
C-82A	18	3/4	7/8
C-83	19 5/8	3/4	7/8
C-80A	24	3/4	7/8
C-84	30	7/8	1
C-85	38	3/4	7/8
C-86	42	7/8	1

Made in U.S.A.

Features

- Used for aligning, prying and positioning.

C-715

WILLIAMS®

ROLL BARS

Heavy Duty Industrial Grade

Product Code	Overall Length (Inches)	Stock Size
C-709	9	3/8
C-715	16	1/2
C-718	18	5/8

Made in U.S.A.

Features

- Aligning and pry bar with long tapered body and 90 ° rolling head.

WILLIAMS®

2 PIECE COMFORT GRIP PRYBAR SET

Bi-Mold Comfort Grip Handles

Product Code	Description
21661	2 Piece Comfort Grip Prybar Set

Contents Include:

Size	Overall Length (Inches)
Small	8
Large	18

Features

- Bi-mold handles provide comfortable grip, reducing hand fatigue.
- Thumb stop on handle provides control during use.
- Fulcrum end provides extra prying power.

21661

BAHCO®

NAIL PULLER

Hardened Jaws for Durability and Long Life

Product Code	Overall Length (Inches)
38	17 3/4

Features

- High leverage design allows greater pulling torque for removing well-imbedded nails.
- Easy and fast operation for opening wood crates.
- Hardened jaws for durability and long life.

38

Pullers & Industrial Hydraulics

Pullers & Industrial Hydraulics

Williams Pullers

- Spring tension design holds jaws against object being pulled, allowing the adjusting or locking nut to be tightened.
- Curved, reversible jaws are designed for a secure grip, flush to the object being pulled and can be reversed from an inside pull to an outside pull, and from an outside pull to an inside pull.
- Parabolic curved head on the pressure screw for occasional hammer blows to “persuade” frozen gears and pulleys and to reduce mushrooming.
- Hex head on the pressure screw can be turned with a standard hex wrench or socket – no special tools needed.
- Pressure screws have rolled threads – fine NF on manual, coarse NC on hydraulic – instead of cut threads, making them stronger and more durable.
- Replaceable centering point directs power to help prevent cocking of the puller and allows easy, almost friction-free, turning of the pressure screw.
- Yoke and jaws are forged and precisely heat-treated for maximum strength and durability and are compatible with both slide hammer or pressure screw.

Industrial Hydraulics

- Heavy duty, heat treated, grooved saddle provides better surface traction during use.
- Steel stop ring for ram over travel protection.
- Cylinders are burnish rolled for a smooth precision mirror finish, which reduces scoring and prolongs seal life.
- Rod wiper seals out dirt and contaminates.
- Industrial hard chrome plated ram prevents scratching and corrosion.
- One piece steel ram stopper for extra strength and enhanced over travel protection.
- Rectangular return spring design results in even distribution of the load, which helps to eliminate spring breakage and creates quicker retraction.

The ABC's of Selecting the Right Puller

A. What Type of Puller Do I Want to Use?
What would be the Combination that Works the Best?

B. Determine the "Reach"and "Spread" Needed - The puller's reach must equal or exceed the same distance on the part. The puller's spread is the width of the part.

C. Estimate the Puller Tonnage - Generally, if you already have the correct "reach and spread," you will usually have the proper tonnage. If in doubt, use the next larger size.

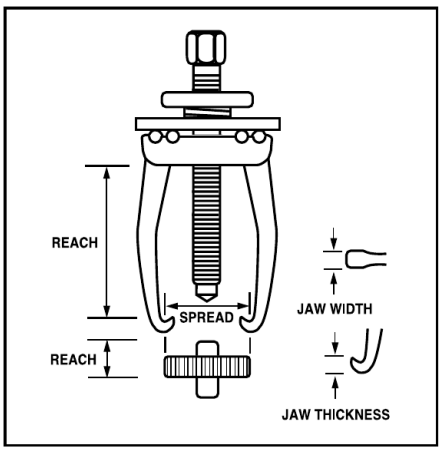

Features and Benefits

- **Spring Tensioned and Self-locking Jaws –** Spring tension design holds jaws against object being pulled, then adjusting or locking nut is tightened, thus clamping the puller securely.
- **Interchangeability –** Different jaws can be used with yoke, thus allowing tremendous variety within the Williams' line.
- **Jaws –** Jaws are forged for maximum strength. Forging is a proven process to control dimensions and provide the basis for precise heat-treating.
- **Curved Jaw Design –** This allows for a secure grip, flush to the object being pulled.
- **Reversible Jaws –** Jaws can be reversed in a simple operation (no nuts and bolts) by pulling up on the locking plate.
- **Two-jaw Positions –** This feature helps avoid stresses created from wedging action to allow straighter pull. One set of jaws and one yoke actually provides capabilities of three pullers.
- **Pins are Forged as Part of the Jaw –** Allows easy interchange of jaws; no nuts or bolts that can be misplaced.
- **Part Numbers on Jaws –** Numbers are stamped on jaws for easy identification and reorder.
- **Parabolic curved anvil head –** A feature on the head of the pressure screw for occasional hammer blows to "persuade" frozen gears and pulleys. Designed to reduce mushrooming. Easily redressed with a hand file.
- **Hex Head on Screw –** This means that the pressure screw can be turned with a standard hex wrench or socket – no special tools needed.
- **Roller threads –** Pressure screws have rolled threads (fine [nf] on manual, course [nc] on hydraulic), instead of cut threads, making them stronger and more durable.
- **Replaceable Centering Point –** The centering point directs power to help prevent cocking of the puller. Also allows easy, almost friction-free, turning of the pressure screw. Generally, only the centering point, and not the whole screw, need replacing, saving your customer big dollars.
- **Yoke –** Yoke is forged and precisely heat-treated for maximum strength and maximum durability.
- **Slide Hammer or Pressure Screws –** Yoke is compatible with both slide hammer or pressure screw. It is also recommended that a lubrication compound (NEVER-SEEZ®) be used on the pressure screws.
- **Slide Hammer –** Many of our pullers can be assembled with a longer pressure screw to use slide hammer power. This fact is especially useful in removing blind hole bearings.

General Rule to Choose Pullers

Manual Pullers- Pressure screw should be at least half the diameter of the shaft on the pulling/pushing job.

Hydraulic Pullers -Maximum tonnage capacity (tons) should be 8 to 10 times the diameter (in inches) of the shaft to be pulled or pushed.

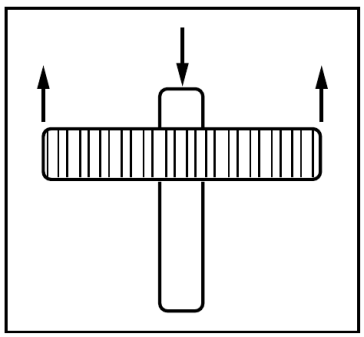

Removing a Gear, Bearing, Pulley, or Other Component from a Shaft

Tools to Use

- **Jaw-Type Puller** - 2- or 3-jaw style, with 3-jaw being the best choice. Manual or hydraulic with outside jaw positions.
- **Push-Pull Puller** - Use male or female adaptors to thread into tapped holes on components.
- **Slide Hammer Puller** - Use on light-duty applications. For use with attachments.
- **Bar-Type Puller with Bearing Separator** Bar type with side rods threaded into bearing separator provides "knife edge" to get behind component or when there is not a good gripping edge.

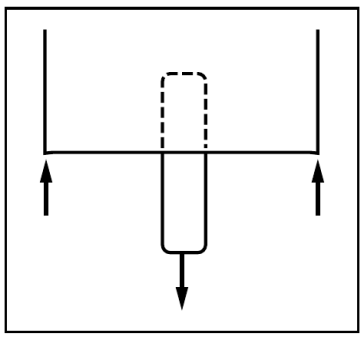

Pulling a Shaft Out of a Housing or Bore

Tools to Use

- **Push-Pull Puller** - Use male or female adaptors.
- **Bar-Type Puller with Bearing Separator** - Use when housing lacks sufficient surface for puller side rods to bear against.
- **Slide Hammer Puller** - Use on light-duty applications. For use with attachments.
- **Slide Hammer Puller** -Use with male or female adaptors. See page 333 for a full listing of compatible adaptors.

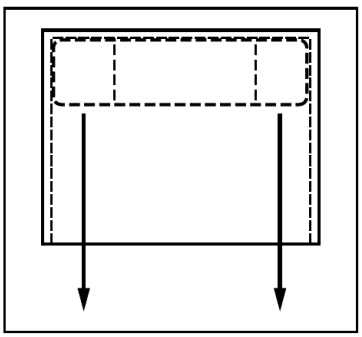

Removing a Bearing or Bushing from a Blind Hole

Tools to Use

- **Jaw-Type Puller** - For inside jaw positions (inside pulls), a manualor hydraulic jaw-type puller can be used with pressure screw or slide hammer variations.
- **Expanded Collet Puller** - The inside diameter should range between 1/4" and 7". Pulling can be done with bridge, bar-type yokes, or slide hammers.
- **Bearing Adaptors with Slide Hammer Puller** Slide Hammer should be used in this application.
- **Bar-Type Puller with Bearing Separator** - Bar type with side rods threaded into bearing separator provides "knife edge" to get behind components or when there is not a good gripping edge.

Warning

- Pullers and parts under stress can break.
  Wear safety goggles while using pullers. Screen the puller from yourself and bystanders. Use the largest size puller possible to do the job. Use a three jaw puller where possible. Inspect puller; do not use puller with worn or damaged parts. Make sure puller is fully engaged and squarely seated.
  Broken parts can cause injury.
- Heating puller jaws can change their strength.
  Do not heat jaws of puller.
  Weakened jaws can break and cause injury.
- Hammering on puller jaws can cause damage.
  Hammer only on curved head of pressure screw.
  Broken parts can cause injury.
- Hand can get caught between slide hammer and hammer stop.
  Keep hand away from front and rear of slide hammer.
  Hand injury can be caused by slide hammer.
- Damaged or loose hydraulic lines can leak or burst.
  Inspect hoses; do not use hoses with cuts, splits, or cracks. Tighten hydraulic connections.
  Hydraulic leak can cause injury.
- **Be sure that pressure screw threads are cleaned and well lubricated when using impact tools on pullers.**
- **Always use protective tip or removable point to prevent pressure screw from mushrooming or splitting.**
- **Always maintain a proper fluid level in hydraulic pump.**
- **Always use a pressure gauge with hydraulic pullers.**
- **Never keep pressure on a hydraulic ram.**
  When job is finished, immediately release ram pressure.
- **Use blind hole bearing pullers rather than torches, chisels, screwdrivers, hammers, prybars, etc. A blind hole puller provides 360° of steady, even pulling power.**

WILLIAMS

MASTER COMBINATION GEAR PULLER SET

2 and 3 Jaw, 10 & 12-1/2 Ton Capacity, Pressure Screw and Slide Hammer

Product Code	Maximum Capacity (Tons)	Maximum Reach (Inches)
87079	12 1/2	8 3/4

87079

Contents Include:

Description	Capacity (Tons)	Maximum Reach (Inches)	Pressure Screw Size (Inches)
Plastic Case	-	-	-
Handle Bar	-	-	-
Slide Hammer Screw	10	-	3/4-16 x 23 3/8
3 1/2 Lb. Slide Hammer	-	-	-
Long Pressure Screw	10	8 3/4	3/4-16 x 12 1/8
Short Pressure Screw	10	5 1/2	3/4-16 x 9 3/16
Special Grip Jaw	12 1/2	5 1/2	-
Jaw	12 1/2	8 3/4	-
2 Jaw Yoke	10	-	-
2 Jaw Yoke Plate	-	-	-
Spring	-	-	-
Adjusting Nut	-	-	-
3 Jaw Yoke	12 1/2	-	-
3 Jaw Yoke Plate	-	-	-
Removable Point	-	-	-
Flat Removable Point	-	-	-
Jaw	12 1/2	5 1/2	-

Features

Made in U.S.A.

- Ideal for heavy-duty use.
- Plastic case keeps all components organized and helps prevent loss.
- Makes a variety of 2 and 3-jaw pressure screw and slide hammer pullers.
- Pulls gears up to 10" diameter.

WILLIAMS

HEAVY DUTY GEAR PULLER SET

2 and 3 Jaw, 10 & 12-1/2 Ton Capacity, Pressure Screw

Product Code	Maximum Capacity (Tons)	Maximum Reach (Inches)
87021	12 1/2	8 3/4

87021

Contents Include:

Description	Capacity (Tons)	Maximum Reach (Inches)	Pressure Screw Size (Inches)
2 Jaw Puller With Long Reach Jaws	10	8 3/4	3/4 - 16 x 12 - 1/8
3 Jaw, Long Reach	12 1/2	8 3/4	-
3 Jaws, Short Reach	12 1/2	5 1/2	-
Yoke - 3 Jaw	-	-	-
Locking Plate - 3 Jaw	-	-	-
Metal Box		-	-

Features

Made in U.S.A.

- Components assemble to form 8 different pullers.
- Pulls gears up to 8" diameter.

87020

WILLIAMS

MEDIUM DUTY COMBINATION GEAR PULLER SET

2 and 3 Jaw, 6 & 7-1/2 Ton Capacity, Pressure Screw and Slide Hammer

Product Code	Maximum Capacity (Tons)	Maximum Reach (Inches)
87020	7 1/2	6

Contents Include:

Description	Capacity (Tons)	Maximum Reach (Inches)	Pressure Screw Size (Inches)
3 Jaw Puller With Long Reach Jaws	6	6	5/8 - 18 x 6 7/8
3 Jaws, Short Reach	7 1/2	3	-
Yoke - 2 Jaw	6	-	-
2 1/8 Lb. Slide Hammer	-	-	-
Slide Hammer Screw	-	-	5/8 - 18 x 18 1/16
Pulling Plate	-	-	-
Metal Tool Box 19" X 5 7/8" X 2 1/2"	-	-	-

Features

- Components assemble to form 6 different pullers.
- Pulls gears up to 8" diameter.

Made in U.S.A.

87019

WILLIAMS

LIGHT DUTY COMBINATION GEAR PULLER SET

3-Jaw, 2-1/2 Ton Capacity, Pressure Screw and Slide Hammer

Product Code	Maximum Capacity (Tons)	Maximum Reach (Inches)
87019	2 1/2	8 3/4

Contents Include:

Description	Capacity (Tons)	Maximum Reach (Inches)	Pressure Screw Size (Inches)
3 Jaw Puller With Short Reach Jaws	2 1/2	2 1/2	3/8 - 16 x 6 1/16
3 Jaws, Long Reach	2 1/2	3 1/2	-
1 1/16 Lb. Slide Hammer	-	-	-
Slide Hammer Screw	-	-	3/8 - 16 x 12 5/8
Metal Tool Box 12" X 4 1/2" X 2"	-	-	-

Features

- Components assemble to form 8 different pullers.
- Pulls gears up to 3" diameter.

Made in U.S.A.

87018

WILLIAMS

SLIDE HAMMER SETS

Product Code	Slide Hammer Weight (Lbs.)	Slide Screw Size (Inches)
87016	1 1/16	3/8-16 x 12 5/8
87017	2 1/8	5/8-18 x 18 1/16
87018	3 1/2	3/4-16 x 23 3/8

Features

- Converts pressure-screw type pullers to slide hammer use.
- Pressure screw is removed and slide screw assembly is inserted.
- Sliding hammer "shocking" action loosens and helps remove gears and bearings.

Made in U.S.A.

WILLIAMS®

2 TON CAPACITY GRAB'N GO PULLER SET

Short and Long 2-Jaw Puller Set

Product Code	Description
87081	2 Ton Capacity 2 Jaw Grab'n Go Puller Set

Components:

Jaw Length	Number of Jaws	Capacity (Tons)	Maximum Reach (Inches)	Inside Spread (Inches)	Outside Spread (Inches)
Short Jaws	2	2	2 1/2	7/8 - 3 1/4	3
Long Jaws	2	2	3 1/2	7/8 - 3 3/4	4

Pressure screw size: 3/8" -16 x 6 1/16"

Made in U.S.A.

Features

- Clear plastic storage tube keeps components together.
- Totally portable - Ideal for use in the shop or at the job site.
- Components assemble to form 4 different pullers:
  - Short 2-jaw external puller
  - Short 2-jaw internal puller
  - Long 2-jaw external puller
  - Long 2-jaw internal puller

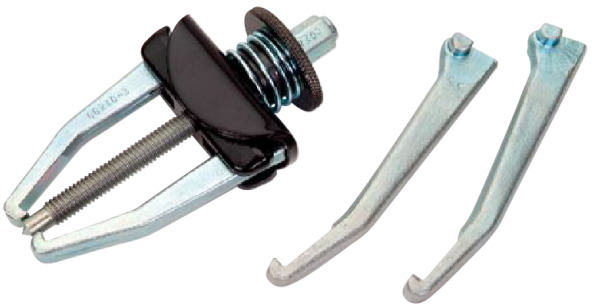

87081

WILLIAMS®

2-1/2 TON CAPACITY GRAB'N GO PULLER SET

Short and Long 3-Jaw Puller Set

Product Code	Description
87082	2 1/2 Ton Capacity 3 Jaw Grab'n Go Puller Set

Components:

Jaw Length	Number of Jaws	Capacity (Tons)	Maximum Reach (Inches)	Inside Spread (Inches)	Outside Spread (Inches)
Short Jaws	3	2 1/2	2 1/2	7/8 - 3 1/4	3
Long Jaws	3	2 1/2	3 1/2	7/8 - 3 3/4	4

Pressure screw size: 3/8" -16 x 6 1/16"

Made in U.S.A.

Features

Clear plastic storage tube keeps components together.
Totally portable - Ideal for use in the shop or at the job site.
Components assemble to form 4 different pullers:
- Short 3-jaw external puller
- Short 3-jaw internal puller
- Long 3-jaw external puller
- Long 3-jaw internal puller

87082

WILLIAMS®

4-1/2 & 6 TON CAPACITY GRAB'N GO PULLER SET

Short and Long 2-Jaw Puller Set

Product Code	Description
87083	4 1/2 & 6 Ton Capacity 2 Jaw Grab'n Go Puller Set

Components:

Jaw Length	Number of Jaws	Capacity (Tons)	Maximum Reach (Inches)	Inside Spread (Inches)	Outside Spread (Inches)
Short Jaws	2	6	3	1 1/2 - 3 1/2	4 1/2
Long Jaws	2	4 1/2	6	3/4 - 8	NA

Pressure screw size: 5/8" -18 x 6 7/8"

Made in U.S.A.

Features

Clear plastic storage tube keeps components together.
Totally portable - Ideal for use in the shop or at the job site.
Components assemble to form 3 different pullers:
- Short 2-jaw external puller
- Short 2-jaw internal puller
- Long 2-jaw internal puller (NOTE: long jaws are designed for internal pulling only)

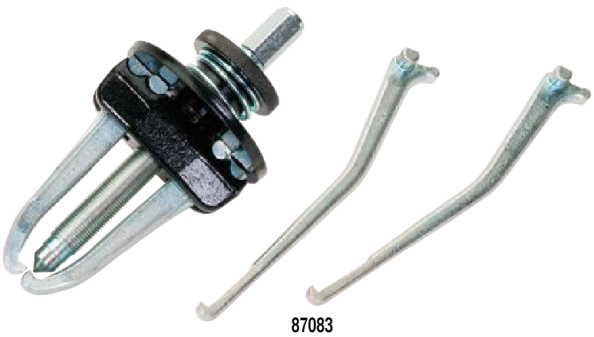

87083

87084

WILLIAMS®

6 & 7-1/2 TON CAPACITY GRAB'N GO PULLER SET

Short and Long 3-Jaw Puller Set

Product Code	Description
87084	6 & 7 ½ Ton Capacity 3 Jaw Grab'n Go Puller Set

Components:

Jaw Length	Number of Jaws	Capacity (Tons)	Maximum Reach (Inches)	Inside Spread (Inches)	Outside Spread (Inches)
Short Jaws	3	7 1/2	3	11/2 - 3 1/2	4 1/2
Long Jaws	3	6	6	3/4 - 8	NA

Pressure screw size: 5/8" -18 x 6 7/8"

Made in U.S.A.

Features

- Clear plastic storage tube keeps components together.
- Totally portable - Ideal for use in the shop or at the job site.
- Components assemble to form 3 different pullers:
  - Short 3-jaw external puller
  - Short 3-jaw internal puller
  - Long 3-jaw internal puller (NOTE: long jaws are designed for internal pulling only)

87033

WILLIAMS®

BLIND HOLE BEARING PULLER SETS

Product Code	Description	Range Size (Inches)
87033	Basic Blind Hole Puller Set	7/16 - 1 1/8

Set Includes:

Expander Rod	7/8" Collet
1/2" Collet	1" Collet
5/8" Collet	2 1/8" Pound Slide Hammer & Screw
3/4" Collet	Crossbar

Product Code	Description	Range Size (Inches)
87034	Blind Hole Expansion Set	¼ - 7/16

Set Includes:

Expander Rod	
1/4" Collet	3/8" Collet
5/16" Collet	7/16" Collet

Made in U.S.A.

Features

- Blind hole bearing pullers can access blind hole bearings, bushings, and sleeves that regular pullers cannot grip.
- Slide hammer is used for pulling action.

WILLIAMS®

TWO JAW PRESSURE-SCREW PULLERS

2 to 20 Ton Capacity

Product Code	Capacity (Tons)	Maximum Reach (Inches)	Inside Spread (Inches)	Outside Spread (Inches)	Pressure Screw Size (Inches)	Jaw Thickness (Inches)	Jaw Width (Inches)
87001	2	2 1/2	3 1/4	3	3/8 x 5 1/16	3/16	3/8
87002	2	3 1/2	3 3/4	4	3/8 x 6 1/16	3/16	3/8
87005	6	3	3 1/2	4 1/2	5/8 x 6 7/8	1/4	3/4
87008	10	5 1/2	7 1/2	8 1/2	3/4 x 9 13/16	1/4	15/16
87009	10	8 3/4	8	10	3/4 x 12 1/8	1/4	15/16
87012	10	15	11 1/2	13 3/4	3/4 x 18 15/16	3/8	1
87014	20	9 1/2	10	12	1 x 15	7/16	1 1/4
87015	20	14 3/8	13	16	1 x 19	9/16	1 1/4

Made in U.S.A.

Features

- Convertible from external to internal pull - each item makes 2 pullers.
- Self-locking jaws hold puller in place for one-hand operation.
- Interchangable parts allow tremendous variety of applications.
- Jaws are forged for maximum strength and durability.
- All pullers are easily assembled without the use of other tools.
- Curved anvil heads on the pressure screw allow use of hammer to “shock” frozen gears and pulleys.
- Pullers are compatible with slide hammer sets 87016, 87017, and 87018, simply match the correct pressure screw size.

2-jaw

WILLIAMS®

THREE JAW PRESSURE-SCREW PULLERS

2-1/2 to 12-1/2 Ton Capacity

Product Code	Capacity (Tons)	Maximum Reach (Inches)	Inside Spread (Inches)	Outside Spread (Inches)	Pressure Screw Size (Inches)	Jaw Thickness (Inches)	Jaw Width (Inches)
87003	2 1/2	2 1/2	3 1/4	3	3/8 x 5 1/16	3/16	3/8
87004	2 1/2	3 1/2	3 3/4	4	3/8 x 6 1/16	3/16	3/8
87006	6	6	8	NR	5/8 x 6 7/8	7/32	5/16
87007	7 1/2	3	3 1/2	4 1/2	5/8 x 6 7/8	1/4	3/4
87010	12 1/2	5 1/2	7 1/2	8 1/2	3/4 x 9 13/16	1/4	15/16
87011	12 1/2	8 3/4	8	10	3/4 x 12 1/8	1/4	15/16
87013	12 1/2	15	11 1/2	13 3/4	3/4 x 18 15/16	3/8	1

Made in U.S.A.

Features

- NR = Not Recommended, Designed as an inside pull only.
- Convertible from external to internal pull - all except 87006 make 2 pullers.
- Self-locking jaws hold puller in place for one-hand operation.
- Interchangable parts allow tremendous variety of applications.
- Jaws are forged for maximum strength and durability.
- All pullers are easily assembled without the use of other tools.
- Curved anvil heads on the pressure screw allow use of hammer to “shock” frozen gears and pulleys.
- Pullers are compatible with slide hammer sets 87016, 87017, and 87018, simply match the correct pressure screw size.

3-jaw

WILLIAMS®

COMBINATION 2 / 3 JAW PRESSURE-SCREW PULLERS

20 Ton Capacity

Product Code	Capacity (Tons)	Maximum Reach (Inches)	Inside Spread (Inches)	Outside Spread (Inches)	Pressure Screw Size (Inches)	Jaw Thickness (Inches)	Jaw Width (Inches)
87045	20	9 1/2	10	12	1 x 15	7/16	1 1/4

Made in U.S.A.

Features

- Similar in appearance to 3-jaw puller, with unique design that enables use as a 2-jaw or 3-jaw puller.
- Includes 3 jaws.

87045

WILLIAMS®

CHAIN PULLER

10 Ton Capacity

Product Code	Capacity (Tons)	Maximum Reach (Inches)	Pressure Screw Size (Inches)	Jaw Thickness (Inches)	Jaw Width (Inches)	Pressure Screw Extension (Inches)
87024	10	54	3/4 x 12 1/8	1/2	1 1/4	6

Made in U.S.A.

Features

- Provides extra long reach for large diameter gears and pulleys.
- 4-foot alloy chains with articulated jaws and grab hooks for maximum gripping power.

87024

WILLIAMS®

2 JAW HYDRAULIC PULLERS

Product Code	Description	Capacity (Tons)	Number of Jaws	Maximum Reach (Inches)	Inside Spread (Inches)	Outside Spread (Inches)	Pressure Screw Size (Inches)	Jaw Thickness (Inches)	Jaw Width (Inches)
87046	6 Ton, 2 Jaw	6	2	3	3 1/2	4 1/2	1 1/8 x 20 1/2	1/4	3/4
87047	10 Ton, 2 Jaw	10	2	8 3/4	8	10 1/2	3/4 x 16 1/4	1/4	15/16
87048	10 Ton, 2 Jaw	10	2	15	11 1/2	13 3/8	3/4 x 23 3/8	3/8	1

Made in U.S.A.

87047

WILLIAMS®

COMBINATION 2/3 JAW HYDRAULIC PULLERS

Product Code	Description	Capacity (Tons)	Number of Jaws	Maximum Reach (Inches)	Inside Spread (Inches)	Outside Spread (Inches)	Pressure Screw Size (Inches)	Jaw Thickness (Inches)	Jaw Width (Inches)
87049	20 Ton, 2/3 Jaw	20	2/3	9 1/2	NR	13	1 1/8 x 20 1/2	7/16	1 1/4
87050	20 Ton, 2/3 Jaw	20	2/3	14	NR	15	1 1/8 x 20 1/2	9/16	1 1/4
87052	20 Ton, 2/3 Jaw	20	2/3	19	NR	20	1 1/8 x 20 1/2	1 1/8	1 1/2
87054	50 Ton, 2 Jaw	50	2/3	28	NR	44	1 5/8 x 30	1 7/16	2

NR = Not Recommended, Designed as an outside puller only.

Made in U.S.A.

Features

- Ideal for the most rugged industrial applications.
- Hydraulic power increases versatility of the puller.
- Reduces effort and increases pulling safety.

87050

87054

WILLIAMS

TIGHT-GRIP STUD REMOVER / INSTALLER SET

87032

Remove and Install Coarse and Fine Thread Studs from 1/4" through 5/8" Diameter

Product Code	Description
87032	15 Piece Stud Remover / Installer Set

Contents Include:

Product Code	Description	Stud Size (Inches)
87035	Stud Remover / Installer Housing	
87055	Collet 1/4-20	1/4 - 20
87056	Collet 1/4-28	1/4 - 28
87057	Collet 5/16-18	5/16 - 18
87058	Collet 5/16-24	5/16 - 24
87059	Collet 3/8-16	3/8 - 16
87060	Collet 3/8-24	3/8 - 24
87061	Collet 7/16-14	7/16- 14
87062	Collet 7/16-20	7/16 - 20
87063	Collet 1/2-13	1/2 - 13
87064	Collet 1/2-20	1/2 - 20
87065	Collet 9/16-12	9/16 - 12
87066	Collet 9/16-18	9/16 -18
87067	Collet 5/8-11	5/8 - 11
87068	Collet 5/8-18	5/8 - 18

Features

USA Made in U.S.A.

- Remove studs without damaging the threads.
- Collet is placed in housing and threaded over stud. Draw bolt is then used to clamp tool onto stud for secure removal or installation.
- Studs may be reused.
- Ideal for working in confined areas.
- Works even if only a few threads are exposed.

WILLIAMS

TIGHT-GRIP PIPE NIPPLE REMOVER & INSTALLER KITS

87025

87026

87027

Remove and Install Pipe Nipples Without Thread Damage

Product Code	Description
87025	Pipe Nipple Remover / Installer Kit for 1/8", 1/4", and 3/8" NPT Pipe Nipples

87025 Includes:

87035	Stud Remover / Installer Housing
87036	Collet, 1/8" NPT
87037	Collet, 1/4" NPT
87038	Collet, 3/8" NPT

Product Code	Description
87026	Pipe Nipple Remover / Installer Kit for 1/2" and 3/4" NPT Pipe Nipples

87026 Includes:

87039	Stud Remover / Installer Housing
87040	Collet, 1/2" NPT
87041	Collet, 3/4" NPT

Product Code	Description
87027	Pipe Nipple Remover / Installer Kit for 1" and 1 1/4" NPT Pipe Nipples

87027 Includes:

87042	Stud Remover / Installer Housing
87043	Collet, 1" NPT
87044	Collet, 1 1/4" NPT

Features

USA Made in U.S.A.

- Remove pipe nipples and other lengths of pipe without damaging pipe threads.
- Collet is placed in housing and threaded over pipe. Draw bolt is then used to clamp tool onto nipple for secure removal or installation.
- Nipples and other lengths of pipe may be reused.
- Essential when working with decorative brass, bronze, and stainless piping.
- Ideal for working in confined areas.

WILLIAMS®

INDIVIDUAL TIGHT-GRIP STUD REMOVER / INSTALLERS

Product Code	Description (Stud Size)	Size (Inches)	Uses Housing Number (Below)
87055	Collet 1/4-20	1/4 - 20	87035
87056	Collet 1/4-28	1/4 - 28	87035
87057	Collet 5/16-18	5/16 - 18	87035
87058	Collet 5/16-24	5-16 - 24	87035
87059	Collet 3/8-16	3/8 - 16	87035
87060	Collet 3/8-24	3/8 - 24	87035
87061	Collet 7/16-14	7/16- 14	87035
87062	Collet 7/16-20	7/16 - 20	87035
87063	Collet 1/2-13	1/2 - 13	87035
87064	Collet 1/2-20	1/2 - 20	87035
87065	Collet 9/16-12	9/16 - 12	87035
87066	Collet 9/16-18	9/16 -18	87035
87067	Collet 5/8-11	5/8 - 11	87035
87068	Collet 5/8-18	5/8 - 18	87035
87069	Collet 3/4-10	3/4 - 10	87039
87070	Collet 7/8-9	7/8 - 9	87039
87071	Collet 1-8	1 - 8	87039

87036

WILLIAMS®

INDIVIDUAL TIGHT-GRIP PIPE NIPPLE REMOVER / INSTALLERS

Product Code	Description (Stud Size)	Size (Inches)	Uses Housing Number (Below)
87036	Collet 1/8 NPT	1/8 NPT	87035
87037	Collet 1/4 NPT	1/4 NPT	87035
87038	Collet 3/8 NPT	3/8 NPT	87035
87040	Collet 1/2 NPT	1/2 NPT	87039
87041	Collet 3/4 NPT	3/4 NPT	87039
87043	Collet 1 NPT	1 NPT	87042
87044	Collet 1 1/4 NPT	1 1/4 NPT	87042

87035

WILLIAMS®

HOUSINGS

Product Code	Description
87035	Use with collets above for stud sizes 1/4" through 5/8" and pipe nipple sizes 1/8" through 3/8" NPT
87039	Use with collets above for stud sizes 3/4" through 1" and pipe nipple sizes 1/2" and 3/4" NPT
87042	Use with collets above for pipe nipple sizes 1" and 1 1/4" NPT

Features

- The most ingenous stud and pipe nipple pullers available. Unique two-piece system can be used to remove stubborn studs and nipples, as well as install new ones without damaging the threads. Tapered collets thread onto stud, even if only a few threads are exposed. Tightening the housing bolt draws the collet into the housing and clamps the the collet onto the stud. Doesn't damage threads. Larger sizes are available as a special order.
- NOTE: Avoid bottoming or shouldering studs to avoid shearing or damaging stud or workpiece.

87035

87031

WILLIAMS

PULLING PLATE

Product Code	Description
87031	Pulling Plate

Features
- Ideal where there is no gripping surface for the puller alone.
- Plate is attached to item being pulled - with puller clamped behind the plate.
- Plate allows pulling action where space does not allow for puller accessories.
- Includes 4 each of the following screws: 1/4 - 20 x 3/4" and 1/4 - 28 x 1".
- Plate diameter is 3 5/8".

CG10F

WILLIAMS

CROSSBAR

Product Code	Description
CG10F	Crossbar for 6 - 7 1/2 ton slide hammer puller screws

Features
- Ideal for turning the slide hammer screws.
- Fits 87017 Slide Hammer set.

87030 87029 87028

WILLIAMS

REPLACEMENT PRESSURE SCREW POINTS

Product Code	Description
87028	Screw point for 6 and 7 1/2 ton pullers
87029	Screw point for 10 and 12 1/2 ton pullers
87030	Screw point for 20 ton pullers

Features
- Match screw point to puller capacity.

WILLIAMS

PULLER REPLACEMENT PARTS

2 Ton & 2-1/2 Ton Puller Group

Product Code	Product Description	Capacity (Tons)	2-Jaw Yoke	3-Jaw Yoke	Std. Pres. Screw	Slide Screw	Slide Hammer	2-Jaw Lock Plate	3-Jaw Lock Plate	Spring	Adjusting Nut	Standard Jaw	Long Jaw
87001	2 TON, 2 JAW PULLER	2	CG240-2		CG240-1	CG240-8	CG240-9	CG240-5		CG240-6	CG240-7	CG240-3	
87002	2 TON, 2 JAW PULLER	2	CG240-2		CG240-11	CG240-8	CG240-9	CG240-5		CG240-6	CG240-7		CG240-10
87003	2 1/2 TON, 3 JAW PULLER	2 1/2		CG243-2	CG240-1	CG240-8	CG240-9		CG243-5	CG240-6	CG240-7	CG240-3	
87004	2 1/2 TON, 3 JAW PULLER	2 1/2		CG243-2	CG240-11	CG240-8	CG240-9		CG243-5	CG240-6	CG240-7		CG240-10

6 Ton & 7-1/2 Ton Puller Group

Product Code	Product Description	Capacity (Tons)	2-Jaw Yoke	3-Jaw Yoke	Std. Pres. Screw	Slide Screw	Slide Hammer	2-Jaw Lock Plate	3-Jaw Lock Plate	Spring	Adjusting Nut	Standard Jaw	Long Jaw
87005	6 TON, 2 JAW PULLER	6	CG250-2		CG250-1A	CG250-8A	CG250-9	CG250-5		CG250-6	CG250-7	CG250-3	
87006	6 TON, 3 JAW PULLER	6		CG253-2	CG250-1A	CG250-8A	CG250-9		CG250-5	CG250-6	CG250-7		CG250-10
87007	7 1/2 TON, 3 JAW PULLER	7 1/2		CG253-2	CG250-1A	CG250-8A	CG250-9		CG250-5	CG250-6	CG250-7	CG250-3	

10 Ton & 12-1/2 Ton Puller Group

Product Code	Product Description	Capacity (Tons)	2-Jaw Yoke	3-Jaw Yoke	Std. Pres. Screw	Slide Screw	Slide Hammer	2-Jaw Lock Plate	3-Jaw Lock Plate	Spring	Adjusting Nut	Standard Jaw	Long Jaw	Extension Piece - 8 1/4"
87008	10 TON, 2 JAW PULLER	10	CG270-2		CG270-1A	CG270-8A	CG66-2	CG270-5		CG270-6	CG270-7	CG270-3		
87009	10 TON, 2 JAW PULLER	10	CG270-2		CG270-11A	CG270-8A	CG66-2	CG270-5		CG270-6	CG270-7		CG270-10	CG270-13
87012	10 TON, 2 JAW PULLER	10	CG270-2		CG270-11A	CG270-8A	CG66-2	CG270-5		CG270-6	CG270-7		CG270-12	CG270-13
87010	12 1/2 TON, 3 JAW PULLER	12 1/2		CG273-2	CG270-11A	CG270-8A	CG66-2		CG273-5	CG270-6	CG270-7	CG270-3		
87011	12 1/2 TON, 3 JAW PULLER	12 1/2		CG273-2	CG270-11A	CG270-8A	CG66-2		CG273-5	CG270-6	CG270-7		CG270-10	CG270-13
87013	12 1/2 TON, 3 JAW PULLER	12 1/2		CG273-2	CG270-11A	CG270-8A	CG66-2		CG273-5	CG270-6	CG270-7		CG270-12	CG270-13

20 Ton Puller Group

Product Code	Product Description	Capacity (Tons)	2-Jaw Yoke	3-Jaw Yoke	Std. Pres. Screw	Slide Screw	Slide Hammer	2-Jaw Lock Plate	3-Jaw Lock Plate	Spring	Adjusting Nut	Standard Jaw	Long Jaw	Plug
87014	20 TON, 2 JAW PULLER	20	CG300-2		CG300-1			CG300-5		CG300-6	CG300-7	CG300-3		
87015	20 TON, 2 JAW PULLER	20	CG300-2		CG305-8			CG300-5		CG300-6	CG300-7		CG305-9	
87045	20 TON, 2/3 JAW PULLER	20	CG400-2	CG400-2	CG300-1			CG400-5	CG400-5	CG400-6	CG400-7	CG300-3		CG343-1

WILLIAMS®

SINGLE ACTING CYLINDERS

- 39 models
- Internal plunger threads
- Snap in grooved saddles
- Rod wiper seals out dirt and contamination
- Collar fixture threads
- Two base mounting holes on most models
- High strength steel construction from gun drilled solid bar
- High flow 3/8" NPTF couplers
- Collar thread protector
- One piece high grade alloy bearing for side load protection and long life
- Polyurethane cup seal provides optimum performance
- Industrial hard chrome plated ram helps prevent rust and corrosion
- Solid steel cylinder body
- Heavy duty return spring provides quicker retraction
- Ideal for lifting and pressing
- Maximum working pressure: 10,000 psi / 700 bar

6C05T05

6C05T07

CYLINDER DIMENSIONS

Cylinder Capacity (tons)	Stroke (in)	Product Code	Cylinder Effective Area (in^2)	Pressure at Capacity (psi)	Oil Capacity (in^3)	Collapsed Height A (in)	Extended Height B (in)	Cylinder Bore Dia. C (in)	Outside Dia. D (in)	Plunger Dia. E (in)
5	0.63	6C05T00	1.10	9,090	0.69	1.61	2.24	1.18	2.36 x 1.58	0.98
	1.00	6C05T01	1.00	10,000	1.00	4.58	5.58	1.13	1.50	1.00
	3.07	6C05T03			3.07	6.65	9.72			
	5.08	6C05T05			5.08	8.70	59.50			
	7.09	6C05T07			7.09	10.71	17.80			
	9.09	6C05T09			9.09	12.72	21.81			
10	1.00	6C10T01	2.24	8,930	2.24	3.62	4.62	1.69	2.26	1.49
	2.01	6C10T02			4.50	4.84	6.85	1.69	2.26	1.49
	4.02	6C10T04			9.00	6.85	10.87			
	5.94	6C10T06			13.31	9.84	15.78			
	7.95	6C10T08			17.81	11.85	19.80			
	9.96	6C10T10			22.31	13.86	23.82			
	11.97	6C10T12			26.81	15.87	27.84			
	14.02	6C10T14			31.40	17.72	31.74			

6C10T02

6C10T06

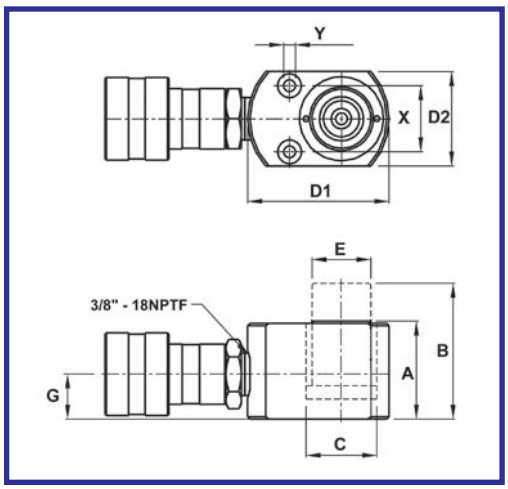

	Saddle Dia.	Base to Inlet Port	Collar Thread	Collar Thread Length	Plunger Internal Thread	Plunger Thread Length	Base Mounting Hole			Product Code
							Bolt Circle	Thread	Thread Depth	
	F (in)	(in)	(in)	(in)	(in)	(in)	(in)	(in)	(in)	
	N/A	0.75	N/A	N/A	N/A	N/A	1.10	0.2	N/A	6C05T00
	0.98	0.79	1 ½ -16	1.10	¾"-16UNF	0.63	1.00	¼" - 20UNC	0.55	6C05T01
										6C05T03
										6C05T05
										6C05T07
										6C05T09
	N/A	0.77	2 ¼ -14	1.30	#10-24UNC	0.24	1.56	5/16" - 18UNC	0.55	6C10T01
	1.38	0.77	2 ¼ -14	1.30	1"-8UNC	0.79	1.56	5/16"-18UNC	0.55	6C10T02
										6C10T04
										6C10T06
										6C10T08
										6C10T10
										6C10T12
										6C10T14

WILLIAMS

SINGLE ACTING CYLINDERS

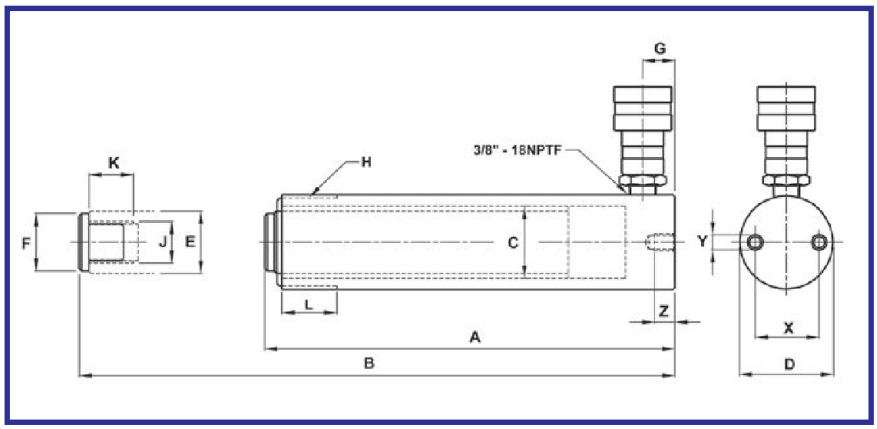

6C30T08

CYLINDER DIMENSIONS

Cylinder Capacity (tons)	Stroke (in)	Product Code	Cylinder Effective Area (in^2)	Pressure at Capacity (psi)	Oil Capacity (in^3)	Collapsed Height A (in)	Extended Height B (in)	Cylinder Bore Dia. C (in)	Outside Dia. D (in)	Plunger Dia. E (in)	Saddle Dia. F (in)	
15	0.99	6C15T01	3.14	9,550	3.11	4.88	5.87	2.00	2.75	1.63	1.50	
	2.01	6C15T02			6.31	5.87	7.88					
	3.98	6C15T04			12.50	7.87	11.85					
	5.87	6C15T06			18.43	10.67	16.54					
	7.87	6C15T08			24.71	12.68	20.55					
	9.88	6C15T10			31.02	14.69	24.57					
	12.01	6C15T12			37.71	16.65	28.66					
	14.02	6C15T14			44.02	18.66	32.68					
25	1.02	6C25T01	5.14	9,730	5.24	5.84	6.86	2.56	3.35	2.24	1.97	
	2.01	6C25T02			10.33	6.82	8.83					
	3.94	6C25T04			20.25	8.78	12.72					
	5.94	6C25T06			30.53	10.79	16.73					
	7.95	6C25T08			40.86	12.80	20.75					
	9.96	6C25T10			51.19	14.80	24.76					
	12.24	6C25T12			62.91	16.73	28.97					
	14.25	6C25T14			73.25	18.74	32.99					
30	8.27	6C30T08	6.49	9,240	53.67	15.24	23.51	2.87	4.00	2.24	2.13	
55	2.01	6C55T02	10.99	10,000	22.09	6.93	8.94	3.74	5.00	3.15	2.76	
	3.98	6C55T04			43.74	8.94	12.92					
	6.22	6C55T06			68.36	11.14	17.36					
	13.27	6C55T13			145.84	18.15	31.42					
75	6.14	6C75T06	16.10	9,320	98.85	11.22	17.36	4.53	5.79	3.74	2.76	
	13.11	6C75T13			211.07	19.37	32.48					
100	6.61	6C100T06	20.57	9,720	135.97	14.06	20.67	5.12	6.97	4.13	2.76	
	10.24	6C100T13			210.64	17.68	27.92					

6C15T06

6C25T10

6C55T06

6C100T06

	Base to Inlet Port	Collar Thread	Collar Thread Length	Plunger Internal Thread	Plunger Thread Length	Base Mounting Hole			Product Code
						Bolt Circle	Thread	Thread Depth	
	G (in)	H (in)	L (in)	J (in)	K (in)	X (in)	Y (in)	Z (in)	
	0.98	2 ¾ -16	1.18	1"-8UNC	0.98	1.88	⅜"-16UNC	0.51	6C15T01 6C15T02 6C15T04 6C15T06 6C15T08 6C15T10 6C15T12 6C15T14
	0.98	3 5/16 -12	1.93	1 ½ -16	1.18	2.31	½"-13UNC	0.75	6C25T01 6C25T02 6C25T04 6C25T06 6C25T08 6C25T10 6C25T12 6C25T14
	1.97	3 5/16 -12	1.93	1 ½ -16	1.18	N/A			6C30T08
	1.22	5 - 12	2.17	N/A		3.75	½"-13UNC	0.75	6C55T02 6C55T04 6C55T06 6C55T13
	1.18	5 ¾ - 12	1.73	N/A					6C75T06 6C75T13
	1.57	6 ⅛ - 12	1.73	N/A		5.50	¾"-10UNC	1	6C100T06 6C100T13

WILLIAMS®

DOUBLE ACTING CYLINDERS

- Rod wiper seals out dirt and contamination
- High strength steel construction from gun drilled solid bar
- High flow 3/8" NPTF couplers
- One piece high grade alloy bearing for side load protection and long life
- Ideal for pushing and pulling
- Maximum working pressure: 10,000 psi / 700 bar

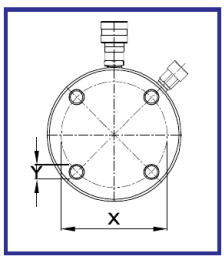

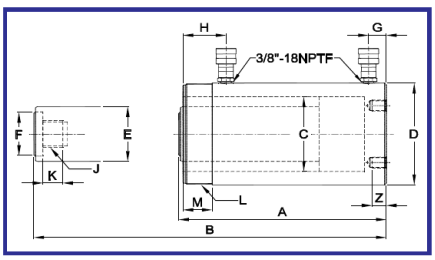

6CD55T13

DOUBLE ACTING CYLINDER SPECIFICATIONS

Cylinder Capacity	Stroke	Product Code	Maximum Cylinder Capacity		Cylinder Effective Area		Oil Capacity		Collapsed Height	Extended Height	Cylinder Bore Dia.	Outside Dia.
(tons)	(in)		Push (ton)	Pull (ton)	Push (in²)	Pull (in²)	Push (in³)	Pull (in)	A (in)	B (in)	C (in)	D (in)
10	10.04	6CD10T10	11.4	3.8	2.23	0.74	22.41	7.47	16.14	26.18	1.69	2.87
	11.97	6CD10T12					26.71	8.90	18.03	30.00		
30	8.15	6CD30T08	32.9	16.2	6.49	3.19	52.93	26.02	15.31	23.46	2.87	3.98
	14.49	6CD30T15					94.09	46.26	21.65	36.14		
55	6.18	6CD55T06	55.7	16.2	10.99	3.19	67.93	19.74	13.03	19.21	3.74	5.00
	13.19	6CD55T13					144.94	42.11	20.04	33.23		
	20.12	6CD55T20					221.09	64.24	28.86	49.98		
75	6.10	6CD75T06	81.7	25.9	16.09	5.12	98.1	31.21	13.70	19.80	4.53	5.75
	13.11	6CD75T13					210.93	67.06	20.71	33.82		
100	6.57	6CD100T06	104.4	48.6	20.57	9.58	135.23	62.98	14.06	20.63	5.12	6.97
	13.11	6CD100T13					269.66	125.58	20.63	33.74		
	18.15	6CD100T18					373.31	173.86	27.05	45.20		

DOUBLE ACTING CYLINDER DIMENSIONS

Product Code	Plunger Dia.	Saddle Dia.	Base to Adv. Port	Top to Return Port	Plunger Internal Thread	Plunger Thread Length	Collar Thread	Collar Thread Length	Base Mounting Hole			Weight (lbs)
									Bolt Circle	Thread	Thread Depth	
	E (in)	F (in)	G (in)	H (in)	J (in)	K (in)	L (in)	M (in)	X (in)	Y (in)	Z (in)	
6CD10T10	1.37	1.38	1.42	2.09	1 - 8	0.98	2¼ - 14	1.02	N/A			26.7
6CD10T12												30.0
6CD30T08	2.13	1.97	1.65	2.91	1½ - 16	0.98	3 5⁄16 - 12	1.93	N/A			43.0
6CD30T15												60.6
6CD55T06	3.14	2.76	1.14	2.87	1 - 12	0.98	5 - 12	1.73	N/A			70.5
6CD55T13												104.0
6CD55T20			2.48									146.2
6CD75T06	3.75	2.76	1.18	2.80	1 - 12	1.50	5¾ - 12	1.50	N/A			93.7
6CD75T13												136.8
6CD100T06	3.75	2.95	1.22	2.95	1¾ - 12	1.38	6 ⅛ - 12	1.97	5.47	¾ - 10	0.98	138.6
6CD100T13												193.6
6CD100T18			1.50									248.3

6CN55T12

WILLIAMS®

LOCK NUT CYLINDERS

- Single acting cylinder with mechanical safety lock nut
- Designed to support load for extended periods without hydraulic pressure.
- Overflow port prevents cylinders from over travel
- Load return
- Solid steel cylinder body
- Ideal for lifting and holding loads
- Maximum working pressure: 10,000 psi / 700 bar

LOCK NUT CYLINDERS SPECIFICATIONS

Cylinder Capacity	Stroke	Product Code	Cylinder Effective Area	Oil Capacity	Collapsed Height	Extended Height	Cylinder Bore Diameter	Outside Diameter	Plunger Outside Thread
(tons)	(in)		(in^2)	(in^3)	A (in)	B (in)	C (in)	D (in)	E
55	1.97	6CN55T02	10.99	21.65	6.5	8.4	3.7	4.9	Tw95-6N
	3.94	6CN55T04		43.27	8.4	12.4			
	5.91	6CN55T06		64.90	10.4	16.3			
	7.87	6CN55T08		86.54	12.4	20.2			
	9.84	6CN55T10		108.17	14.3	24.2			
	11.81	6CN55T12		129.80	16.3	28.1			
100	1.97	6CN100T02	20.57	40.49	7.4	9.3	5.1	6.5	Tw130-4N
	3.94	6CN100T04		80.98	9.3	13.3			
	5.91	6CN100T06		121.48	11.3	17.2			
	7.87	6CD100T08		161.97	13.3	21.1			
	9.84	6CN100T10		202.46	15.2	25.1			
	11.81	6CN100T12		242.95	17.2	29.0			

LOCK NUT CYLINDERS DIMENSIONS

Product Code	Saddle Diameter	Depth of Plunger Hole	Saddle Protrusion from Plunger	Lock Nut Length	Base to Inlet Port	Weight (lbs)
	F (in)	G1 (in)	G2 (in)	H (in)	I (in)	
6CN55T02	2.8	0.08	0.51	1.4	1.1	34.0
6CN55T04						44.5
6CN55T06						55.1
6CN55T08						65.9
6CN55T10						76.5
6CN55T12						87.1
6CN100T02				1.8		67.2
6CN100T04						85.8
6CN100T06						104.3
6CD100T08						122.6
6CN100T10						141.1
6CN100T12						159.6

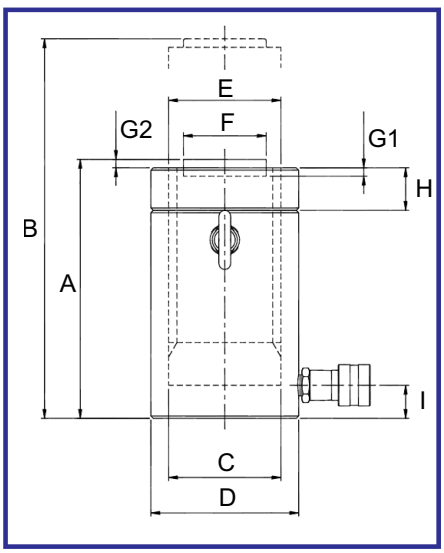

WILLIAMS®

ALUMINUM CYLINDERS

- Lightweight aluminum alloy construction
- Up to 60 percent lighter than comparable tonnage steel rams
- Convenient carry handle
- Hard anodized aluminum piston rod provides extra protection against corrosion and wear
- Maximum working pressure: 10,000 psi / 700 bar

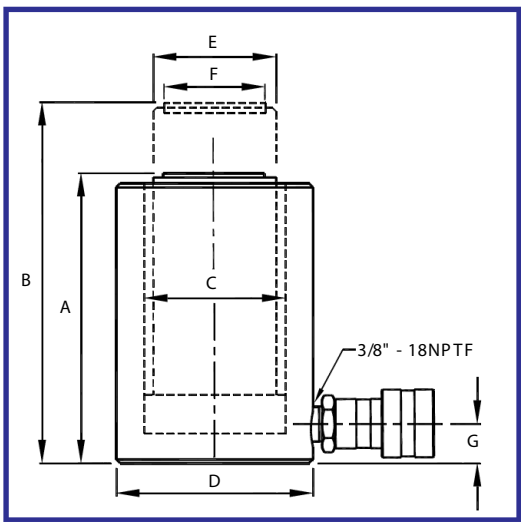

6CA30T06

ALUMINUM CYLINDER DIMENSIONS

Cylinder Capacity	Stroke	Product Code	Cylinder Effective Area	Internal Pressure at Capacity	Oil Capacity	Collapsed Height	Extended Height	Cylinder Bore Dia.	Outside Dia.	Plunger Dia.	Saddle Dia.	Base to Inlet Port	Weight
(tons)	(in)		(in^2)	(psi)	(in^3)	A (in)	B (in)	C (in)	D (in)	E (in)	F (in)	G (in)	(lbs)
30	2.00	6CA30T02	6.50	9,231	13.00	6.50	8.50	2.90	4.50	2.50	2.00	1.5	11.0
	4.00	6CA30T04			26.00	8.50	12.50						14.0
	6.00	6CA30T06			39.00	10.50	16.50						17.0
50	2.00	6CA50T02	11.00	9,091	22.00	6.50	8.50	3.70	5.50	3.10	2.50		17.0
	4.00	6CA50T04			44.00	8.50	12.50						21.0
	6.00	6CA50T06			66.00	10.50	16.50						25.0
	10.00	6CA50T10			110.00	14.50	24.50						34.0
75	4.00	6CA75T04	15.00	10,000	60.00	8.50	12.50	4.40	6.50	3.90	3.00		29.0
	6.00	6CA75T06			90.00	10.50	16.50						35.0
100	2.00	6CA100T02	20.70	9,662	41.40	6.50	8.50	5.10	8.00	4.30	3.50		36.0
	4.00	6CA100T04			82.80	8.50	12.50						43.0
	6.00	6CA100T06			124.40	10.50	16.50						51.0
	10.00	6CA100T10			207.0	14.50	24.50						68.0

6CF05T03

6CF10T05

6CF10T05

6CF20T05

WILLIAMS

FLAT BODY CYLINDERS

- Made of high quality steel
- Extremely low collapsed height for applications with minimal clearance at the lift point
- Great for areas of low clearance
- Maximum working pressure 10,000 psi / 700 bar

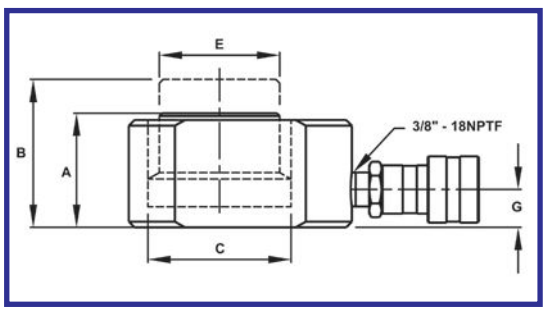

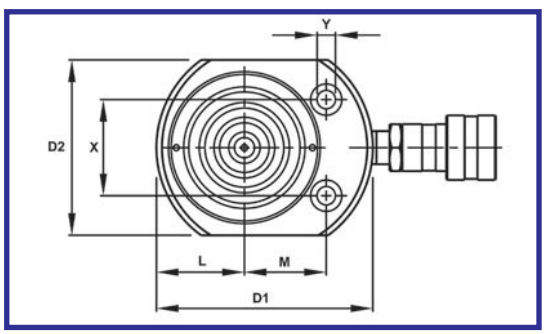

FLAT BODY CYLINDER DIMENSIONS

Cylinder Mounting Hole Dimensions (in)				
Product Code	Hole Pitch	Hole Dia	Counter Bore Dia.	Counter Bore Depth
	X (in)	Y (in)	(in)	(in)
6CF05T03	1.12	0.2	0.31	0.17
6CF10T05	1.44	0.28	0.42	0.31
6CF20T05	1.94	0.4	0.59	0.39
6CF30T05	2.06	0.4	0.62	0.44

FLAT BODY CYLINDER DIMENSIONS

Cylinder Capacity	Stroke	Product Code	Cylinder Effective Area	Pressure at Capacity	Oil Capacity	Collapsed Height	Extended Height	Outside Dim. D1 x D2	Cylinder Bore Dia.	Plunger Dia.	Base to Port	Plunger to Base	Plunger to Mtg. Hole
(tons)	(in)		(in^2)	(psi)	(in^3)	A (in)	B (in)	(in)	C (in)	E (in)	G (in)	L (in)	M (in)
5	0.24	6CF05T03	1.10	9,090	0.26	1.26	1.5	2.4 x 1.6	1.18	0.98	0.69	0.80	0.87
10	0.43	6CF10T05	2.36	8,470	1.01	1.69	2.12	3.3 x 2.2	1.73	1.50	0.77	1.12	1.32
20	0.43	6CF20T05	4.38	9,130	1.88	2.01	2.44	4.0 x 3.0	2.36	2.00	0.75	1.54	1.56
30	0.51	6CF30T05	6.49	9,240	3.31	2.31	2.82	4.6 x 3.8	2.87	2.50	0.79	1.88	1.75

WILLIAMS®

FLAT BODY CYLINDER KITS

- Various height magnetic adapters
- Perfect for low clearance areas needing a cylinder height boost
- Maximum working pressure: 10,000 psi / 700 bar
- Kits include magnetic adapters and carrying case

Flat Body Kit Spacers

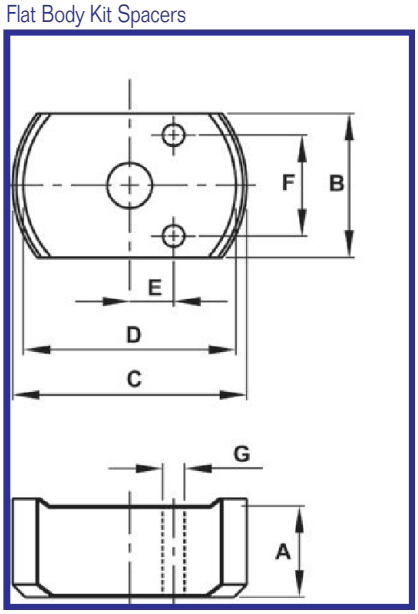

6CF05T03TB

FLAT BODY CYLINDER KIT DIMENSIONS

Cylinder Capacity (tons)	Stroke (in)	Product Code	Cylinder Model	Oil Capacity (in^3)	Collapsed Height (in)	Includes Adapter	Adapter Dimensions (in) A	B	C	D	E	F	G
5	0.24	6CF05T03TB	6CF05T03	0.26	1.26	I	0.25	1.61	2.56	2.32	0.48	1.10	0.24
						II	0.5						
						III	1						
						IV	1.25						
10	0.43	6CF10T05TB	6CF10T05	1.02	1.69	I	0.39	2.20	3.54	3.23	0.81	1.46	0.28
						II	0.79				N/A		
						III	1.57						
20	0.43	6CF20T05TB	6CF20T05	1.90	2.01	I	0.39	2.99	4.25	3.94	1.08	1.93	0.39
						II	0.79				N/A		
						III	1.57						
30	0.51	6CF30T05TB	6CF30T05	3.32	2.31	I	0.39	3.75	4.76	4.45	1.32	2.06	0.39
						II	0.79				N/A		
						III	1.57						

6CH30T06

WILLIAMS

HOLLOW HOLE CYLINDERS

- 6 standard models
- Ideal for some pulling and pushing applications
- Heavy duty compression spring
- Dual wipers help prevent contamination
- Collar thread protector
- High flow coupler with dust cap

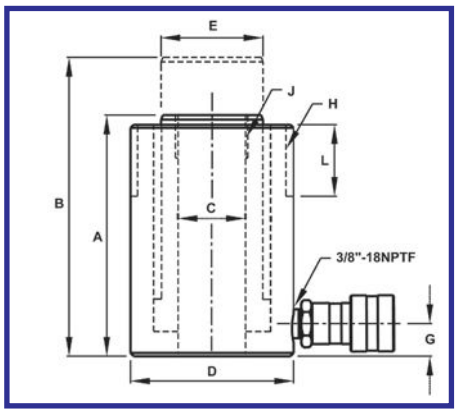

HOLLOW HOLE CYLINDER DIMENSIONS

Cylinder Capacity	Stroke	Product Code	Cylinder Effective Area	Pressure at Capacity	Oil Cap.	Min. Height	Max. Height	O.D.	Plunger			Internal Thread Length
									I.D.	O.D.	Internal Thread	
(tons)	(in)		(in^2)	(psi)	(in^3)	A (in)	B (in)	D (in)	C (in)	E (in)	J (in)	K (in)
20	2.01	6CH20T02	4.90	8,167	9.83	6.38	8.39	3.92	1.063	2.15	1 5/16"-16UN	0.75
	6.06	6CH20T06			29.70	12.05	18.11					
30	2.52	6CH30T02	6.32	9,488	15.93	7.05	9.57	4.50	1.311	2.48	1 13/16"-16UN	0.87
	6.11	6CH30T06			38.67	13.02	19.13					
60	3.00	6CH60T03	13.05	9,195	39.10	9.77	12.77	6.252	2.126	3.66	2 3/4"-16UN	0.75
100	3.00	6CH100T03	22.13	9,036	66.31	10.00	13.00	8.386	3.110	4.92	4"-16UN	0.98

HOLLOW HOLE CYLINDER SPECIFICATIONS

Product Code	Collar Thread		Base to Inlet Port	Base Mounting Hole			Weights
	Dia.	Lgth.		Bolt Circle	Thread	Thread Depth	
	H (in)	L (in)	G (in)	X (in)	Y (in)	Z (in)	(lbs)
6CH20T02	3 1/8-12	1.50	0.75	3.25	3/8"-16UNC	0.37	15.9
6CH20T06							29.5
6CH30T02	4 1/2-12	1.75	0.81		3/8"-16UNC	0.55	22.9
6CH30T06							43.0
6CH60T03	6 1/4-12	2	1.00		1/2"-13UNC	0.55	65.7
							81.1
6CH100T03	6 3/8-12	2.38	1.06	7.01	5/8"-11UNC	0.75	113.3

WILLIAMS®

PULL CYLINDERS

- High strength steel construction
- One piece high grade alloy bearing for side load protection and longer life
- Polyurethane cup seal helps provide optimum performance
- External plunger threads
- Internal base threads
- Used for pulling and tensioning
- Maximum working pressure: 10,000 psi / 700 bar

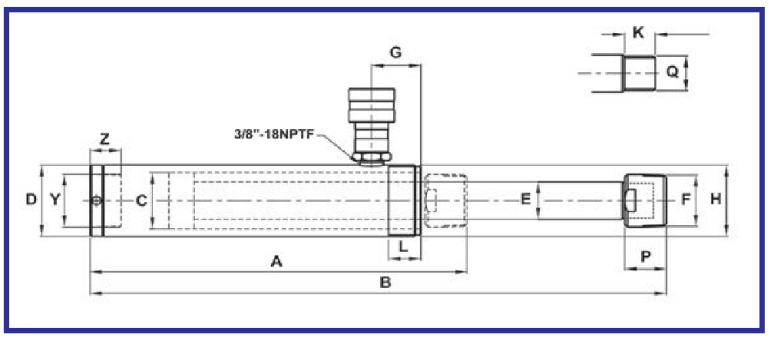

6CPO2T05

PULL CYLINDER DIMENSIONS

Cylinder Capacity	Stroke	Product Code	Cylinder Effective Area	Pressure at Capacity	Oil Capacity	Collapsed Height	Extended Height	Outside Dia.	Cylinder Bore Dia.	Top to Inlet Port	Collar	
											Thread	Thread Length
(tons)	(in)		(in^2)	(psi)	(in^3)	A (in)	B (in)	D (in)	C (in)	G (in)	H (in)	L (in)
2.5	5.00	6CP02T05	0.56	8,930	2.78	10.55	15.55	1.89	1.13	1.65	1 ½"-16	0.98
5	5.55	6CP05T05	1.14	8,770	6.34	11.85	17.35	2.25	1.69	1.50	2 ¼"-14	1
10	5.95	6CP10T06	2.44	8,200	14.48	11.75	17.7	3.35	2.17	1.50	M85x2	1

Product Code	Adapter		Plunger			Base Mounting Hole	
	Thread	Length	Dia.	Thread Length	Thread	Thread	Depth
	F (in)	P (in)	E (in)	K (in)	Q (mm)	H	Z (in)
6CP02T05	¾"-14NPTF	1.13	0.75	0.76	M16x1.5	¾"-14NPTF	0.72
6CP05T05	1 ¼"-11.5NPTF	1.25	1.18	0.93	M28x1.5	1 ¼"-11.5NPTF	0.95
6CP10T06	-	-	1.26	1.02	M30x2	M30x2	0.98

6C10T06

6C10T10

WILLIAMS®

THREADED HOLE CYLINDERS

- High quality threaded single acting cylinders
- Removable threaded plunger adapter allows for the use of a variety of threaded attachments
- Used to attach accessories to rod end and base
- Maximum working pressure: 10,000 psi / 700 bar

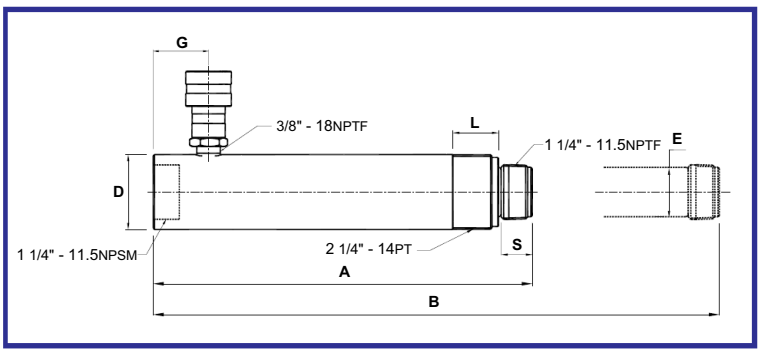

THREADED HOLE CYLINDER DIMENSIONS

Cylinder Capacity	Stroke	Product Code	Cylinder Effective Area	Pressure at Capacity	Oil Capacity	Collapsed Height	Extended Height	Outside Dia.	Plunger Dia.	Base to Inlet Port	Collar Thread Length	Saddle Height
(tons)	(in)		(in^2)	(psi)	(in^3)	A (in)	B (in)	D (in)	E (in)	G (in)	L (in)	S (in)
10	5.95	6CT10T06	2.24	8,930	13.33	11.46	17.41	2.26	1.49	1.67	1.13	0.94
10	9.96	6CT10T10			22.31	15.47	25.43					

WILLIAMS

LOW PROFILE CYLINDERS

- Compact design for use in confined spaces
- Rod wiper helps seal out dirt and contamination
- Specially designed return spring ensures a quick retraction and extends the life of the spring
- Industrial hard chrome plated ram helps prevent scratching and corrosion
- Plunger end is grooved to reduce load slippage
- Includes high flow ball coupler and dust cap
- Coupler is tilted upward for added clearance
- Maximum working pressure: 10,000 psi/700 bar

6CL20T02

6CL30T02

6CL10T01

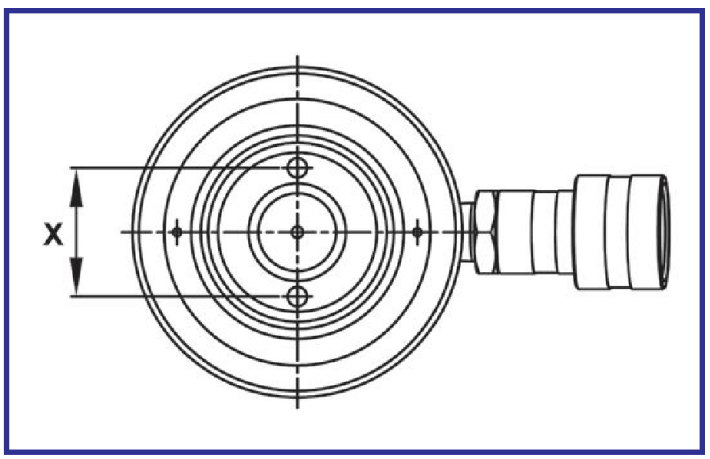

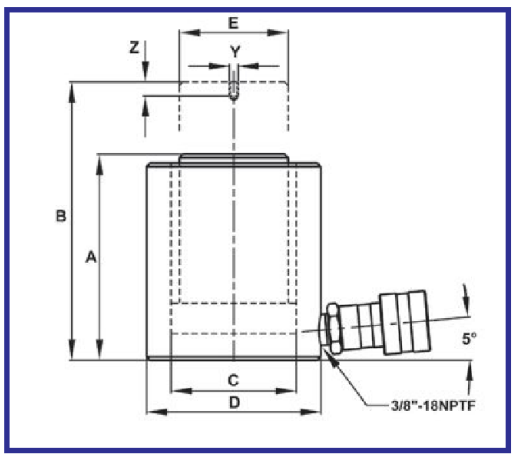

LOW PROFILE CYLINDER DIMENSIONS

Cylinder Capacity	Stroke	Product Code	Cylinder Effective Area	Internal Pressure at Capacity	Oil Capacity	Collapsed Height	Extended Height	Outside Dia.	Cylinder Bore Dia.	Plunger Dia.	Plunger Mounting		
						A	B	D	C	E	Bolt Circle X	Thread Y	Thread Depth Z
(tons)	(in)		(in^2)	(psi)	(in^3)	(in)	(in)	(in)	(in)	(in)	(in)	(mm)	(in)
10	1.50	6CL10T01	2.35	8,511	3.53	3.48	4.98	2.75	1.73	1.50	1.03	M4	0.32
20	1.75	6CL20T02	4.37	9,153	7.65	3.90	5.65	3.63	2.36	2.00	1.56	M4	0.32
30	2.44	6CL30T02	6.49	9,245	15.84	4.61	7.05	4.00	2.87	2.50	1.56	M5	0.32

WILLIAMS®

HAND PUMPS

- 5HS2S35, 5HS2S100 and 5HS2S200 feature 2 speed operation
- Pressure relief valve for overload protection
- Load release valve for single acting cylinder usage
- Large oil capacities to power a wide range of cylinders and tools
- 5HS2S35 and 5HS2S100 are constructed of high strength lightweight aluminum alloy for easy handling and corrosion resistance
- All hand pumps function in horizontal positions and will also function in some vertical positions
- Maximum working pressure: 10,000 psi / 700 bar

5HS1S60

5HS2S35

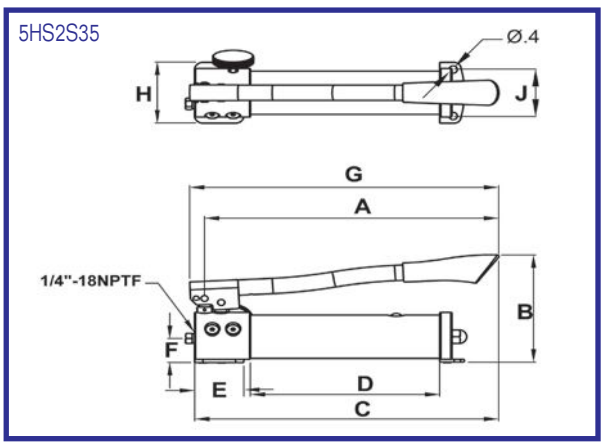

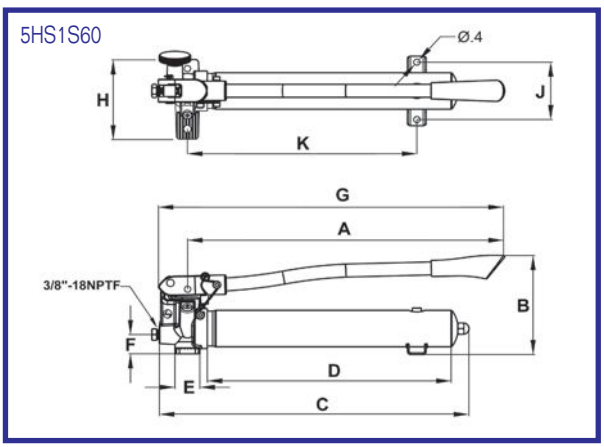

HAND PUMP SPECIFICATIONS

Used with Cylinder	Pump Type	Usable Oil Capacity (in³)	Product Code	Pressure Rating (psi)		Oil Displacement per Stroke (in³)		Max. Operating Force (lbs)	Piston Stroke (in)	Oil Outlet Port
				1st Stage	2nd Stage	1st Stage	2nd Stage			
Single Acting	Single-speed	36.5	5HS1S60		10,000		0.15	109	0.79	3/8"-18NPTF
	Two-speed	21.4	5HS2S35	200		0.18	0.05	88	0.38	1/4"-18NPTF
		61.0	5HS2S100			0.81	0.14	132	0.82	3/8"-18NPTF
		128.0	5HS2S200							

WILLIAMS

HAND PUMPS

5HS2S100

5HS2S200

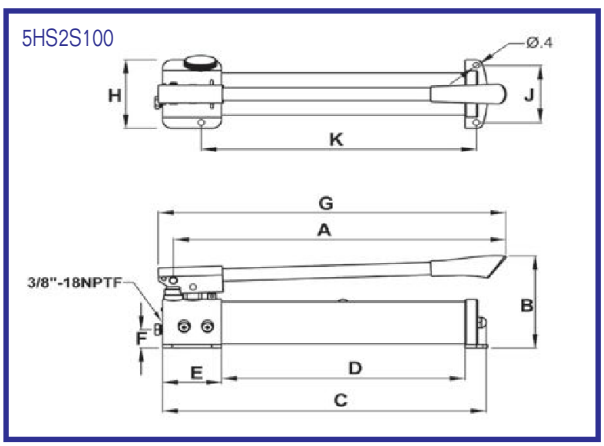

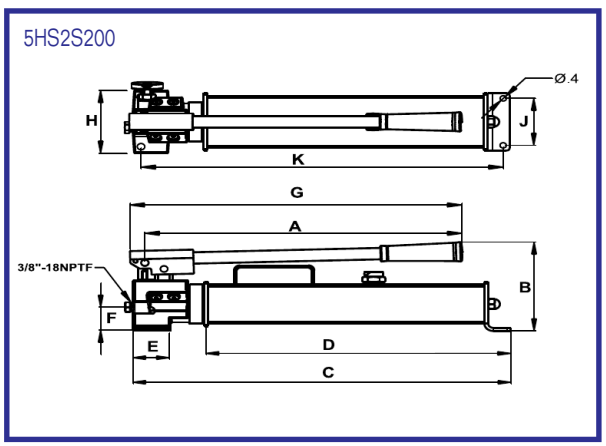

HAND PUMP DIMENSIONS

Product Code	Dimensions (in)									
	A	B	C	D	E	F	G	H	J	K
5HS1S60	18.94	6.46	19.53	15.35	1.57	1.26	20.79	5.20	3.74	14.45
5HS2S35	13.43	5.91	13.89	9.09	2.36	1.34	14.13	3.35	2.56	-
5HS2S100	19.69	6.38	19.88	14.96	3.62	1.26	20.63	4.72	3.94	16.93
5HS2S200	19.75	6.64	23.69	18.37	2.36	1.73	20.71	4.72	3.54	22.56

5HD2S500

WILLIAMS®

DOUBLE ACTING HAND PUMPS

- A 4-way control valve for operation of double acting cylinders
- Large oil capacities to power a wide range of cylinders and tools
- Two speed operation increases productivity and reduces user fatigue

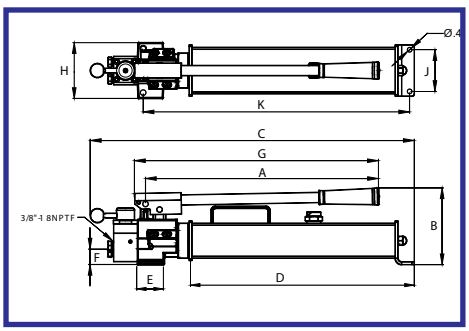

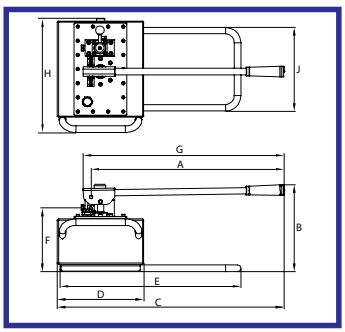

DOUBLE ACTING HAND PUMP SPECIFICATIONS

Used with Cylinder	Pump Type	Usable Oil Capacity	Product Code	Pressure Rating		Oil Displacement per Stroke		Max. Operating Force	Piston Stroke	Oil Outlet Port	Weight
				1st Stage (psi)	2nd Stage (psi)	1st Stage (in^3)	2nd Stage (in^3)	(lbs)	(in)		(lbs)
Double Acting	Two Speed	128.0	5HD2S100	200	10,000	0.81	0.14	132	0.82	3.8"-18NPTF	32.2
		476.0	5HD2S500	290		7.31	0.29	143	1.67		77.4

DOUBLE ACTING HAND PUMP DIMENSIONS

Product Code	Dimensions (in)									
	A	B	C	D	E	F	G	H	J	K
5HD2S100	19.75	6.64	23.69	18.37	2.36	1.73	20.71	4.72	3.54	22.56
5HD2S500	25.79	11.61	30.35	11.54	24.17	8.25	26.94	15.24	11.18	-

WILLIAMS®

AIR PUMPS

- High strength reinforced aluminum alloy reservoir is lightweight and corrosion resistant
- Pressure relief valve for overload protection
- Suggested air pressure range: 90-175 psi / 6-12 bar
- Designed to be used with single acting cylinders
- Dust cover protection for the release control valve
- Dual stage release control valve
- 5AS200 offers a turbo function that features high flow at high pressure condition
- 5AD150M offers a 4-way control valve for operation of double acting cylinders
- Maximum working pressure: 10,000 psi / 700 bar

5AD150M

5AS150L

5AS200

AIR PUMP SPECIFICATIONS

Used with Cylinder	Usable Oil Capacity	Product Code	Pressure Rating	Oil Output Flow Rate		Input Air Pressure Range	Dimensions (in)				
				(in³/min)			A	B	C	D	E
	(in³)		(psi)	No Load	Load	(psi)					
Single Acting	36.6	5AS60	10,000	61	9	100-200	16.54	9.84	7.01	6.18	5.59
	91.5	5AS150		66	11		10.35	5.00	7.28	5.16	5.35
	122.1	5AS200		65	12		11.57	6.02	7.91	6.18	5.98
	231.9	5AS380		65	11		12.64	5.08	7.36	5.24	7.36
	91.5	5AS150L		61	10		10.98	6.30	8.03	5.12	5.35
	231.9	5AS380L		61	10		12.64	6.42	8.15	5.20	7.36
Double Acting	91.5	5AD150M	10,000	66	11	100-200	10.35	5.00	7.99	5.35	5.35

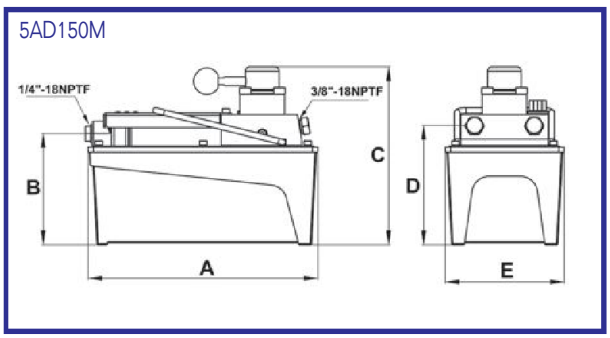

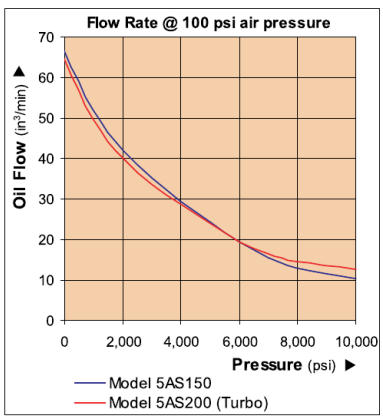

5AS60

5AS150

5AS380L

5AS60

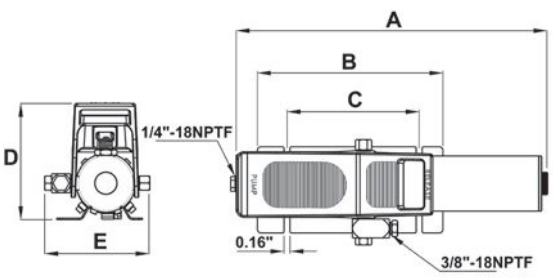

5AS150L & 5AS380L

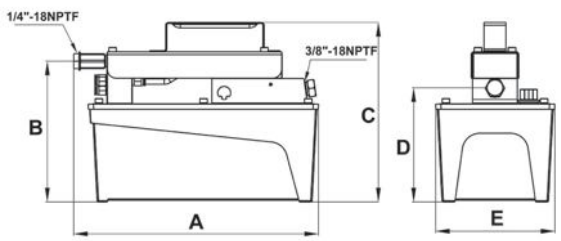

5AS150 & 5AS380

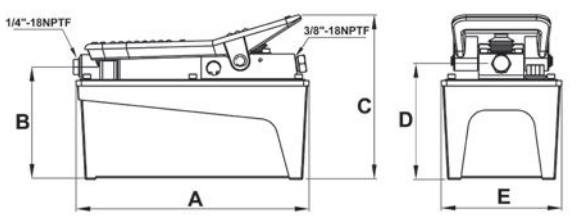

5AS200

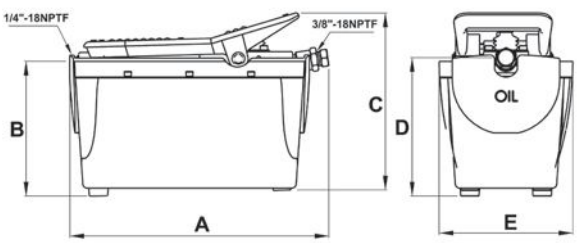

WILLIAMS®

ELECTRIC PUMPS

- Quiet operation meets OSHA regulations (80dBA)
- 2 speed operation allows for faster cylinder advance
- Full load starting capacities
- Internal filter keeps contamination from damaging pump
- Rugged durable design meets the demands of industrial applications
- Precision components to minimize wear and improve overall dependability
- Designed to minimize the number of moving parts and maximize overall pump efficiency
- Ideal for on site construction as well as maintenance

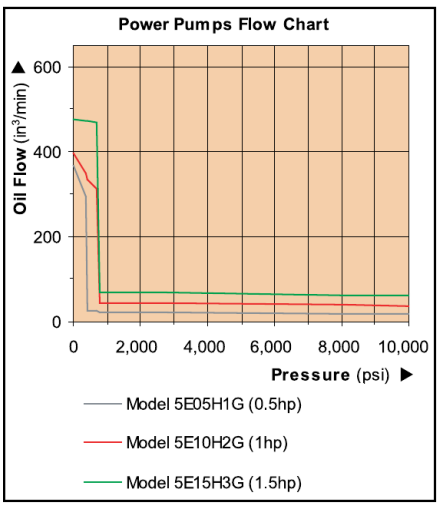

5E10H2GR

5E0SH1G

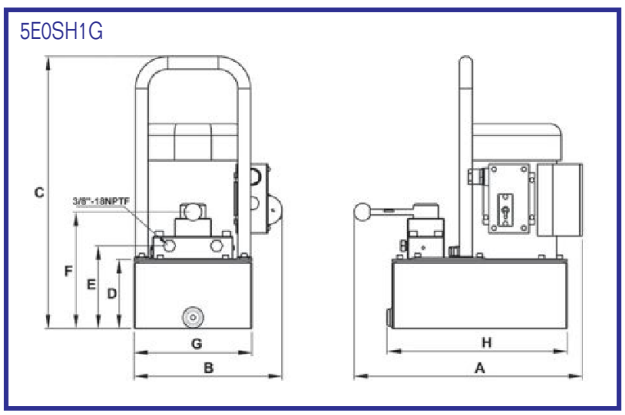

5E10H2G & 5E15H3G

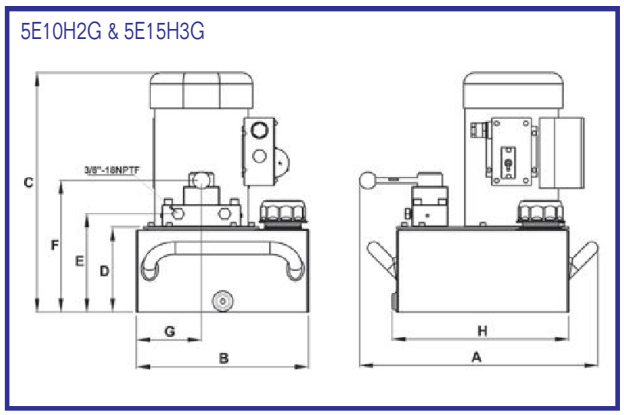

5E0SH1G

5E10H2G

ELECTRIC PUMP DIMENSIONS

Product Code	Dimensions (in)							
	A	B	C	D	E	F	G	H
5E05H1G	15.43	10.28	19.09	4.72	5.67	7.99	8.07	12.36
5E10H2G	16.65	12.01	17.83	5.94	6.89	9.21	4.53	12.36
5E15H3G	16.65	12.01	19.72	7.24	8.19	10.51	4.53	12.36

ELECTRIC PUMP SPECIFICATIONS

Motor Size	Usable Oil Capacity	Product Code	Product Code with Remote Control Pendant Switch	Max. Output Pressure	Oil Output Flow Rate		Valve Type	Valve Function	Current Draw	Motor Voltage	Sound Level
					1st Stage	2nd Stage					
(hp)	(gal)			(psi)	(in^3)				(amps)	(volts)	(dBA)
0.5	1.0	5E05H1G	5E05H1GR	10,000	293	18	4-way, 3-pos.	Advance Hold Return	8	115	80
1.0	2.0	5E10H2G	5E10H2GR		311	37			15		
1.5	3.0	5E15H3G	5E15H3GR		470	61			17		

WILLIAMS

ELECTRIC PUMPS WITH SOLENOID VALVE

- Quiet operation meets OSHA regulations (80dBA)
- Ideal for applications where a remote control is required
- 2 speed operations allows for faster cylinder advance
- Full load starting capabilities
- Internal filter keeps contamination from damaging pump
- 10 foot hand held remote controls the solenoid valve

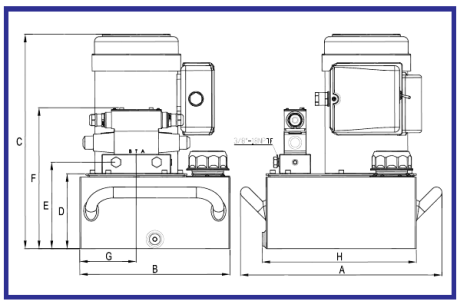

ELECTRIC PUMP WITH SOLENOID VALVE SPECIFICATIONS

Used with Cylinder	Motor Size (hp)	Usable Oil Capacity (gal)	Product Code	Pressure Rating 1st Stage (psi)	Pressure Rating 2nd Stage (psi)	Oil Output Flow Rate 1st Stage (in³/min)	Oil Output Flow Rate 2nd Stage (in³/min)	Valve Type	Valve Function	Current Draw (amps)	Motor Voltage (volts)	Weight (lbs)
Single Acting	0.5	1	5ES05H1G	350	10,000	293	18	3-way, 3-position	Advance/ Hold/ Return	9	115	61.5
		2	5ES05H2G									65.3
	1	2	5ES10H2G	700		311	37			12		72.6
	1.5	3	5ES15H3G			470	61			17		90.4
		5	5ES15H5G									98
Double Acting	0.5	1	5ES05H1GR	350		293	18	4-way, 3-position		9		61.5
		2	5ES05H2GR									65.3
	1	2	5ES10H2GR	700		311	37			12		72.6
	1.5	3	5ES15H3GR			470	61			17		72.6
		5	5ES15H5GR									98

ELECTRIC PUMP WITH SOLENOID VALVE DIMENSIONS

Product Code	Dimensions (in) A	B	C	D	E	F	G	H
5ES05H1G	12.74	10.26	19.10	4.72	5.65	10.00	8.07	12.32
5ES05H2G	12.74	10.26	19.10	4.72	5.65	10.00	8.07	12.32
5ES10H2G	17.88	12.01	17.88	5.98	6.90	11.26	4.51	12.32
5ES15H3G	17.88	12.01	17.88	5.98	6.90	11.26	4.51	12.32
5ES15H5G	16.10	12.01	17.13	5.98	6.90	11.26	4.51	12.32
5ES05H1GR	16.10	12.01	17.13	5.98	6.90	11.26	4.51	12.32
5ES05H2GR	16.10	12.01	19.78	7.28	8.20	12.56	4.51	12.32
5ES10H2GR	16.10	12.01	19.78	7.28	8.20	12.56	4.51	12.32
5ES15H3GR	16.10	12.01	24.78	12.28	13.20	17.56	4.51	12.32
5ES15H5GR	16.10	12.01	24.78	12.28	13.20	17.56	4.51	12.32

5EA05HIG

WILLIAMS

ELECTRIC PUMP WITH AUTO RETURN VALVE

- Quiet operation meets OSHA regulations (80dBA)
- Best suited for punching, crimping and cutting applications
- 2 speed operation allows for faster cylinder advance
- Full load starting capabilities
- Internal filter keeps contamination from damaging pump
- Rugged durable design meets the demands of industrial applications
- 10 ft. remote pendant switch to control motor on/off

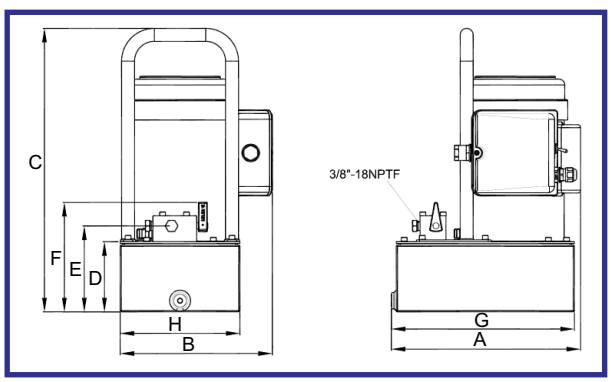

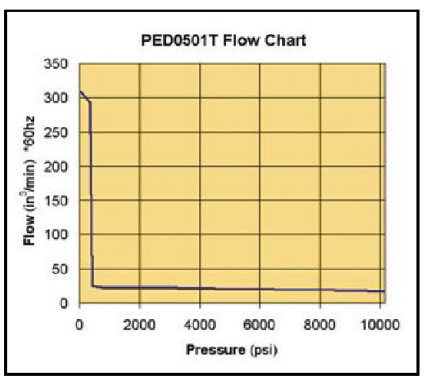

ELECTRIC PUMP WITH AUTO RETURN VALVE SPECIFICATIONS

Motor Size	Usable Oil Capacity	Product Code	Pressure Rating		Oil Output Flow Rate		Valve Type	Valve Function	Current Draw	Motor Voltage	Sound Level	Weight
			1st Stage	2nd Stage	1st Stage	2nd Stage						
(hp)	(gal)		(psi)		(in^3/min)				(amps)	(volts)	(dBA)	(lbs)
0.5	1.0	5EA05HIG	350	10,000	233	18	2-way, 2-position	*Advance/ Return	9	115	80	66.2

* Holds pressure in advance position when motor is off.

ELECTRIC PUMP WITH AUTO RETURN VALVE DIMENSIONS

Product Code	Dimensions (in)						
	A	B	C	D	E	F	G
5EA05HIG	12.76	10.28	19.09	4.72	5.79	7.36	12.36

WILLIAMS®

ELECTRIC PUMPS WITH PENDANT SWITCH

- Quiet operation meets OSHA regulations (80dBA)
- 2 speed operation allows for faster cylinder advance
- Full load starting capacities
- Internal filter keeps contamination from damaging pump
- 10 foot hand held remote control allows user to control cylinder in up or down position

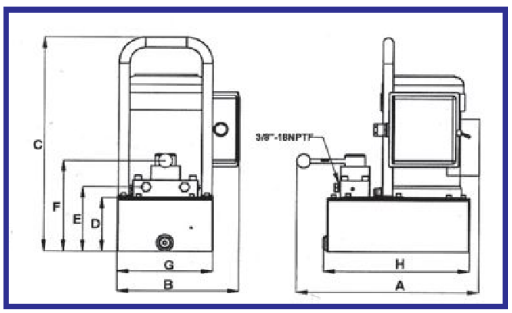

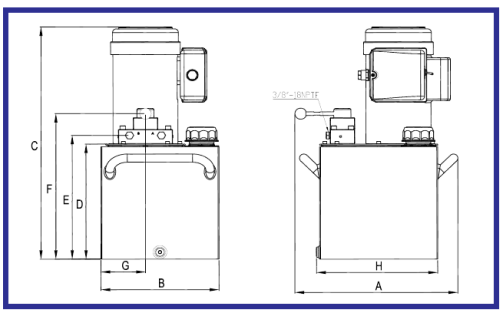

ELECTRIC PUMP WITH SOLENOID VALVE SPECIFICATIONS

Used with Cylinder	Motor Size (hp)	Usable Oil Capacity (gal)	Product Code	Pressure Rating 1st Stage (psi)	Pressure Rating 2nd Stage (psi)	Oil Output Flow Rate 1st Stage (in³/min)	Oil Output Flow Rate 2nd Stage (in³/min)	Valve Type	Valve Function	Current Draw (amps)	Motor Voltage (volts)	Weight (lbs)
Single Acting	0.5	1.0	5E05H1GR	350	10,000	293	18	3-way, 3-position	Advance/ Hold/ Return	9	115	59.5
	1.0	2.0	5E10H2GR	700		397	37			12		70.5
	1.5	3.0	5E15H3GR			476	61			17		88.5

ELECTRIC PUMP WITH SOLENOID VALVE DIMENSIONS

Product Code	Dimensions (in)							
	A	B	C	D	E	F	G	H
5E05H1GR	14.92	10.28	19.10	4.72	5.67	7.99	8.07	12.36
5E10H2GR	16.65	12.01	17.83	5.94	6.89	9.21	4.53	12.36
5E15H3GR	16.65	12.01	19.72	7.24	8.19	10.51	4.53	12.36

5G65H5G

WILLIAMS®

GAS ENGINE PUMP

- Gas pump will provide 10,000 psi hydraulic force at remote locations
- Industrial grade 5.5 hp Honda gas engine
- Manual control valve for use with single or double acting cylinders or tools
- Two speed pump designed for rapid cylinder advance
- Gas pump features a sturdy protective roll cage for use in the toughest environments

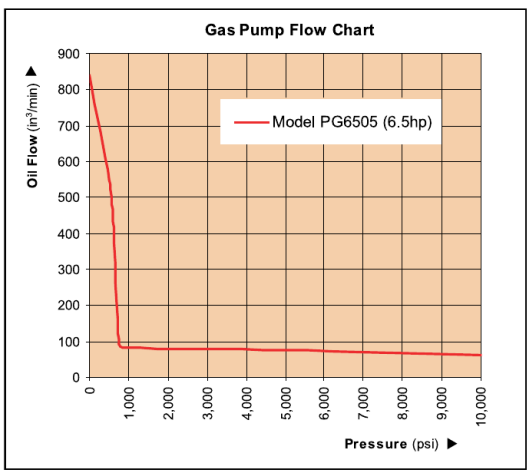

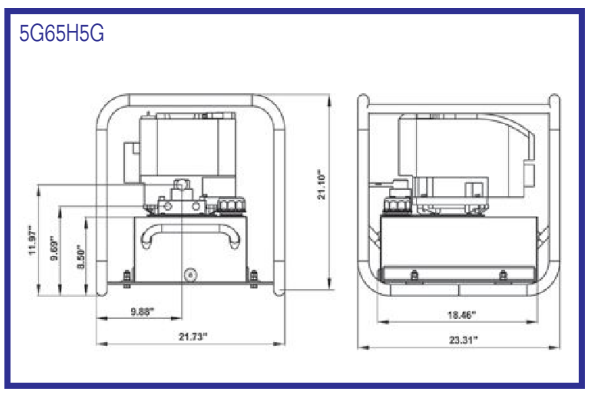

ENGINE PUMP SPECIFICATIONS

Motor Size	Usable Oil Capacity	Product Code	Pressure Rating (psi)		Oil Output Flow Rate (in^3)		Valve Type	Valve Function	Rotation Speed	Sound Level
(hp)	(gal)		1st Stage	2nd Stage	1st Stage	2nd Stage			(rpm)	(dBA)
5.5	5.0	5G65H5G	580	10,000	610	67	Manual	4-way, 3-position	3600	95

WILLIAMS

PUMP & CYLINDER COMBOS

Matched sets provide a combination of components for single acting cylinder applications. Ordering is as easy as 1, 2, 3.

1. Select the cylinder you want
2. Select the pump you want
3. Choose the set number

1HP25T06

PUMP & CYLINDER COMBINATIONS

Type	Combo Capacity	Cylinder			Combo Model Number					
		Product Code	Stroke	Collapsed Height	with Hand Pump			with Air Pump		
	(tons)		(in)	(in)	5HS2S35	5HS2S100	5HS2S200	5AS150	5AS150L	5AS380
Single Acting Cylinders	5	6C05T05	5.08	8.70	1HP05T05					
	10	6C10T02	2.01	4.84		1HP10T02		1AP10T02		
		6C10T06	5.94	9.84		1HP10T06		1AP10T06	1AP10T06L	
		6C10T10	9.96	13.86		1HP10T10		1AP10T10	1AP10T10L	
		6CT10T06	5.95	11.46		1HP10T06T		1AP10T06T	1AP10T06TL	
		6CT10T10	9.96	15.47		1HP10T10T		1AP10T10T	1AP10T10TL	
	15	6C15T04	3.86	8.66		1HP15T04		1AP15T04		
		6C15T06	5.87	10.67		1HP15T06		1AP15T06		
	25	6C25T02	2.01	6.82		1HP25T02		1AP25T02		
		6C25T04	3.94	8.78		1HP25T04		1AP25T04		
		6C25T06	5.94	10.79		1HP25T06		1AP25T06		
		6C25T08	7.95	12.80			1HP25T08	1AP25T08		
	55	6C55T06	6.25	11.13			1HP55T06	1AP55T06		
	100	6C100T06	6.63	13.25						1AP100T06
Single Acting Low Profile Cylinder	10	6CL10T01	1.50	3.48	1HP10T01L			1AP10T01L		
	20	6CL20T02	1.75	3.90	1HP20T02L			1AP20T02L		
	30	6CL30T02	2.44	4.61		1HP30T02L		1AP30T02L		

Set includes cylinder, pump, 6-foot hydraulic hose, high flow coupler and fitting. Some kits include a 2 ½" gauge.

AIR PUMP AND SINGLE-ACTING CYLINDER MATCHING CHART

Capacity (Tons) ▶ Stroke (Inches) ▼	5	10	15	25	30	55	75	100
<1.00								
1.00								
2.00								
3.00								
4.00								
5.00								
6.00								
7.00								
8.00								
9.00								
10.00								
12.00								
13.00								
14.00								
	5AS60	5AS150				5AS380		

Note: Selection based on oil capacity requirements of cylinders. **Not Recommended**

HAND PUMP / E-PUMP AND SINGLE-ACTING CYLINDER MATCHING CHART

Capacity (Tons) ▶ Stroke (Inches) ▼	5	10	15	25	30	55	75	100
<1.00								
1.00								
2.00								
3.00								
4.00								
5.00								
6.00								
7.00								
8.00								
9.00								
10.00								
12.00								
13.00								
14.00								
	5HS2S35	5HS2S100		5HS2S200		5E10H2G		

Note: Selection based on oil capacity requirements of cylinders.

WILLIAMS®

55/100 TON SHOP PRESS

- Heavy steel welded construction
- Multi-position bed for work height adjustment
- Ideal for the removal or installation of gears, universal joints, pulleys, wrist pins, and other press jobs
- Excellent for bending, bonding or straightening applications

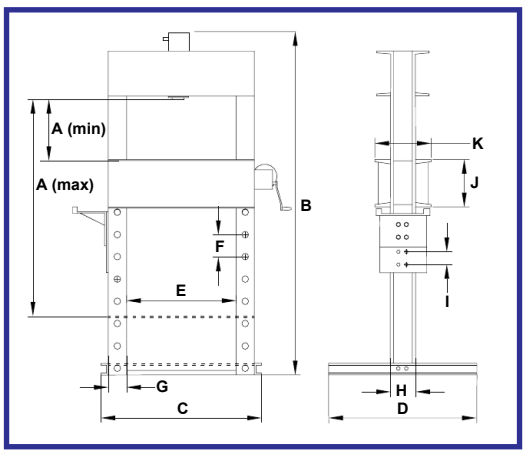

55/100 TON SHOP PRESS SPECIFICATIONS

Product Code	Capactiy (Tons)	Pump Model	Pump Type	Stroke Length	Bed Position	Product Size (H X L X W)	Working Space (A Min. / A Max.) (in)	Weight (lbs)
9A55T06	55	5AS150	AIR	6	9	79" X 56" X 30"	14" ~ 55-1/2"	760
9E55T06		5E05H1GR	ELECTRIC	6				
9H55T06		5HS25200	MANUAL	6				
9A55T13		5AS380	AIR	13				
9E55T13		5E05H1GR	ELECTRIC	13				
9E100T10	100	5E10H2GR	ELECTRIC	10	8	89" X 63" X 30"	11-1/4" ~ 51"	1550

55/100 TON SHOP PRESS DIMENSIONS

Product Code	Dimensions (in)											
	A (Min.)	A (Max.)	B	C	D	E	F	G	H	I	J	K
9A55T06	14	55.5	79	56	30	35.4	6	4	9	3	10	14.8
9E55T06												
9H55T06												
9A55T13												
9E55T13												
9E100T10	11.3	51	89	63	30	35.5	8	N/A	10	N/A	12	16

WILLIAMS®

TOE JACKS

- Heat treated and chrome plated medium-carbon steel cylinder
- Chrome plated ram promotes longer seal life and optimum performance
- U.S. Patented by-pass device protects hydraulic system from over traveling damage

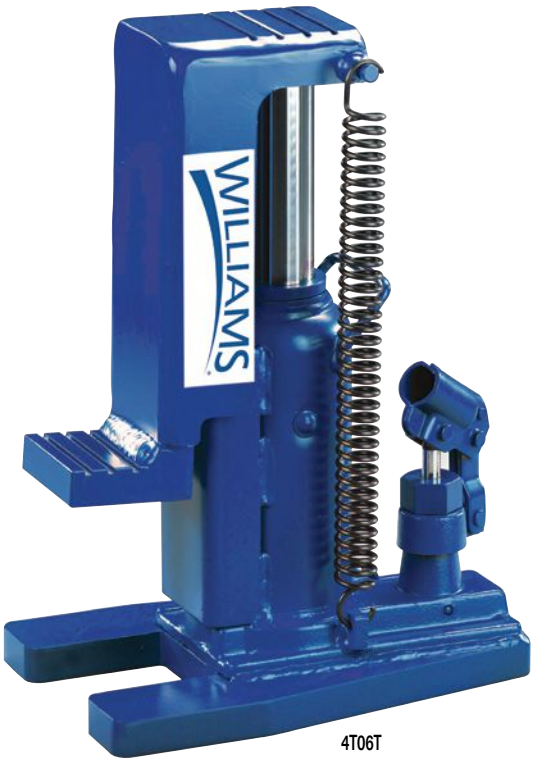

4T06T

4T10T

TOE JACK DIMENSIONS

Capacity	Product Code	Toe Saddle		Head Saddle		Hydraulic Lifting
		Min. Height	Max. Height	Min. Height	Max. Height	
(tons)		(in)	(in)	(in)	(in)	(in)
6	4T06T	0.88	6.00	10.50	15.63	5.13
10	4T10T	1.13	6.25	11.00	16.13	

WILLIAMS®

SPREADERS

6S.5T03

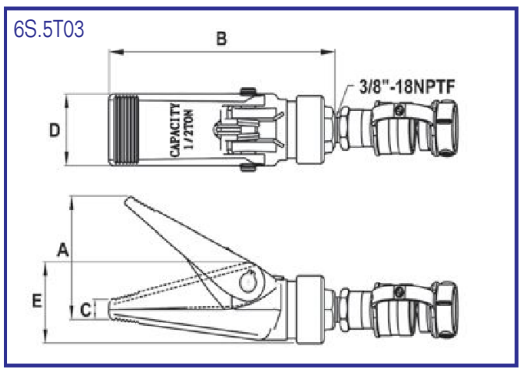

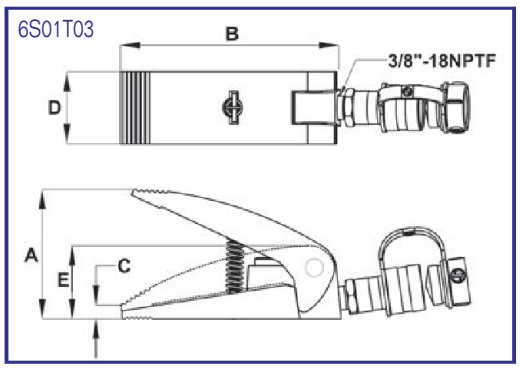

6S01T03

SPREADER DIMENSIONS

Cylinder Capacity	Product Code	Cylinder Effective Area	Oil Capacity	Dimensions (in)				
(tons)		(in^2)	(in^3)	A	B	C	D	E
0.5	6S05T03	1.22	0.58	3.54	7.57	0.51	2.05	2.36
1	6S01T03	1.09	0.86	3.90	6.57	0.47	2.17	2.20

3S12T

WILLIAMS

ORBITAL PUMP BOTTLE JACKS

- Textured, heat treated saddle provides lifting area with secure grip
- Heat treated extension screw allows height adjustment and maximum lift height
- U.S. patented by-pass device protects hydraulic system from over traveling damage
- Industrial hard chrome plated ram prevents scratching and corrosion
- A wide, rugged base provides stability and strength
- Critical stress points are reinforced in all models for added durability and dependability
- Fully serviceable design

3T20T

3T12T

ORBITAL PUMP BOTTLE JACK DIMENSIONS

Capacity	Product Code	Min. Height	Max. Height	Extension Screw	Hydraulic Lifting	Base Size (L x W)
(tons)		(in)	(in)	(in)	(in)	(in)
12	3T12T	9.50	18.63	3.13	6.00	7.50 x 4.63
	3S12T	6.13	10.63	1.63	3.00	
20	3T20T	9.63	18.75	3.88	5.13	7.50 x 5.38
	3S20T	6.50	11.25	2.00	2.75	

WILLIAMS

SIDE PUMP BOTTLE JACK

- Hydraulic system is protected from internal damage by a patented by-pass mechanism
- Machined and polished cylinders with die-cut threads provide non-abrasive leak-free, durable performance
- Fabricated from hard-cast steel with heat-treated critical stress areas
- Serrated heat-treated saddle provides generous lifting area and secure grip
- Heat-treated extension screw allows low pick-up height adjustment and maximum lift height
- U.S. patented built-in by-pass device protects hydraulic system from overpumping damage
- Unique cross-type forged release valve assures positive control
- A wide, rugged base provides stability and strength
- Critical stress points are reinforced in all models for added durability and dependability
- Economically priced for maximum value

3S20TV

SIDE PUMP BOTTLE JACK DIMENSIONS

Capacity	Product Code	Min. Height	Max. Height	Extension Screw	Hydraulic Lifting	Base Size (L x W)
(tons)		(in)	(in)	(in)	(in)	(in)
12	3T12TV	9.50	18.63	3.13	6.00	5.25 x 5.13
	3S12TV	6.00	10.63	1.63	3.00	
20	3T20TV	9.50	18.63	3.13	6.00	6.25 x 5.88
	3S20TV	6.50	11.25	1.63	3.13	

4M10T

WILLIAMS®

MAINTENANCE KITS

- Sets are portable for easy use in the plant or on the job site
- Custom fitted, rugged blow molded storage case
- 10 ton set has wheels for easy movement
- Designed for applications of pushing, spreading, pressing and more
- Pumps are rated from 8,000 to 10,000 psi

MAINTENANCE KITS

Contents of Kit	Product Code	
	4M04T	4M10T
Hand Pump	X	X
Ram	X	X
Hose Assembly	X	X
Hose Coupler	X	X
Ram Coupler	X	X
Case	X	X
Hydraulic Spreader	X	X
Combination Head (90°)	X	X
Rubber Head	X	X
Ram Toe	X	X
Plunger Toe	X	X
Flat Base	X	X
Serrated Saddle	X	X
Wedge Head	X	X
Male Connector	X	X
Extension Tubes Included	3"	4"
	6 ⅛"	10"
	8 ½"	18"
	16 ½"	27"
	19 ½"	

Capacity	Product Code	Ram		Number of Attachments
		Collapsed Height	Extended Height	
(tons)		(in^2)	(in^3)	
4	4M04T	11.00	15.75	14
10	4M10T	13.63	19.75	13

*When extension tubes and/or offset attachments are used, the capacity is reduced.

WILLIAMS

GAUGES, ADAPTERS, HOSES & HYDRAULIC OIL

8G04W

8G025W

GAUGE SPECIFICATIONS

Gauge Type	Product Code	Face Dia.	Thread	Pressure Range		Graduation			
						Major Graduation	Minor Graduation	Major Graduation	Minor Graduation
		(in)	(in)	(psi)	(bar)	(psi)		(bar)	
Wet	8G05W	2.50	¼"-18NPTF	0-10,000	0-700	1,000	100	100	10
	8G04W	4.00				2,000	200		

8FG38MF

8FB25F38M

8FR38M25F

GAUGE ADAPTER SPECIFICATIONS

Product Code	Dimensions (in)					
	A	B	C	D	E	F
8FG38MF	5.12	1.38	¼"-18NPTF	⅜"-18NPTF	⅜"-18NPTF	1.25

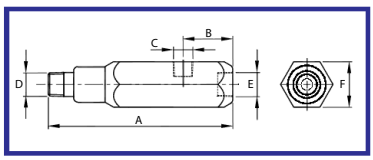

8H3838D06

ADAPTER SPECIFICATIONS

Description	Product Code	Male Thread	Female Thread	Dimensions (in)	
		C	D	A	B
Adapter	8FR38M25F	¼"-18NPTF	⅜"-18NPTF	1.39	0.91
Bushing	8FB25F38M	⅜"-18NPTF	¼"-18NPTF	0.87	0.67

8H2525D06

8H3825D06

HOSE SPECIFICATIONS

Hose I.D.	Product Code	Hose End Fittings	Operating Pressure	Hose Length	Weight
(in)			(psi)	(ft)	(lbs)
¼"	8H2525D006	¼"-18NPTF	10,000	6	2.5
	8H3825D006	⅜"-18NPTF		6	3.0
	8H3825D10			10	5.0
	8H3825D20			20	10.5
⅜"	8H2538D06	¼"-18NPTF		6	3.2
	8H3838D006	⅜"-18NPTF		6	3.5
	8H3838D10			10	6.5
	8H3838D20			20	13.5

8H1G

HYDRAULIC OIL

Volume	Product Code	Viscosity Index	Viscosity @ 100°F	Viscosity @ 210°F	ASTM Grade	Flash Point	Pour Point	API Gravity
(gal)		(min)	(S.U.S.)	(S.U.S.)		(°F)	(°F)	
1	8H1G	144	234	53	215	403	-33	30.8

8R38D

WILLIAMS®

COUPLERS

8RH38DF

8RH38DM

8RH38D

8RH38D

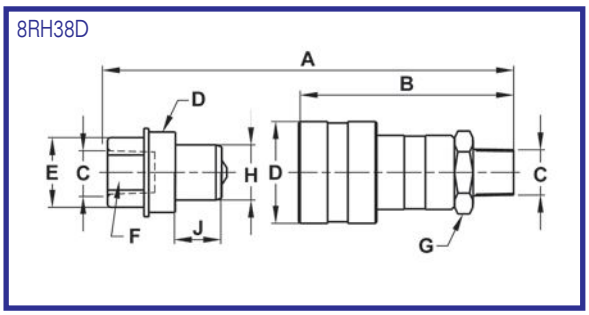

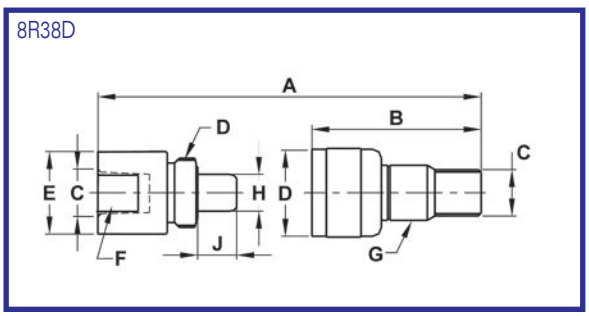

8R38DM

8R38DF

COUPLER DIMENSIONS

Coupler Type	Product code			Dimensions (in)				
	Complete Set	Male Half	Female Half	A*	B	C	D	E
High-Flow Coupler	8RH38D	8RH38DM	8RH38DF	3.35	2.84	⅜"-18NPTF	1 3⁄16"-16	1.10
Regular-Flow Coupler	8R38D	8R38DM	8R38DF	3.15	2.2	⅜"-18NPTF	15⁄16"-20	1.04

* Value A is total length when male and female valves are connected.

WILLIAMS

FLOW CONTROL VALVES

8V38R

8V38N

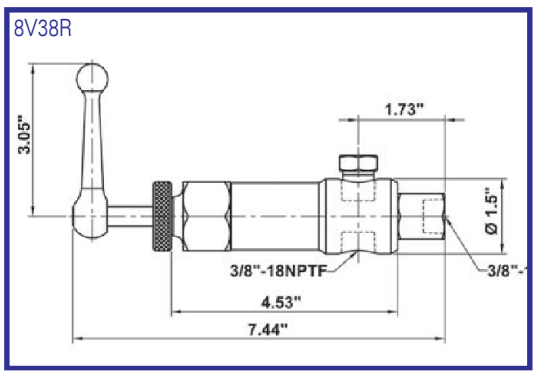

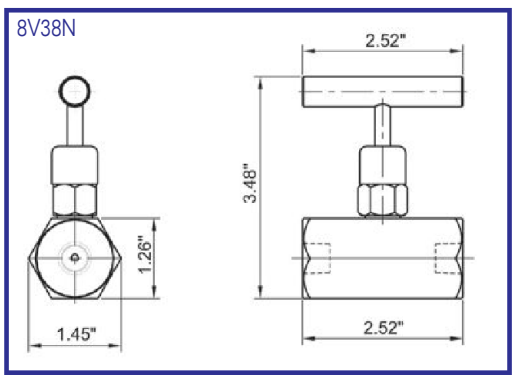

VALVE SPECIFICATIONS

Valve Type	Product Code	Ports	Application	Hydraulic Symbol
Needle Valve	8V38N	3/8"-18NPTF	Controls cylinder speed and treats as temporary shut-off valve for load holding.	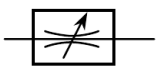
Pressure Relief Valve	8V38R	3/8"-18NPTF	Controls pressure developed by the pump in hydraulic loop. By-pass occurred when pre-set pressured is reached. Turns clockwise to increase pressure, counter clockwise to decrease.	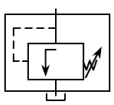

WILLIAMS

MANIFOLDS

Manifold Type	Product Code	Number of Parts	Port Size	Mounting Hole
7" Long Manifold	8M7L7P	7	3/8" - 18NPTF	1/4" - 20UNC
14" Long Manifold	8M14L7P	7		

8M7L7P

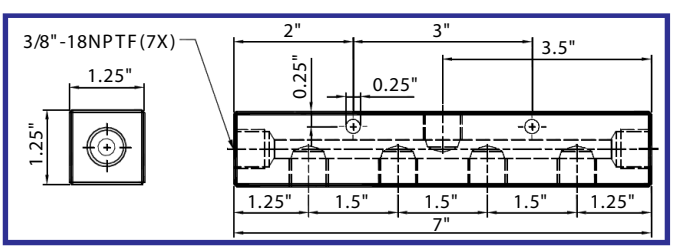

Tools for the Trades

Tools for the Trades

Tools For The Trades

Our truly ergonomic tools make life a lot easier for the professionals who use them. Thanks to their greater comfort and ease of use, these tools reduce fatigue, cramping and injuries like blisters. They are specifically designed to minimize skeletal and neuromuscular strains, to help prevent long-term repetitive motion injuries.

A more comfortable tool is a more productive tool. Our ergonomic tools put greater control, power and precision into your hands, so you not only work faster, you work better.

ergo® Hand Hacksaws

- Bi-molded handles provide superior leverage and gripping comfort.
- Frame keeps blades centered and at high tension for straighter, more accurate cuts.
- Ground tooth bi-metal blades combine safety with increased cutting efficiency.

ergo® Carbide Blade Scrapers

- Bi-molded handles provide superior leverage and gripping comfort.
- Carbide blade stays sharp up to 50 times longer than conventional steel blades.

ergo® Files

- Bi-molded handles provide superior leverage and gripping comfort.
- High quality files designed for specific professional applications.

The World's Most Complete Collection Of Professional Handsaws

Superior – Simply Superior

ergo

- The superior handsaw is a true achievement in craftsmanship. It will cut through any type of wood yet maintain its sharpness for years. Superior saws feature unique Hard-Point XT toothing and a low friction blade coating to reduce sawing effort, an extra thick blade for added stability and precision, and a handle that is truly ergonomic for greater comfort and ease of use.
- Unique XT toothing – The mix of tooth geometry and grinding angles, together with a perfect hardening process, make our unique XT-toothing the ultimate choice for efficient and comfortable sawing.
- Thicker blade for stability and precision.
- Ergonomically designed ergo® handle.

ProfCut - For Professional Results

- Aimed at the professional user, the new ProfCut handsaws feature our new super-sharp Hard-Point GT toothing. There are also a wide variety of application-specific ProfCut saws available for cutting a wide variety of challenging materials such as plywood, laminates, timber, plastics, concreate, and plaster.
- GT-toothing – Our NEW super sharp GT-toothing is specifically developed for high cutting performance. The 3-sided ground tooth form ensures excellent results in all types of wood.
- Unique special application saws.
- Comfortable two-component handle.

PrizeCut – Value with an Edge

- The PrizeCut is a rugged yet affordable handsaw with Hard-Point UT toothing for cutting all types of wood. The solid, single-component handle is designed for sturdy, long-lasting use.
- UT-toothing – The universal toothing is strong and hard wearing, suitable for both rip and cross cutting in all types of wood.
- Hard Point for longer life.

BAHCO

ERGO® HANDSAW SYSTEM

ergo® handle

Product Code	Description
EX-RL	Right-handed Large
EX-RM	Right-handed Medium
EX-LL	Left-handed Large

Features

- The asymmetrical handle design eliminates pressure points and stops the hand sliding on the handle
- Thermoplastic Elastomer (TPE) for optimum friction and a warm feel
- The angle and position of the handle in relation to the blade teeth reduces sawing forces and increases efficiency
- Available for left or right-handed users
- Two different handle sizes* provide maximum grip, comfort and safety
- Easy access to lever through opening in handle end
- Long lever for easy locking and release of the saw blade
- Security spring locks the lever

ergo

EX-RL

EX-RM

EX-LL

BAHCO

ERGO® HANDSAW SYSTEM

Interchangeable blade system

Product Code	Blade Length (inches)	Toothing/Teeth Per Inch	Type of cut
EX-24-XT7-C	24	XT/7	Coarse
EX-22-XT7-C	22	XT/7	Coarse
EX-22-XT9-C	22	XT/9	Medium
EX-19-XT9-C	19	XT/9	Medium
EX-20-XT11-C	20	XT/11	Fine
EX-20-LAM-C	20	XT/11	Flooring
EX-16-GNP-C	16	FT/15	General purpose
EX-14-TEN-C	14	XT/11	Tenon
EX-14-VEN-C	14	XT/11	Veneer
EX-22-PLS-C	22	GT/7	Plaster Saw

Features

- High performance Bahco Superior™ blades
- A selection of ten different blades to cover all common materials and applications
- Simple storage, easy handling and straightforward replacement of worn blades

ergo

EX-24-XT7-C, EX-22-XT7-C Coarse

EX-22-XT9-C, EX-19-XT9-C Medium

EX-20-XT11-C Fine

EX-20-LAM-C Flooring

EX-16-GNP-C General purpose

EX-14-TEN-C Tenon

EX-14-VEN-C Veneer

EX-22-PLS-C Plaster

GRAVITY CLAMP PERFECT PARTNER FOR HANDSAW SYSTEM

GC600 Gravity Clamp is the perfect partner for Bahco's Superior Handsaw System. Incorporating the most comfortable Bahco ERGO™ handle ever plus a range of interchangeable Bahco Superior™ blades, this system promotes professional woodworking. Whatever your work-piece, Bahco has the saw to match!

ergo®

BAHCO®

GRAVITY CLAMP

Workbench

Product Code	Description
GC600	Gravity Clamp Step Workbench

Features

- Gravity fed clamp can hold round or square objects up to 10 in.
- All-aluminium clamping device for securing various types of work pieces quickly and effectively.
- Combines gravity and leverage to hold items without the need for screws or nails.
- Rubber coated feet provide a firm footing.
- Rubber coated wheels for easy moving

GC600

A tight grip in seconds

Step-ladder and tool-holder as well

Fixes wide range of work-pieces

For tough jobs and easy transport

HANDSAW SELECTION TABLE

Selection Table

There are a few things to consider when selecting the right saw for the job. The following steps and the table below will help you to choose. Then complete the selection with other saw features you prefer.

Contact us if you need more information!

Step 1. Select saw model: Superior, ProfCut or PrizeCut.
Step 2. Select saw according to column 1 – Type of saw/material.
Step 3. Select saw according to application – see column 5 and column 6 (Length).

- Precision work: Use fine cut saws with small teeth from 9/10 to 15/16 teeth/points per inch. The length of the saw makes little difference.
- General work: Use medium cut saws with medium size teeth from 7/8 to 9/10 teeth/points per inch. The length should be 18-22 inches for vigorous, thrusting strokes.
- Rough work: Use coarse cut saws with large teeth with 7/8 teeth/points per inch. The length should be 22-26 inches for long, vigorous strokes.

Superior

GENERAL				BLADE					HANDLE
Type of saw/material	Art. code	EAN-code	Pack Qty	Application	Length in/mm	Toothing/TPI	Low friction coating	Thickness of blade	Type
COARSE	2700-24-XT7-HP	7311518191665	4	Timber, wet wood and tanalised	24/600	XT/7	Yes	1.03 mm	Ergo, 2 component
MEDIUM	2600-22-XT-HP	7311518160777	4	Medium cutting	22/550	XT/9	Yes	1.03 mm	Ergo, 2 component
Toolbox saw									
FINE	2600-16-XT11-HP	7311518239527	4	Toolbox	16/400	XT/11	Yes	1.03 mm	Ergo, 2 component
Laminate saw									
LAMINATOR	SUP-20-LAM	7311518258351	4	Laminate and wooden floors	20/500	XT/11	Yes	0.93 mm	Ergo, 2 component

ProfCut

GENERAL				BLADE					HANDLE
Type of saw/material	Art. code	EAN-code	Pack Qty	Application	Length in/mm	Toothing/TPI	Low friction coating	Thickness of blade	Type
ProfCut base assortment									
MEDIUM	PC-22-GT7	7311518263393	4	Medium cutting	22/550	GT/7	No	0.83 mm	2 component
MEDIUM	PC-19-GT7	7311518263362	4	Medium cutting	19/475	GT/7	No	0.83 mm	2 component
Toolbox saw									
FINE	PC-15-TBX	7311518263423	4	Fine cutting/Toolbox	15/380	GT/11	No	0.75 mm	2 component
Small saws									
TENON	PC-12-TEN	7311518263447	4	Tenon saw	12/300	UT/11	No	0.75 mm	2 component
VENEER	PC-12-VEN	7311518263430	4	Veneer saw	12/300	UT/11	No	0.75 mm	2 component
COMPASS	PC-12-COM	7311518263454	4	Compass saw	12/300	XT/9	No	1.03 mm	2 component
Fileable saws									
MEDIUM	PC-22-FILE-U7	7311518263485	4	Medium cutting/Fileable	22/550	UT/7 Fileable	No	0.83 mm	2 component
Dove tail saws									
DOVE TAIL	PC-10-DTR	7311518263546	10	Dovetail right	10/250	UT/13	No	0.50 mm	Wood
DOVE TAIL	PC-10-DTF	7311518263560	10	Dovetail flex	10/250	FT/15	No	0.50 mm	Wood
Special application saws									
Laminate saw									
LAMINATOR	PC-20-LAM	7311518258290	4	Laminate and wooden floors	20/500	XT/11	No	0.93 mm	2 component
Precision saw									
PRECISION	PC-20-PRC	7311518264291	4	Mitre/Precision/Fine	20/500	UT/9	No	0.93 mm	2 component
Timber saw									
TIMBER	PC-24-TIM	7311518263515	4	Coarse cutting/Fileable	24/600	FT/3.5 Fileable	No	0.93 mm	2 component
Plaster saw									
PLASTER	PC-24-PLS	7311518263508	4	Plaster	24/600	GT/7	No	0.93 mm	2 component
General purpose saw									
GEN. PURPOSE	PC-15-GNP	7311518264307	4	General purpose	15/380	FT/15	No	0.75 mm	2 component
Polystyrene, foam saw									
DECOR	PC-16-DECO	7311518264987	4	Polystyrene, foam saw	16/400	Special	No	0.75 mm	2 component

PrizeCut

GENERAL				BLADE					HANDLE
Type of saw/material	Art. code	EAN-code	Pack Qty	Application	Length in/mm	Toothing/TPI	Low friction coating	Thickness of blade	Type
UNIVERSAL	NP-22-U7/8-HP	7311518034399	10	Universal	22/550	UT/7	No	0.83 mm	1 component
UNIVERSAL	NP-19-U7/8-HP	7311518241452	10	Universal	19/475	UT/7	No	0.83 mm	1 component
UNIVERSAL	NP-16-U7/8-HP	7311518241773	4	Universal	16/400	UT/7	No	0.83 mm	1 component
Small saws									
TENON	NP-12-TEN	7311518263959	10	Tenon saw	12/300	UT/13	No	0.75 mm	1 component
VENEER	NP-12-VEN	7311518264260	4	Veneer saw	12/300	UT/13	No	0.75 mm	1 component
COMPASS	NP-12-COM	7311518264277	4	Compass saw	12/300	UT/7	No	1.20 mm	1 component
General purpose saw									
FINE	300-14-F15/16-HP	7311518005955	4	General purpose	14/360	FT/15	No	0.75 mm	1 component

ergo

BAHCO

SUPERIOR HANDSAWS WITH XT TOOTHING

ergo® handle - Unique XT toothing - Low Friction Coating

Product Code	Blade Length (Inch)	Teeth Per Inch (TPI)	Type of cut
Fine Tooth Pattern for smooth, consistent cuts through most materials			
2600-16-XT11-HP	16	11	Fine
2600-22-XT-HP	22	9	Medium
Aggressive tooth pattern for faster cuts through thick material			
2700-22-XT7-HP	22	7	Aggressive
2700-24-XT7-HP	24	7	Aggressive

2600-16-XT-HP

Features

- Hard point saw with substantially thicker blade which results in less power-consuming side vibrations.
- Bevel ground teeth on thick blade for height precision and straight cutting with exceptionally good stability.
- Screwed, one piece two-component ergo® handle.
- Handle placement provides even distribution of power along the tooth line.
- Comes with reusable plastic patented tooth protector.

ergo

BAHCO

SUPERIOR MITER HANDSAW WITH XT TOOTHING

ergo® handle - Unique XT toothing - Low Friction Coating

Product Code	Blade Length (Inch)	Teeth Per Inch (TPI)	Type of cut
3090-20-XT11-HP	20	11	Fine

3090-20-XT11-HP

Features

- Bevel ground teeth on thick blade for high precision and straight cutting with exceptionally good stability.
- Screwed, one piece two-component ergo® handle.
- Handle placement provides even distribution of power along the tooth line.
- Comes with reusable plastic patented tooth protector.

ergo

BAHCO

SUPERIOR BACKSAW WITH XT TOOTHING

ergo® handle - Unique XT toothing - Low Friction Coating

Product Code	Blade Length (Inch)	Teeth Per Inch (TPI)	Type of cut
3180-14-XT11-HP	14	11	Fine

3180-14-XT11-HP

Features

- Specially adapted for cutting of small-diameter timber and miter guide sawing of all sizes of materials.
- Bevel ground teeth on thick blade for high precision and straight cutting with exceptionally good stability.
- Screwed, one piece two-component ergo® handle.
- Handle placement provides even distribution of power along the tooth line.
- Comes with reusable plastic patented tooth protector.

SUPERIOR VENEER SAW WITH XT TOOTHING

ergo® handle - Unique XT toothing - Low Friction Coating

Product Code	Blade Length (Inch)	Teeth Per Inch (TPI)	Type of cut
3240-14-XT11-HP	14	11	Fine

Features

- For fine and medium thick materials, such as plywood, laminates and plastics.
- Bevel ground teeth on thick blade for high precision and straight cutting with exceptionally good stability.
- Curved, toothed nose for starting cuts in the middle of the surface of the work piece.
- Screwed, one piece two-component ergo® handle.
- Handle placement provides even distribution of power along the tooth line.
- Comes with reusable plastic patented tooth protector.

3240-14-XT11-HP

SUPERIOR COMPASS SAW WITH XT TOOTHING

ergo® handle - Unique XT toothing - Low Friction Coating

Product Code	Blade Length (Inch)	Teeth Per Inch (TPI)	Type of cut
3150-12-XT9-HP	12	9	Medium

Features

- For all kinds of woods and plastics.
- Bevel ground teeth on thick blade for high precision and straight cutting.
- Exceptionally good stability, working more on pull than on push.
- Screwed, one piece two-component ergo® handle.
- Handle placement provides even distribution of power along the tooth line.
- Comes with reusable plastic patented tooth protector.

3150-12-XT9-HP

SUPERIOR LAMINATOR SAW

ergo® handle - Unique XT toothing - Low Friction Coating

Product Code	Blade Length (Inch)	Teeth Per Inch (TPI)	Type of cut
SUP-20-LAM	20	11/12	Fine

Features

- A handsaw for cutting laminate and wooden floors.
- Bevel ground teeth on thick blade for high precision and straight cutting with exceptionally good stability.
- Screwed, one piece two-component ergo® handle.
- Handle placement provides even distribution of power along the tooth line.
- Low-friction, rust-protective coating.
- Comes with reusable plastic patented tooth protector.

SUP-20-LAM

ergo

2500-XT

BAHCO

PROFESSIONAL HANDSAWS WITH XT TOOTHING

ergo® handle - Unique XT toothing - Low Friction Coating

Product Code	Blade Length (Inch)	Teeth Per Inch (TPI)	Type of cut
2500-16-XT-HP	16	9	Medium
2500-19-XT-HP	19	9	Medium
2500-22-XT-HP	22	9	Medium

Features

- For medium thick materials, such as plywood, ordinary wood, fiber and chipboard or plastics.
- Hard point saw with substantially thicker blade which results in less power-consuming side vibrations.
- Screwed, one piece two-component ergo® handle.
- Handle placement provides even distribution of power along the tooth line.
- Comes with reusable plastic patented tooth protector.

PC-10-DTF

PC-10-DTR

BAHCO

PROFCUT DOVETAIL HANDSAWS

Fine Cut Detail Saws

Product Code	Style	Blade Length (Inch)	Teeth Per Inch (TPI)
PC-10-DTF	Reversible handle for left / right sawing	10	13/14
PC-10-DTR	Angled / flush cutting	10	13/14

Features

- Special-purpose saw for wood and plastic materials.
- Fine universal toothing with hard point teeth and light steel back for rigidity.
- Blade width is 2-3/8".
- Comes with reusable plastic patented tooth protector.

PC-12-COM

BAHCO

PROFCUT COMPASS HANDSAWS

For Contour Cuts

Product Code	Blade Length (Inch)	Teeth Per Inch (TPI)
PC-12-COM	12	9

Features

- For all kinds of wood and plastic material.
- Medium GT toothing, 9 TPI.
- Super sharp GT-toothing is specially developed for high cutting performance. The 3-sided ground tooth form ensures excellent results in all types of wood.
- Comfortable-two component handle.
- Comes with reusable plastic patented tooth protector.

PROFCUT BACKSAW

For Straight and Miter Cuts

Product Code	Blade Length (Inch)	Teeth Per Inch (TPI)
PC-12-TEN	12	11

Features

- Specially adapted for cutting of small-diameter timber and miter guide sawing of all sizes of materials.
- Fine GT toothing with 11 TPI.
- Super sharp GT-toothing is specially developed for high cutting performance.
- 3-sided ground tooth form ensures excellent results in all types of wood.
- Comfortable-two component handle.
- Comes with reusable plastic patented tooth protector.

PC-12-TEN

PROFCUT VENEER SAW

For Veneer and Other Fine Sawing

Product Code	Blade Length (Inch)	Teeth Per Inch (TPI)
PC-12-VEN	12	11

Features

- For fine and medium thick materials, such as plywood, laminates and plastics.
- Fine GT toothing with 11 TPI.
- Rounded cutting nose for pocket cuts
- Super sharp GT-toothing is specially developed for high cutting performance.
- 3-sided ground tooth form ensures excellent results in all types of wood.
- Comfortable-two component handle.
- Comes with reusable plastic patented tooth protector.

PC-12-VEN

PROFCUT TOOLBOX HANDSAW

Special-purpose Handsaw

Product Code	Blade Length (Inch)	Teeth Per Inch (TPI)
PC-15-TBX	15	11

Features

- Toolbox saw for fine cutting.
- Fine GT toothing, 11 TPI.
- Super sharp GT-toothing is specially developed for high cutting performance. The 3-sided ground tooth form ensures excellent results in all types of wood.
- Comfortable-two component handle.
- Comes with reusable plastic patented tooth protector.

PC-15-TBX

PC-15-GNP

BAHCO

PROFCUT GENERAL PURPOSE HANDSAW

Comfortable two-component handle

Product Code	Blade Length (Inch)	Teeth Per Inch (TPI)
PC-15-GNP	15	15

Features

- Toolbox saw for general purpose cutting.
- Fine GT toothing, 15 TPI.
- Super sharp GT-toothing is specially developed for high cutting performance. The 3-sided ground tooth form ensures excellent results in all types of wood.
- Comfortable-two component handle.
- Comes with reusable plastic patented tooth protector.

PC-16-DECO

BAHCO

PROFCUT POLYSTYRENE, FOAM HANDSAW

Special-purpose handsaw

Product Code	Blade Length (Inch)	Teeth Per Inch (TPI)
PC-16-DECO	16	Special

Features

- Special toothing for cutting polystyrene and foam.
- Super sharp GT-toothing is specially developed for high cutting performance. The 3-sided ground tooth form ensures excellent results in all types of wood.
- Comfortable-two component handle.
- Comes with reusable plastic patented tooth protector.

PC-22-GT7

BAHCO

PROFCUT HANDSAWS

Comfortable two-component handle

Product Code	Blade Length (Inch)	Teeth Per Inch (TPI)
PC-19-GT7	19	7
PC-22-GT7	22	7
PC-22-FILE-U7	22	7 (Fileable)

Features

- Super sharp GT-toothing is specially developed for high cutting performance. The 3-sided ground tooth form ensures excellent results in all types of wood.
- Comfortable-two component handle.
- Comes with reusable plastic patented tooth protector.

PROFCUT LAMINATOR SAW

Special-purpose handsaw

Product Code	Blade Length (Inch)	Teeth Per Inch
PC-20-LAM	20	11/12

Features

- A handsaw for cutting laminate and wooden floors.
- Super sharp GT-toothing is specially developed for high cutting performance. The 3-sided ground tooth form ensures excellent results in all types of wood.
- Comfortable-two component handle.
- Comes with reusable plastic patented tooth protector.

PC-20-LAM

PROFCUT PLASTER SAW

Special-purpose Handsaw

Product Code	Blade Length (Inch)	Teeth Per Inch
PC-24-PLS	24	7

Features

- A handsaw for cutting plaster.
- Super sharp GT-toothing is specially developed for high cutting performance. The 3-sided ground tooth form ensures excellent results in all types of wood.
- Comfortable-two component handle.
- Comes with reusable plastic patented tooth protector.

PC-24-PLS

PROFCUT TIMBER SAW

Comfortable two-component handle with Fileable Blade

Product Code	Blade Length (Inch)	Teeth Per Inch
PC-24-TIM	24	3 1/2

Features

- A handsaw for cutting Timber.
- Super sharp GT-toothing is specially developed for high cutting performance. The 3-sided ground tooth form ensures excellent results in all types of wood.
- Comfortable-two component handle.
- Comes with reusable plastic patented tooth protector.

PC-24-TIM

300-14-F15/16-HP

PRIZECUT TOOLBOX HANDSAW

Product Code	Blade Length (Inch)	Teeth Per Inch (TPI)
300-14-F15/16-HP	15	11

Features

- The universal toothing is strong and hard wearing, suitable for both rip and cross cutting in all types of wood.
- Hard Point for longer life, rust protection lacquered.
- One-component solid handle.
- Comes with reusable plastic patented tooth protector.

NP-12-COM

PRIZECUT COMPASS HANDSAWS

Product Code	Blade Length (Inch)	Teeth Per Inch (TPI)
NP-12-COM	12	9

Features

- For all kinds of wood and plastic material.
- The universal toothing is strong and hard wearing, suitable for both rip and cross cutting in all types of wood.
- Hard Point for longer life, rust protection lacquered.
- One-component solid handle.
- Comes with reusable plastic patented tooth protector.

NP-12-TEN

PRIZECUT BACKSAW

Product Code	Blade Length (Inch)	Teeth Per Inch (TPI)
NP-12-TEN	12	11

Features

- Specially adapted for cutting of small-diameter timber and miter guide sawing, all sizes of materials.
- The universal toothing is strong and hard wearing, suitable for both rip and cross cutting in all types of wood.
- Hard Point for longer life, rust protection lacquered.
- One-component solid handle.
- Comes with reusable plastic patented tooth protector.

PRIZECUT VENEER SAW

Product Code	Blade Length (Inch)	Teeth Per Inch (TPI)
NP-12-VEN	12	11

Features

- For fine and medium thick materials, such as plywood, laminates and plastics.
- The universal toothing is strong and hard wearing, suitable for both rip and cross cutting in all types of wood.
- Hard Point for longer life, rust protection lacquered.
- One-component solid handle.
- Comes with reusable plastic patented tooth protector.

NP-12-VEN

PRIZECUT UNIVERSAL SAW

Product Code	Blade Length (Inch)	Teeth Per Inch (TPI)
NP-16-U7/8-HP	16	7
NP-19-U7/8-HP	19	7
NP-22-U7/8-HP	22	7

Features

- The universal toothing is strong and hard wearing, suitable for both rip and cross cutting in all types of wood.
- Hard Point for longer life, rust protection lacquered.
- One-component solid handle.
- Comes with reusable plastic patented tooth protector.

NP-22-U7/8-HP

LAPLANDER FOLDING SAW

General Purpose Folding Saw

Product Code	Blade Length (Inch)	Teeth Per Inch
396-LAP	8	7

Features

- A general purpose folding saw for cutting both green and dry wood, plastic, bone etc.
- Specially designed for wild-life enthusiasts, hunting and campers.
- XT toothing, 7TPI. Blade specially coated for rust protection and low friction.
- Two-component plastic handle for perfect grip, with leather strap.
- Safety lock, locked also when folded.

396-LAP

296

BAHCO

STRADIVARIUS - MUSICAL SAW

Specially made for musical applications

Product Code	Blade Length (Inch)
296	30

Features

- Polished blade with flat back and un-ground teeth, total length 34 1/4".
- Specially made for musical applications.
- Traditional wood handle with brass hardware.

369

369-BLADE

BAHCO

GENERAL PURPOSE SAW

Aluminum handle

Product Code	Blade Length (Inch)	Teeth Per Inch
369	12	14
369-BLADE	Replacement Blade	

Features

- For a variety of materials such as wood, plywood, plastics, aluminum and thin metal.
- Made of extra thick steel and with black color coating for improved rust protection.
- Equipped with aluminum handle and interchangeable blade, which can be positioned at five different angles.

301

303-5p

216-150-R

BAHCO

COPING SAW

Wooden beech handle

Product Code	Description	Blade Length (Inch)	Teeth Per Inch
301	Coping Saw	6 1/2	14
303-5P	Coping Saw Blades (5 Pack)	6	15
216-150-R	Rod Blade		6

Features

- Nickel-plated steel frame. Orange-lacquered, wooden beech handle.
- Interchangeable blade fitted on retaining pins, turnable 360°.
- Blade of hardened and tempered carbon steel, teeth milled and set, 14TPI.

BAHCO

COMPASS SAW

Aluminum handle

Product Code	Blade Length (Inch)	Teeth Per Inch
321	12 3/8	24
321-7-SB	Replacement Blade	7
321-18-SB	Replacement Blade	18
321-24-SB	Replacement Blade	24

Features

- An easy-to-handle compass saw.
- The interchangeable blade can be positioned at eight different angles by turning the screw in the handle.
- The 321 is supplied with a bi-metal blade, 24 TPI.

321

321-18-SB

BAHCO

JAPANESE STYLE PULL SAWS

Cut on Pull Stroke

Product Code	Blade Length (Inch)	Teeth Per Inch (TPI)	Replacement Blade
PC-12-14-PS	12	14	PC-12-14-PS-B
PC-11-19-PS	11	19	PC-11-19-PS-B
PC-9-9/17-PS	9	9/17	PC-9-9/17-PS-B

Features

- Razor sharp teeth allows this pull saw to make clean cuts with little effort.
- Perfect for rip and cross-cut to flush-cutting moldings, treated lumber, door casings, PVC, ABS pipe, hard and soft woods, plywood, drywall and plastic pipe.
- This pull-to-cut saw allows undercutting with fast and accurate cuts.

PC-11-19-PS

BAHCO

DRY WALL SAW

Jab Saw

Product Code	Blade Length
PC-6-DRY	6

Features

- Cuts drywall, wallboard, plywood, and plastic.
- Blade cuts in both directions (push and pull).
- Sturdy blade with sharp point for punching through drywall.

PC-6-DRY

ergo

10-21-51

BAHCO

BOW SAWS - ERGO®

Ergonomically designed handle

Product Code	Blade Length (Inch)	Type of Wood
10-21-51	21	Dry Wood and Lumber
10-24-51	24	Dry Wood and Lumber
10-24-23	24	Green Wood
10-30-23	30	Green Wood
10-30-51	30	Dry Wood and Lumber
9-36-23-KP	36	Dry Wood and Lumber

* Equipped with non-ergo metal handle.

Features

- Designed for demanding applications and tough environments of construction sites.
- Innovative tensioning mechanism for high blade tension and straight cutting.
- Ergo handle with knuckle protector provides comfort and safety.
- Made of lightweight, high quality steel tubing for durability and easy handling.
- High impact orange enamel paint protects from rust and corrosion.
- Strong blade fitting for easy and safe blade storage.

332

331

BAHCO

BOW SAWS - POINTED NOSE

Durable Handle

Product Code	Blade Length (Inch)	Type of Wood
332-21-51	21	Dry Wood and Lumber
331-21-51-KP*	21	Dry Wood and Lumber

* Equipped with non-ergo metal handle.

Features

- Small and handy bow saw for all around use.
- Pointed nose makes the saw ideal for use in tight spaces.
- Used for pruning and roofing work.
- Model 332 is equipped with an Ergo handle.

333

BAHCO

BOW SAW - QUICK CHANGE

Equipped With Raker Blade for Cutting Dry Wood

Product Code	Blade Length (Inch)
333	14
333-5	Replacement Blade

Features

- The steel frame has special blade holders with a extra strong blade attachment mechanism.
- Reversible blade, hardened for durability which can be rotated around its long axis.
- Equipped with durable plastic handle.
- Handle releases for quick blade changes.

BAHCO

MINI BOWHACK

Durable Metal Handle

Product Code	Blade Length (Inch)	Type of Wood
9-12-51/3806-KP	12	Dry Wood and Lumber

Features

- Toolbox sized mini-bow saw is easy to stow away and is ideal for plumbers and electricians.
- Made of lightweight, high quality steel tubing for durability and easy handling.
- High impact orange enamel paint protects from rust and corrosion.
- Comes with 12" blade for wood cutting and a bi-metal hacksaw blade.
- Equipped with durable metal handle.

9-12-51/3806-KP

BAHCO

ECONOMY BOW SAWS

Durable Metal Handle

Product Code	Blade Length (Inch)
SE-16-21	21
SE-15-24	24
SE-15-30	30

Features

- Made of lightweight, quality steel tubing for durability and easy handling.
- High impact orange enamel paint protects from rust and corrosion.
- Pointed nose on 21" model ideal for use in tight spaces.
- Durable metal handle.

SE-16-21

SE-15-24

SE-15-30

BAHCO

BOW SAW BLADES

Replacement blades

Product Code	Blade Length (Inch)	Type of Wood	Type of Toothing
23-21	21	Green Wood	Raker
23-24	24	Green Wood	Raker
23-30	30	Green Wood	Raker
23-36	36	Green Wood	Raker
51-12	12	Dry Wood and Lumber	Peg
51-21	21	Dry Wood and Lumber	Peg
51-24	24	Dry Wood and Lumber	Peg
51-30	30	Dry Wood and Lumber	Peg
51-36	36	Dry Wood and Lumber	Peg
51-42	42	Dry Wood and Lumber	Peg
333-5	14	Dry Wood	Raker

Features

- Rust-prevention treated.
- Packed in individual sleeve printed with graphically illustrated text for correct blade selection.

23

51-24

333-5

ergo

325

BAHCO

ERGO® PROFESSIONAL HAND HACKSAW

Ergonomic Handles Maximize Cutting Control and Power

Product Code	Description	Blade Length (Inches)
325	ergo® Hand Hacksaw	12

Features

- Ergonomically designed with extremely high blade tension for straight, accurate and fast cuts.
- Centered blade for correct balance and reduced cutting effort.
- Alternative 55° blade mounting for flush cutting.
- Supplied with reliable and shatterproof 12 inch bi-metal blade, 24 TPI.
- Single touch spring loaded blade release mechanism for fast blade changes.
- Winner of the Silver Award from the Industrial Designers Society of America.

319

BAHCO

PROFESSIONAL HAND HACKSAW

Non-Slip Handles Ensures a Solid and Secure Grip.

Product Code	Description	Blade Length (Inches)
319	Professional Hand Hacksaw	12

Features

- Alternative 55° blade mounting for flush cutting.
- Offers a strong steel frame that is covered with a protective dual component plastic.
- Comfortable, non-slip back handle and front grip ensures a solid, secure grip.
- Tension mechanism is fully integrated into the handles so there is no obstruction during use.
- Supplied with reliable and shatterproof 12 inch bi-metal blade, 24 TPI.

317

BAHCO

TRADESMAN'S HAND HACKSAW

Durable Aluminum Handle

Product Code	Description	Blade Length (Inches)
317	Tradesman's Hand Hacksaw	12

Features

- Alternative 90° blade mounting.
- Light and comfortable frame for difficult-to-reach applications.
- Durable aluminum handle.
- Metal tensioning lever designed to be comfortable and unobtrusive.
- Supplied with Bahco Bimetal blade for safety and efficiency.

BAHCO

LIGHTWEIGHT HAND HACKSAW

Durable Aluminum Handle

Product Code	Description	Blade Length (Inches)
306	Lightweight Hand Hacksaw	10 & 12

Features

- Alternative 90° blade mounting.
- Accepts both 10" and 12" blades.
- Ultra light, only 11 ounces.
- Supplied with Bahco Bimetal blade for safety and efficiency.

306

BAHCO

TRADITIONAL HAND HACKSAW

Heavy Duty Frame with Blade Storage

Product Code	Description	Blade Length (Inches)
225-PLUS	Traditional Hand Hacksaw	12

Features

- Allows very high blade tension for accurate and fast cuts.
- Strong rectangular back section for blade storage with easy-to-handle retaining screws.
- Can also be used as a compass saw.
- Alternative 55° blade mounting for flush cutting.
- Supplied with reliable and shatterproof 12 inch bi-metal blade, 24 TPI.

225-PLUS

BAHCO

TRADITIONAL HAND HACKSAW

Heavy Duty Frame with Blade Storage

Product Code	Description	Blade Length (Inches)
225-S	Traditional Hand Hacksaw	12

Features

- Chrome finished and fitted with a fiberglass handle to give a good and comfortable grip.
- Blade storage inside the rectangular back section.
- Blade can be extended for use as a compass saw.
- Alternative 55° blade mounting for flush cutting.

225-S

BAHCO

HACKSAW FRAME WITH HANDLE

Product Code	Description	Length (Inches)
320	Hacksaw Frame with Handle	15

Features

- Hacksaw frame with comfortable and reliable design for all round use.

320

268

BAHCO

MINI HACKSAW

Frame with Solid Steel Profile

Product Code	Description	Blade Length (Inches)
268	Mini Hacksaw	6

Features
- Chrome filled and fitted with a fiberglass handle to give a good and comfortable grip.
- Supplied with reliable and shatterproof 10 inch bi-metal blade, 24 TPI.
- Practical and simple blade-tensioning screw.

228

BAHCO

MINI HACKSAW

Blade-Tensioning Handle

Product Code	Description	Blade Length (Inches)
228	Mini Hacksaw	6

Features
- Simple and quick, twist-action, blade-tensioning handle, made of beech wood and orange lacquered.
- Complete with 6 inch, 32 TPI blade for metal cutting.

228-15-1

BAHCO

MINI HACKSAW BLADES

Anti-corrosion Treated, Carbon Steel Blades

Product Code	Blades per Package	Blade Length (Inches)	TPI	For cutting
228-15-5P	5	6	15	Wood
228-32-5P	5	6	32	Metal

Features
- Made of hardened and tempered carbon steel. Teeth milled and set.

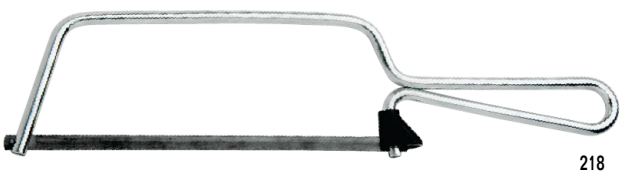
218

BAHCO

MINI HACKSAW

Metal Cutting

Product Code	Description	Blade Length (Inches)
218	Mini Hacksaw	6

Features
- Complete with 6 inch, 32 TPI blade for metal cutting.

208

BAHCO

MINI EXTENDABLE HACKSAW

Perfect for Difficult to Reach Work

Product Code	Description	Blade Length (Inches)
208	Mini Extendable Hacksaw	10

Features
- A mini-hacksaw frame for difficult to reach positions.
- Supplied with reliable and shatterproof 10 inch bi-metal blade, 24 TPI.
- Blade position adjusts for maximum versatility.

BAHCO

TUNGSTEN CARBIDE HACKSAW BLADE

Metal Cutting

Product Code	Description	Blade Length (Inches)
3816-300	Carbide grit hacksaw blade	12

Features

- Anti-corrosion treated, carbon steel blade back.
- Tungsten carbide grit toothing.
- Fits all 12" metal saw frames.

3816-300

BAHCO

BIMETAL HAND HACKSAW BLADES

Virtually Unbreakable and Shatterproof Bimetal Blades for all Metal Sawing

Product Code	Blades per Package	Dimensions (Inches)	Teeth Per Inch
3818-300-PROG-100*	100	12 x 1/2 x .025	18/24/32
3906-250-18-100	100	10 x 1/2 x .025	18
3906-250-24-100	100	10 x 1/2 x .025	24
3906-250-32-100	100	10 x 1/2 x .025	32
3906-300-14-100	100	12 x 1/2 x .025	14
3906-300-14-10P	10	12 x 1/2 x .025	14
3906-300-18-100	100	12 x 1/2 x .025	18
3906-300-18-10P	10	12 x 1/2 x .025	18
3906-300-18-5P	5	12 x 1/2 x .025	18
3906-300-18-2P	2	12 x 1/2 x .025	18
3906-300-24-100	100	12 x 1/2 x .025	24
3906-300-24-10P	10	12 x 1/2 x .025	24
3906-300-24-5P	5	12 x 1/2 x .025	24
3906-300-32-100	100	12 x 1/2 x .025	32
3906-300-32-10P	10	12 x 1/2 x .025	32
3906-300-32-5P	5	12 x 1/2 x .025	32
3906-300-32-2P	2	12 x 1/2 x .025	32
3906-300-3P	3	12 x 1/2 x .025	1 ea of 18,24,32

Features

- Precision ground teeth for all kinds of metal sawing.
- Blade back made of strong, flexible spring steel with a tooth line of high-alloyed super high speed steel.
- Bimetal construction guarantees the blade to keep its sharpness for a long time.
- Precision ground teeth for all kinds of metal sawing.
- Combine extreme cutting performance and wear resistance with a high degree of flexibility.
- Vastly superior to all-hard high speed blades or conventional, flexible blades.
- *Progressive tooth hacksaw blade features 3-tooth patterns for fast starting and cutting.

Progressive Tooth Blade 3818-300-PROG-100

3906-300-18-100

100 Pack

BAHCO

ROD SAW BLADE

Suitable for Cutting Glass, Ceramics, Porcelain and Steel

Product Code	Blades per Package	Blade Length (Inches)	Fits
215-150	1	6	Mini Hacksaws
216-300-R	1	12	All 12" Hacksaws

Features

- Base steel rod coated with cemented carbide.

215-150

215-300

BAHCO®

BI-METAL PORTABLE BANDSAW BLADES

Product Code	Dimensions (inch)	Dimensions (mm)	Length (inch)	Length (mm)	Tooth Type	Teeth per inch
Loops						
PB13-0.5-R-10-1140-5P	½ x 0.020	13 x 0.50	44 7/8	1140	Regular	10
PB13-0.5-R-14-1140-5P	½ x 0.020	13 x 0.50	44 7/8	1140	Regular	14
PB13-0.5-R-18-1140-5P	½ x 0.020	13 x 0.50	44 7/8	1140	Regular	18
PB13-0.5-R-24-1140-5P	½ x 0.020	13 x 0.50	44 7/8	1140	Regular	24
PB13-0.5-10/14-1140-5P	½ x 0.020	13 x 0.50	44 7/8	1140	Combo	10/14
PB13-0.5-14/18-1140-5P	½ x 0.020	13 x 0.50	44 7/8	1140	Combo	14/18

BAHCO® M-42 Bi-Metal Portable Bandsaw Blades

A unique design for multipurpose and jobshop use that provides hand-held machines with fast cutting, easy feeding, exceptional control, and precision cutting on a variety of materials.

Perfect for cutting stainless steel, angle iron, bronze, copper, galvanized pipe, mild steel, aluminum, brass, chrome

Multi-Purpose / Jobshop Cutting for Portable Hand-Held Machines

- Multi-purpose tooth shape provides excellent cuts in awide variety of applications.
- Tough, impact-resistant teeth deliver long life and exceptionally clean cuts on a wide range of materials, including thin wall tubes.
- Pre-welded loops supplied in 5 pack sleeves. Sleeves are individually bar coded.

Identifying the Right BAHCO® Sawblade

Here's how to read product codes for BAHCO® portable loop bandsaw blades.

Example:
PB - 13- 0.5 - R - 10 - 1140 - 5P

- 5P: 5 pack sleeve
- 1140: Loop length: 1140 mm, 447/8"
- 10: Teeth per inch: 10
- R: Tooth shape: Regular (no letter for Combo)
- 0.5: Thickness: 0.5 mm, .020 inch
- 13: Width: 13 mm, 1/2 inch

Grade: 3851 Portable Bandsaw Blades

BAHCO

BANDSAW BLADES

3849 Flexback – Carbon

Width (Inches)	Thickness (Inches)	Teeth Per Inch - Hook 1.3	2	3	4	6
¼	0.025				•	•
⅜	0.025			•	•	•
½	0.025			•	•	•
¾	0.032			•		•
1	0.035		•	•		
1 ¼	0.035	•				
1 ¼	0.042			•		

Features
- For easy to cut non-ferrous materials such as wood, plastics, aluminum, and bronze
- Flexback carbon steel blade.
- Flexible back allows higher band speed

3847 High Hard – Carbon

Width (Inches)	Thickness (Inches)	Teeth Per Inch - Regular 6	8	10	14	18	24
¼	0.025			•	•	•	•
⅜	0.025		•	•	•	•	
½	0.025	•		•	•	•	•
¾	0.032	•	•	•	•	•	
1	0.035	•	•	•	•		

Features
- For easy to cut unalloyed steel
- Hardback carbon steel balde.
- Spring tempered back for fast, straight cuts.

Sandflex M42 – Bimetal

Width (Inches)	Thickness (Inches)	Teeth Per Inch ⅔	¾	4/6	5/8	6/10	8/12	10/14	14/18
¼, ⅜	0.025 0.035							•	
½	0.020							•	•
½	0.025					•	•	•	•
½	0.035					•		•	
¾	0.035			•	•	•	•	•	
1	0.035	•	•	•	•	•	•	•	
1 ¼	0.042	•	•	•	•	•			
1 ½	0.050	•	•	•	•	•			
2	0.062	•	•	•					

Features
- Perfect for solids, bundles, pipes profiles and castings
- Multi-purpose tooth shapes for avariety of applications
- Designed for production and general purpose application sawing.

3857 Easy-Cut – Bimetal

Width (Inches)	Thickness (Inches)
½	0.025
¾	0.035
1	0.035
1 ¼	0.042

Features
- General purpose sawing in tool rooms, machine shops, maintenance rooms, fabricating shops and welding shops
- Easy cut blades cut almost anything without changing blades.
- Perfect for tool steel, mild steel, stainless steel, aluminum, copper, brass, wood, plastic, tubing, solids, bundles and much more.
- Easy to order: Simply specify blade width and length
- Save time and money by reducing blade inventory, operator labor, and machine down time.

Bahco's general purpose bandsaw blades are the perfect choice for a variety of applications. Designed for production and general purpose application sawing.

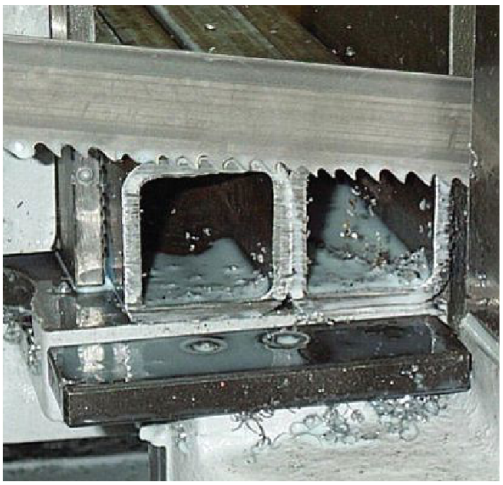

In addition to the saw products in this catalog, Bahco offers a complete line of production cutting bandsaw blades. For more information please contact your Snap-on Industrial Brands representative.

HOLESAWS DESIGNED FOR PROFESSIONAL USE

BAHCO® holesaws set a new standard in precision, quality, durability and versatility. So no matter what you're cutting through, we have the holesaws and arbors to tackle the job, time after time.

Every aspect of a BAHCO® holesaw is engineered to improve a worker's productivity and craftsmanship from the design of the cutting edges to the technologies used to produce the holesaws. BAHCO® holesaws fit all standard portable drills and drill presses.

Bi-Metal Holesaws

- Create clean, accurate holes in most machinable materials.
- High speed cutting edge is electron-beam welded to tough alloy back.
- Vertical slots for easy core removal.
- Diameters from 9/16" to 6".
- Cutting depth for all diameters is 1½".

Carbide-Tipped Holesaws

- Carbide saws cut clean holes in ceramics, bricks, slate, laminate, fiberglass and hardwood.
- Carbide tips are fusion welded to alloy back.
- Vertical slots for easy core removal.
- Diameters from 9/16" to 6".
- Cutting depth for all diameters is 1½".

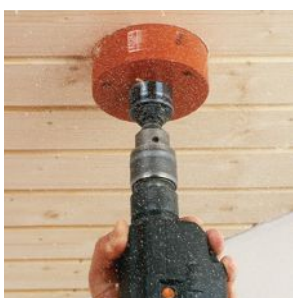

BAHCO® Holesaw Sets

Assortments of holesaws and accessories most commonly used by the trades, especially electricians and plumbers. Each packed in a durable plastic carrying case for convenience.

7 PIECE HOLESAW SET 862007

Product Code
862007

Includes*:

- Holesaws: ⅞", 1", 1 ⅛", 1 ¼", 1 ½"
- Arbor: 3834-ARBR-730
- Adapter: 3834-ADP
- Fits holesaws 9/16"-13/16", 1 ¼"-6"

862007

13 PIECE HOLESAW SET 862013

Product Code
862013

Includes*:

- Holesaws: ¾", ⅞", 1 ⅛", 1 ⅜", 1 ½", 1 ¾", 2", 2 ¼", 2 ½"
- Arbors: 3834-ARBR-730 and 3834-ARBR-1152QC
- Fits holesaws 9/16"-1 3/16", 1 ¼"-6"
- Adapter: 3834-ADP
- Pilot Drill: 3834-DRL-1

862013

17 PIECE HOLESAW SET 862017

Product Code
862017

Includes*:

- Holesaws: ⅝", ¾", ⅞", 1", 1 ⅛", 1 ¼", 1 ⅜", 1 ½", 1 ¾", 2", 2 ½", 3"
- Arbors: 3834-ARBR-730 and 3834-ARBR-11152QC
- Fits holesaws 9/16"-13/16", 1 ¼"-6"
- Adapter: 3834-ADP
- Pilot Drill: 3834-DRL-1 (3 pcs)

862017

21 PIECE HOLESAW SET 862021

Product Code
862021

Includes*:

- Holesaws: ¾", ⅞", 1", 1 ⅛", 1 ⅜", 1 ½", 1 ¾", 2", 2 ¼", 2 ½", 3", 3 ¼", 3 ⅝", 3 ¾", 4 ⅛", 4 ¾"
- Arbors: 3834-ARBR-1130 and 3834-ARBR-11152QC
- Fits holesaws 9/16"-13/16", 1 ¼"-6"
- Pilot Drill: 3834-DRL-1 (3 pcs)

862021

Plumber's Holesaw Set

The sizes that plumbers need most, with the cutting power that produces faster, cleaner holes.

862209

BAHCO

9 PIECE HOLESAW SET 862209

Product Code
862209

Includes*:

- Holesaws: ¾", ⅞", 1 ⅛", 1 ½", 1 ¾", 2 ¼"
- Arbors: 3834-ARBR-730 and 3834-ARBR-1152QC
- Fits holesaws ⁹⁄₁₆"-¹³⁄₁₆", 1 ¼"-6"
- Extension: 3834-EXT-1

Electrician's Holesaw Set

The holesaws electrician's use every day. Offering superior performance and convenience.

862109

BAHCO

9 PIECE HOLESAW SET 862109

Product Code
862109

Includes*:

- Holesaws: ⅞", 1 ⅛", 1 ⅜", 1 ¾", 2", 2 ½"
- Arbors: 3834-ARBR-730 and 3834-ARBR-1152QC
- Fits holesaws ⁹⁄₁₆"-¹³⁄₁₆", 1 ¼"-6"
- Extension: 3834-EXT-1

Carbide Tipped Holesaw Sets

For the professional who works with a wide variety of non-metallic surfaces, this set will cut through anything from hardwood to bricks.

863307

863313

BAHCO

7 PIECE HOLESAW SET 863307

Product Code
863307

Includes*:

- Holesaws: ⅞", 1", 1 ⅛", 1 ¼", 1 ½"
- Arbor: 3834-ARBR-730
- Fits holesaws ⁹⁄₁₆"-¹³⁄₁₆"
- Adapter: 3834-ADP

BAHCO

13 PIECE HOLESAW SET 863313

Product Code
863313

Includes*:

- Holesaws: ¾", ⅞", 1 ⅛", 1 ⅜", 1 ½", 1 ¾", 2", 2 ¼", 2 ½"
- Arbors: 3834-ARBR-730 and 3834-ARBR-1152QC
- Adapter: 3834-ADP
- Pilot Drill: 3834-DRL-1

* Sets come with plastic carrying case.

BAHCO

CARBIDE-TIPPED HOLESAW

Product Code	Diameter (inch)	(mm)
Individual Pack		
3832-14	9/16	14
3832-16	5/8	16
3832-17	11/16	17
3832-19	3/4	19
3832-20	25/32	20
3832-21	13/16	21
3832-22	7/8	22
3832-24	15/16	24
3832-25	1	25
3832-27	1 1/16	27
3832-29	1 1/8	29
3832-30	1 3/16	30
3832-32	1 1/4	32
3832-33	1 5/16	33
3832-35	1 3/8	35
3832-37	1 7/8	37
3832-38	1 1/2	38
3832-40	1 9/16	40
3832-41	1 5/8	41
3832-43	1 11/16	43
3832-44	1 3/4	44
3832-46	1 13/16	46
3832-48	1 7/8	48
3832-51	2	51
3832-52	2 1/16	52
3832-54	2 1/8	54
3832-56	2 3/16	56
3832-57	2 1/4	57
3832-59	2 5/16	59
3832-60	2 3/8	60
3832-64	2 1/2	64
3832-65	2 9/16	65
3832-67	2 5/8	67
3832-68	2 11/16	68
3832-70	2 3/4	70
3832-73	2 7/8	73
3832-76	3	76
3832-79	3 1/8	79
3832-83	3 1/4	83
3832-86	3 3/8	86
3832-89	3 1/2	89
3832-92	3 5/8	92
3832-95	3 3/4	95
3832-98	3 7/8	98
3832-102	4	102
3832-105	4 1/8	105
3832-108	4 1/4	108
3832-111	4 3/8	111
3832-114	4 1/2	114
3832-121	4 3/4	121
3832-127	5	127
3832-133	5 1/4	133
3832-140	5 1/2	140
3832-146	5 3/4	146
3832-152	6	152

Carbide-Tipped Holesaws

BAHCO® carbide holesaws are designed to quickly and cleanly cut precise holes in ceramics, bricks, slate, laminate, fiberglass and hardwood.

Features:

- BAHCO® carbide holesaws are designed to quickly and cleanly cut precise holes in ceramics, bricks, slate, laminate, fiberglass and hardwood.
- With 4 precision ground carbide tips per inch — fusion-welded to an alloy steel back — these holesaws provide an impressive combination of strength, cutting power and durability.
- Equipped with vertical slots for easy core removal, carbide-tipped holesaws are available in diameters from 9/10" to 6"; cutting depth for all holesaws is 1 ½".

BAHCO®

Bi-Metal Holesaws

BAHCO® was the first to create a successful bi-metal blade that combines a flexible, shatter-resistant spring steel back with a high speed steel cutting edge to provide faster, more durable cutting power. With the latest generation of bi-metal holesaws, we take the technology even further.

- The cutting edge (with 4 to 6 teeth per inch) is electron beam-welded to a tough alloy back, and then the teeth are precision ground to further increase cutting efficiency.
- The result is a holesaw that can cut clean, accurate holes in virtually any machinable material.
- Vertical slots allow easy core removal.

BI-METAL HOLESAW

Product Code	Diameter (inch)	Diameter (mm)
Individual Pack		
3830-14-VIP	9/16	14
3830-16-VIP	5/8	16
3830-17-VIP	11/16	17
3830-19-VIP	3/4	19
3830-20-VIP	25/32	20
3830-21-VIP	13/16	21
3830-22-VIP	7/8	22
3830-24-VIP	15/16	24
3830-25-VIP	1	25
3830-27-VIP	1 1/16	27
3830-29-VIP	1 1/8	29
3830-30-VIP	1 3/16	30
3830-32-VIP	1 1/4	32
3830-33-VIP	1 5/16	33
3830-35-VIP	1 3/8	35
3830-37-VIP	1 7/16	37
3830-38-VIP	1 1/2	38
3830-40-VIP	1 9/16	40
3830-41-VIP	1 5/8	41
3830-43-VIP	1 11/16	43
3830-44-VIP	1 3/4	44
3830-46-VIP	1 13/16	46
3830-48-VIP	1 7/8	48
3830-51-VIP	2	51
3830-52-VIP	2 1/16	52
3830-54-VIP	2 1/8	54
3830-56-VIP	2 3/16	56
3830-57-VIP	2 1/4	57
3830-59-VIP	2 5/16	59
3830-60-VIP	2 3/8	60
3830-64-VIP	2 1/2	64
3830-65-VIP	2 9/16	65
3830-67-VIP	2 5/8	67
3830-68-VIP	2 11/16	68
3830-70-VIP	2 3/4	70
3830-73-VIP	2 7/8	73
3830-76-VIP	3	76
3830-79-VIP	3 1/8	79
3830-83-VIP	3 1/4	83
3830-86-VIP	3 3/8	86
3830-89-VIP	3 1/2	89
3830-92-VIP	3 5/8	92
3830-95-VIP	3 3/4	95
3830-98-VIP	3 7/8	98
3830-102-VIP	4	102
3830-105-VIP	4 1/8	105
3830-108-VIP	4 1/4	108
3830-111-VIP	4 3/8	111
3830-114-VIP	4 1/2	114
3830-121-VIP	4 3/4	121
3830-127-VIP	5	127
3830-133-VIP	5 1/4	133
3830-140-VIP	5 1/2	140
3830-146-VIP	5 3/4	146
3830-152-VIP	6	152

BAHCO

ARBORS 3834-ARBR

Product Code	Diameter (inch)	Diameter (mm)
Fits Holesaws 9/16" – 1 3/16", 14 – 30mm, Industrial Box		
3834-ARBR-630	1/4 HEX	6.4mm HEX
3834-ARBR-730	9/32 TRI	7mm TRI
3834-ARBR-930	11/32 HEX	8.5mm HEX
3834-ARBR-1130	7/16 HEX	11.1mm HEX
3834-ARBR-SD30	SDS	SDS

Product Code	Diameter (inch)	Diameter (mm)
Fits Holesaws 1 1/4" – 6", 32 – 152mm, Industrial Box		
3834-ARBR-11152	7/16 HEX	11.1mm HEX
3834-ARBR-11152QC	7/16 HEX	11.1mm HEX
3834-ARBR-16152QC	5/8 HEX	11.1mm HEX
3834-ARBR-SD152QC	SDS	SDS

Product Code	Diameter (inch)	Diameter (mm)
Fits Holesaws 1 1/4" – 6", 32 – 100mm, Industrial Box		
3834-ARBR-9100	11/32 HEX	8.5mm HEX
3834-ARBR-9100QC	11/32 HEX	8.5mm HEX

All arbors are hardened for maximum strength. Large arbors, for holesaws 1 1/4" – 6", have drive pins to transfer large cutting force from the holesaw to the power unit. Pilot drill is included.

3834-ARBR

BAHCO

ARBOR EXTENSION — 3834-EXT

Product Code	Diameter (inch)	Diameter (mm)	Length (inch)	Length (mm)
Fits Arbors -1130, -11152QC				
3834-EXT-1	7/16	6.4mm HEX	12	300mm

3534-EXT-1

BAHCO

PILOT DRILLS 3834-DRL

Product Code	Diameter (inch)	Diameter (mm)	Length (inch)	Length (mm)
Fits Arbors -730, -930,-1130, -9100QC, 11152QC, -16152QC				
3834-DRL	1/4	6.40mm	3.31	84mm
Fits Arbors -730, -930,-1130, -9100QC, -11152QC, -16152QC				
3834-DRL-CT	1/4	6.40mm	3.31	84mm

The HSS pilot drill (3834-DRL) and the carbide-tipped pilot drill (3834-DRL-CT) make a hole before the teeth of the holesaw become engaged, building and keeping the holesaw in the correct position.

3834-DRL-CT

3834-DRL

BAHCO

DRIVE PLATE 3834-DP

Product Code
Fits Holesaws 3" – 4 1/8", 76– 105mm
3834-DP-75

Designed for heavy operation in stationary and portable machines where an extra strong and rigid holesaw is required. Prevents holesaw drive-pin holes becoming elongated particularly when using heavy, portable machine.

3834-DP

BAHCO

ARBOR ADAPTER 3834-ADP

Product Code
Fits Arbors -730, -930, -1130
3834-ADP

Adapts small arbor thread (1/2"-20 UNF) to accommodate large holesaw thread (5/8"-28 UNF).

3834-ADP

BAHCO

EJECTOR SPRING 3834-ES

Product Code
Fits Pilot Drill 3834-DRL
3834-ES

For pilot drills, to facilitate core removal.

3834-ES

BAHCO®

Choosing the Right Reciprocating Blade

How to select the perfect blade for the job from a comprehensive line of professional grade reciprocating sawblades.

Teeth Per Inch (TPI)	Material Thickness (inch)	(mm)
24 TPI	0 – 1/8	0 – 3mm
18 TPI	1/8 – 1/4	3 – 6mm
14 TPI	1/8 – 3/8	3 – 10mm
10 TPI	3/16 – 5/8	5 – 15mm
8/12 TPI	1/8 – 3/8	3 – 10mm
6 TPI	3/16 – 1	5 – 25mm
5/8 TPI	3/16 – 1	5 – 25mm
4/6 TPI	3/16 – 1	5 – 25mm
UST	3/16 – 1	5 – 25mm
DSL	3/16 – 1	5 – 25mm
Grit	1/8 – 3/8	3 – 10mm

Step 1: Determine the right toothing.

BAHCO® reciprocating sawblades feature aggressive, precision-ground teeth. In addition, many bi-metal blades feature variable teeth spacing. It all adds up to unbeatable sawing performance and versatility. Material type and thickness determine which toothing pattern and TPI will work best.

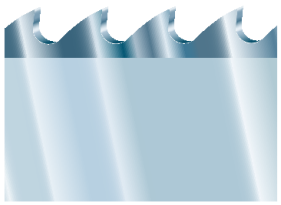

Step 2: Choose the right blade.

Recommended sawblade types for different materials and applications.

Carbon	Bi-Metal	Bi-Metal
3842-series	3840-series	3840-demolition

Carbide Grit	Carbide Teeth
3846-series	3846-series

Step 3: Identify the BAHCO® reciprocating sawblade.

Here's how to read product codes for BAHCO® reciprocating sawblades.

Example: 3840 - 150 - 14 - ST - 5P

- 5P — Packaging Quantity: 1, 2, 5, 100
- ST — Blade Shape: ST = Standard; UST = U-shank; SL = Slope; SC = Scroll
- 14 — Teeth Per Inch (TPI)
- 150 — Blade Length in mm
- 3840 — Blade

BAHCO®

STANDARD BI-METAL BLADE

Product Code	Blade-length (inch)	Blade-length (mm)	Blade-thickness (inch)	Blade-thickness (mm)	Teeth per inch
Self Service Package, 5 Per Pack					
3840-100-6-ST-5P	4	100	0.050	1.3	6
3840-100-14-ST-5P	4	100	0.035	0.9	14
3840-100-18-ST-5P	4	100	0.035	0.9	18
3840-100-24-ST-5P	4	100	0.035	0.9	24
3840-150-6-ST-5P	6	150	0.050	1.3	6
3840-150-8/12-ST-5P	6	150	0.350	0.9	8/12
3840-150-10-ST-5P	6	150	0.035	0.9	10
3840-150-14-ST-5P	6	150	0.035	0.9	14
3840-150-18-ST-5P	6	150	0.035	0.9	18
3840-150-24-ST-5P	6	150	0.035	0.9	24
3840-228-8/12-ST-5P	9	228	0.050	1.3	8/12
3840-228-10-ST-5P	9	228	0.035	0.9	10
3840-228-14-ST-5P	9	228	0.035	0.9	14
3840-228-18-ST-5P	9	228	0.035	0.9	18
3840-300-14-ST-5P	12	300	0.035	0.9	14
3840-300-18-ST-5P	12	300	0.035	0.9	18
Industrial Package, 10 Per Pack					
3840-100-6-ST-10P	4	100	0.050	1.3	6
3840-100-14-ST-10P	4	100	0.035	0.9	14
3840-100-18-ST-10P	4	100	0.035	0.9	18
3840-100-24-ST-10P	4	100	0.035	0.9	24
3840-150-6-ST-10P	6	150	0.050	1.3	6
3840-150-8/12-ST-10P	6	150	0.035	0.9	8/12
3840-150-10-ST-10P	6	150	0.035	0.9	10
3840-150-14-ST-10P	6	150	0.035	0.9	14
3840-150-18-ST-10P	6	150	0.035	0.9	18
3840-150-24-ST-10P	6	150	0.035	0.9	24
3840-228-8/12-ST-10P	9	228	0.050	1.3	8/12
3840-228-10-ST-10P	9	228	0.035	0.9	10
3840-228-14-ST-10P	9	228	0.035	0.9	14
3840-228-18-ST-10P	9	228	0.035	0.9	18
3840-300-14-ST-10P	12	300	0.035	0.9	14
3840-300-18-ST-10P	12	300	0.035	0.9	18
Industrial Package, 100 Per Pack					
3840-150-8/12-ST-100P	6	150	0.035	0.9	8/12
3840-150-10-ST-100P	6	150	0.035	0.9	10
3840-150-14-ST-100P	6	150	0.035	0.9	14
3840-150-18-ST-100P	6	150	0.035	0.9	18
3840-150-24-ST-100P	6	150	0.035	0.9	24
3840-228-8/12-ST-100P	9	228	0.050	1.3	8/12
3840-228-10-ST-100P	9	228	0.035	0.9	10
3840-228-14-ST-100P	9	228	0.035	0.9	14
3840-228-18-ST-100P	9	228	0.035	0.9	18
3840-300-14-ST-100P	12	300	0.035	0.9	14
3840-300-18-ST-100P	12	300	0.035	0.9	18

For straight and quick cutting of metal, plastic, laminates and wood with nails.

Bi-Metal Blades

Precision-ground teeth give you unbeatable cutting power, along with greater control, speed and precision.

BAHCO® bi-metal blades are the perfect combination of strength and flexibility. Blades feature powerful teeth of hardened, high-speed steel which are electron beam-welded onto a spring steel backing.

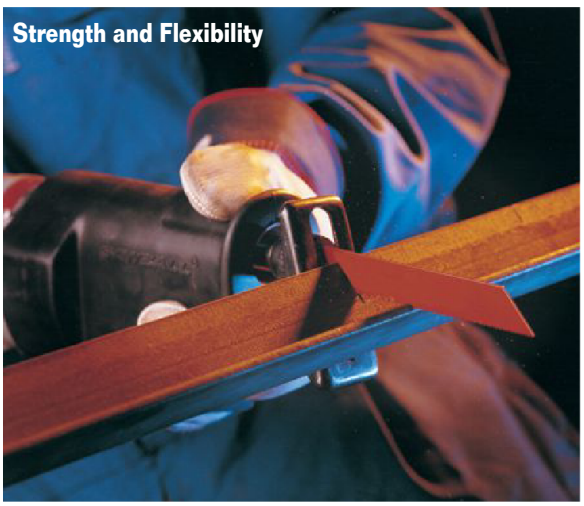

Blade configurations include universal toothing for straight and rapid cutting of wood, metal, plastic, and wood with nails, blades for contour sawing, and blades with variable tooth spacing.

Informative Packaging

Self-Service Packaging

Industrial Packaging

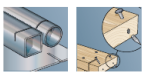

SLOPE BI-METAL BLADES

Product Code	Blade-length (inch)	Blade-length (mm)	Blade-thickness (inch)	Blade-thickness (mm)	Teeth per inch
Self Service Package, 5 Per Pack					
3840-150-5/8-SL-5P	6	150	0.050	1.3	5/8
3840-228-6-SL-5P	6	228	0.050	1.3	6
3840-300-6-SL-5P	9	300	0.050	1.3	6
3840-300-8/12-SL-5P	12	300	0.050	1.3	8/12
Industrial Package, 10 Per Pack					
3840-150-5/8-SL-10P	6	150	0.050	1.3	5/8
3840-228-6-SL-10P	9	228	0.050	1.3	6
3840-300-6-SL-10P	12	300	0.050	1.3	6
3840-300-8/12-SL-10P	2	300	0.050	1.3	8/12
Industrial Package, 100 Per Pack					
3840-150-5/8-SL-100p	6	150	0.050	1.3	5/8

- For all-round cutting of metal, plastic, laminates and wood with nails.

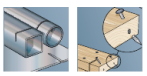

SCROLL BI-METAL BLADES

Product Code	Blade-length (inch)	Blade-length (mm)	Blade-thickness (inch)	Blade-thickness (mm)	Teeth per inch
Self Service Package, 5 Per Pack					
3840-100-10-SC-5P	4	100	0.035	0.9	10
3840-100-14-SC-5P	4	100	0.035	0.9	14
3840-100-18-SC-5P	4	100	0.035	0.9	18
3840-150-4/6-SC-5P	6	150	0.050	1.3	4/6
Industrial Package, 10 Per Pack					
3840-150-4/6-SC-10P	6	150	0.050	1.3	4/6

- For all-round cutting of metal, plastic, laminates and wood with nails.

DEMOLITION BI-METAL BLADES

Product Code	Blade-length (inch)	Blade-length (mm)	Blade-thickness (inch)	Blade-thickness (mm)	Teeth per inch
Self Service Package, 5 Per Pack					
3840-150-5/8-DSL-5P	6	150	0.062	1.6	5/8
3840-228-5/8-DSL-5P	9	228	0.062	1.6	5/8
3840-300-5/8-DSL-5P	12	300	0.062	1.6	5/8
3840-228-10-DSL-5P	9	228	0.062	1.6	10/14
Industrial Package, 10 Per Pack					
3840-150-5/8-DSL-10P	6	150	0.062	1.6	5/8
3840-228-5/8-DSL-10P	9	228	0.062	1.6	5/8
3840-300-5/8-DSL-10P	12	300	0.062	1.6	5/8
3840-228-10-DSL-5P	9	228	0.062	1.6	10/14

- Extra heavy-duty bi-metal blade with coarse teeth for building and demolition work
- Blade thickness is increased 0.062" (1.6 mm) for greater strength – making this blade ideal for cutting any building material – even heavy wood with large-dimension nails.
- Designed for use by emergency services.

BAHCO

LOW FRICTION WOOD CUTTING BLADES

Product Code	Blade-length (inch)	Blade-length (mm)	Blade-thickness (inch)	Blade-thickness (mm)	Teeth per inch
Self Service Package, 5 Per Pack					
3842-150-7-SL-5P	6	150	0.040	1.0	7
3842-228-7-SL-5P	9	228	0.040	1.0	7
3842-300-7-SL-5P	12	300	0.040	1.0	7
Industrial Package, 10 Per Pack					
3842-150-7-SL-10P	6	150	0.040	1.0	7
3842-228-7-SL-10P	9	228	0.040	1.0	7
3842-300-7-SL-10P	12	300	0.040	1.0	7

Not for wood with nails.

- Blades with special teeth for general wood cutting. The teeth allows faster cross cutting and ripping compared to traditional blades. Low friction blade coating minimizes friction to further increase cutting speed and ease.

BAHCO

CARBIDE TIPPED BLADE

Product Code	Blade-length (inch)	Blade-length (mm)	Blade-thickness (inch)	Blade-thickness (mm)	Teeth per inch
Self Service Package, 1 Per Pack					
3846-150-6-SL-1P	6	150	0.035	0.9	6
3846-228-3-ST-1P	9	228	0.050	1.3	3
3846-228-6-ST-1P	9	228	0.035	0.9	6
3846-300-3-ST-1P	12	300	0.050	1.3	3
3846-300-6-ST-1P	12	300	0.035	0.9	6

- Blade with carbide tipped teeth for cutting bricks, porous concrete, fiberglass, plastic laminates, cement board, plywood, cast aluminum, rubber and hardwoods.
- Designed for cutting extremely hard materials. These are the blades to use in demanding building and industrial applications.

BAHCO

CARBIDE GRIT BLADE

Product Code	Blade-length (inch)	Blade-length (mm)	Blade-thickness (inch)	Blade-thickness (mm)
Self Service Package, 2 Per Pack				
3846-100-G-ST-2P	4	100	0.035	0.9
3846-150-G-ST-2P	6	150	0.035	0.9

- Blade with carbide grit cutting edge, designed for precision cutting of extremely hard materials: glass, glazed tiles, ceramics, fiberglass, cast iron, clay pipe, stone, bricks, plaster and marble.

BI-METAL HEAVY DUTY METAL CUTTING BLADES

Product Code	Blade-length (inch)	Blade-length (mm)	Blade-thickness (inch)	Blade-thickness (mm)	Blade-width (inch)	Blade-width (mm)	Teeth per inch
Self Service Package, 5 Per Pack							
3840-150-10-HST-5P	6	150	0.042	1.07	1	25	10
3840-150-14-HST-5P	6	150	0.042	1.07	1	25	14
3840-150-18-HST-5P	6	150	0.042	1.07	1	25	18
3840-228-10-HST-5P	9	228	0.042	1.07	1	25	10
3840-228-14-HST-5P	9	228	0.042	1.07	1	25	14
3840-228-18-HST-5P	9	228	0.042	1.07	1	25	18
3840-300-10-HST-5P	12	300	0.042	1.07	1	25	10
3840-300-14-HST-5P	12	300	0.042	1.07	1	25	14
3840-300-18-HST-5P	12	300	0.042	1.07	1	25	18
Industrial Package, 10 per Pack							
3840-150-10-HST-10P	6	150	0.042	1.07	1	25	10
3840-150-14-HST-10P	6	150	0.042	1.07	1	25	14
3840-150-18-HST-10P	6	150	0.042	1.07	1	25	18
3840-228-10-HST-10P	9	228	0.042	1.07	1	25	10
3840-228-14-HST-10P	9	228	0.042	1.07	1	25	14
3840-228-18-HST-10P	9	228	0.042	1.07	1	25	18
3840-300-10-HST-10P	12	300	0.042	1.07	1	25	10
3840-300-14-HST-10P	12	300	0.042	1.07	1	25	14
3840-300-18-HST-10P	12	300	0.042	1.07	1	25	18

- Designed for extreme metal cutting. A thicker blade and wider body makes the blade more rigid and has a higher resistance to fracturing and bending, allowing straighter cuts.

BI-METAL PALLET CUTTING BLADE

Product Code	Blade-length (inch)	Blade-length (mm)	Blade-thickness (inch)	Blade-thickness (mm)	Teeth per inch
Industrial Package, 10 per pack					
3840-228-10/14-PR09-10P	9	228	0.035		10/14
3840-228-10/14-PR13-10P	9	228	0.050		10/14
3840-228-10/14-PR09-100P	9	228	0.035		10/14
3840-228-10/14-PR13-100P	12	228	0.050		10/14

- Designed for pallet repair shops. Unique V-shape front design prevents the blade from jamming in the wood when cutting nails in damaged parts of the pallet.

BI-METAL CAR BODY SAW BLADES

Product Code	Blades per Package	Length (inch)	Teeth per inch	Material Thickness Capacity (Inches)
3845-18-10P	10	3.625	18	Over 0.20
3845-18-100P – Bulk	100	3.625	18	Over 0.20
3845-24-10P	10	3.625	24	0.08 to 0.20
3845-24-100P – Bulk	100	3.625	24	0.08 to 0.20
3845-32-10P	10	3.625	32	0 to 0.08
3845-32-100P – Bulk	100	3.625	32	0 to 0.08

- Car-body saw blades for pneumatic or electric reciprocatingbody shop saws. Mainly used in automotive bodyshops. Bulk packed for heavy usage applications.

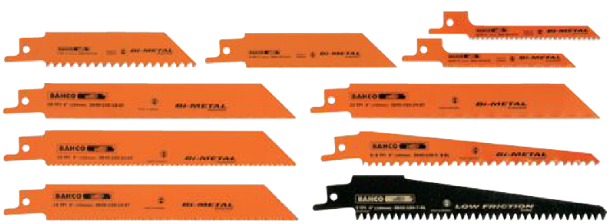

10 Piece Set
RECIP-SET-10

BI-METAL RECIPROCATING SAWBLADE SET

Product Code
RECIP-SET-10

Includes:

3840-100-6-ST	3840-100-10-SC
3840-100-18-SC	3840-100-24-ST
3840-150-5/8-SL	3840-150-10-ST
3840-150-14-ST	3840-150-18-ST
3840-150-24-ST	3842-150-7-SL

- These sets contain the most commonly used BAHCO® reciprocating sawblades, so they're perfect choices to meet a wide range of all-around applications.

BAHCO

SPADE BITS

Fast Wood Boring

Product Code	Diameter (Inch)	Product Code	Diameter (Inch)
9529-1/4	1/4	9529-13/16	13/16
9529-3/8	3/8	9529-7/8	7/8
9529-7/16	7/16	9529-15/16	15/16
9529-1/2	1/2	9529-1	1
9529-9/16	9/16	9529-1-1/8	1 1/8
9529-5/8	5/8	9529-1-1/4	1 1/4
9529-11/16	11/16	9529-1-3/8	1 3/8
9529-3/4	3/4	9529-1-1/2	1 1/2

9529

Features
- Positive cutting angle for faster and cleaner drilling.
- Hardened blades made from high-carbon steel.

BAHCO

AUGER BITS - SHORT - LONG

Sharp and Long Life

Short

Product Code	Diameter (Inch)	Product Code	Diameter (Inch)
9526-3/8	3/8	9526-13/16	13/16
9526-7/16	7/16	9526-7/8	7/8
9526-1/2	1/2	9526-15/16	15/16
9526-9/16	9/16	9526-1	1
9526-5/8	5/8	9526-1-1/8	1 1/8
9526-11/16	11/16	9526-1-1/4	1 1/4
9526-3/4	3/4	9526-1-3/8	1 3/8
		9526-1-1/2	1 1/2

9526

Long

Product Code	Diameter (Inch)	Product Code	Diameter (Inch)
9527-3/8	3/8	9527-13/16	13/16
9527-7/16	7/16	9527-7/8	7/8
9527-1/2	1/2	9527-15/16	15/16
9526-9/16	9/16	9527-1	1
9527-5/8	5/8	9527-1-1/8	1 1/8
9527-11/16	11/16	9527-1-1/4	1 1/4
9527-3/4	3/4	9527-1-3/8	1 3/8
		9527-1-1/2	1 1/2

9527

Features
- Overall length 16", twist length 12.
- Heavy duty cutting edge.
- Tip is self-tapping which makes drilling easier.
- Hollow center flutes allow the chips out of the hole easier allowing for a cleaner cut.
- Hex shank prevents slipping in chuck.

BAHCO

STEP BITS

Product Code	Hole Size (inch)	Increments
228-HSS-1	3/16 - 1/2	3/16, 1/4, 5/16, 3/8, 7/16, 1/2
228-HSS-3	1/4 - 3/4	1/4, 5/16, 3/8, 7/16, 1/2, 9/16, 5/8, 11/16, 3/4
228-HSS-4	3/16 - 7/8	3/16, 1/4, 5/16, 3/8, 7/16, 1/2, 9/16, 5/8, 11/16, 3/4, 13/16, 7/8
228-HSS-6	7/8 - 1 3/8	7/8, 1 1/8, 1 7/32, 1 1/4, 1 3/8

228-HSS-1

Features
- Made of high speed steel. Self starting tip which makes drilling easier. Multiple steps eliminate need for individual sized drill bits. Hex shank prevents slipping in chuck. Hole Size increments marked.

BAHCO

LATHE FILE

1-104-10-2-0

Engineering File

Product Code	Length (Inch)	Width (Inch)	Height (Inch)	Teeth Per Inch (TPI)	Type of Cut
1-104-10-2-0	10	31/32	13/64	28	Second
1-104-10-3-0	10	31/32	13/64	39	Smooth
1-104-12-2-0	12	1 11/64	3/16	23	Second
1-104-12-3-0	12	1 11/64	3/16	33	Smooth
1-104-14-3-0	14	1 3/8	15/64	28	Smooth

Features

- For polishing and deburring work in lathes. Releases chips easily and produces 3 surfaces.

ergo

BAHCO

HAND FILE

1-106-08-1-2

1-106-08-1-0

Engineering File

Product Code	Length (Inch)	Width (Inch)	Height (Inch)	Teeth Per Inch (TPI)	Type of Cut
With Bi-Molded Ergo® Handle					
1-106-08-1-2	8	25/32	3/16	25	Bastard
1-106-10-1-2	10	31/32	13/64	23	Bastard
Without handle					
1-106-08-1-0	8	25/32	3/16	25	Bastard
1-106-10-1-0	10	31/32	13/64	23	Bastard
1-106-12-1-0	12	1 11/64	15/64	20	Bastard

Features

- Useful for all flat filing. Oberg cut gives a high removal rate and smooth surface finish on most materials.

BAHCO

ergo

FLAT FILE

Engineering File

Product Code	Length (Inch)	Width (Inch)	Height (Inch)	Teeth Per Inch (TPI)	Type of Cut
With Bi-Molded Ergo® Handle					
1-110-08-1-2	8	25/32	3/16	25	Bastard
1-110-08-2-2	8	25/32	3/16	36	Second
1-110-10-1-2	10	1	7/32	23	Bastard
1-110-10-2-2	10	1	7/32	30	Second
Without handle					
1-110-04-1-0	4	15/32	3/32	43	Bastard
1-110-04-2-0	4	15/32	3/32	56	Second
1-110-04-3-0	4	15/32	3/32	71	Smooth
1-110-06-1-0	6	5/8	5/32	33	Bastard
1-110-06-2-0	6	5/8	5/32	46	Second
1-110-06-3-0	6	5/8	5/32	56	Smooth
1-110-08-1-0	8	25/32	3/16	25	Bastard
1-110-08-2-0	8	25/32	3/16	36	Second
1-110-08-3-0	8	25/32	3/16	46	Smooth
1-110-10-1-0	10	1	7/32	23	Bastard
1-110-10-2-0	10	1	7/32	30	Second
1-110-10-3-0	10	1	7/32	41	Smooth
1-110-12-1-0	12	1 13/16	15/64	20	Bastard
1-110-12-2-0	12	1 13/16	15/64	28	Second
1-110-12-3-0	12	1 13/16	15/64	36	Smooth
1-110-14-1-0	14	1 3/8	1/4	18	Bastard

1-110-08-1-2

1-110-08-1-0

Features

- Pointed shape enables user to reach into angles and corners.
- Edges are tapered towards the point with surfaces being parallel.
- File surfaces is double cut while the edges are single cut.

BAHCO

WARDING FILE

Engineering File

Product Code	Length (Inch)	Width (Inch)	Height (Inch)	Teeth Per Inch (TPI)	Type of Cut
Without handle					
1-111-04-1-0	4	25/64	3/64	43	Bastard
1-111-04-2-0	4	25/64	3/64	56	Second
1-111-04-3-0	4	25/64	3/64	71	Smooth
1-111-06-1-0	6	19/32	5/64	36	Bastard
1-111-06-2-0	6	19/32	5/64	46	Second
1-111-06-3-0	6	19/32	5/64	56	Smooth
1-111-08-1-0	8	25/32	3/32	25	Bastard
1-111-08-2-0	8	25/32	3/32	36	Second
1-111-08-3-0	8	25/32	3/32	36	Smooth

1-111-08-1-0

Features

- Designed for filing narrow grooves, and passages such as filing cuts on keys.
- Edges are tapered towards the point with surfaces being parallel.
- File surfaces is double cut while the edges are single cut.

ergo

1-143-10-1-2

1-143-10-1-0

BAHCO

MILL FILE (USA TYPE)-TWO FLAT EDGES

Engineering File

Product Code	Length (Inch)	Width (Inch)	Height (Inch)	Teeth Per Inch (TPI)	Type of Cut
With Bi-Molded Ergo® Handle					
1-143-06-1-2	6	5/8	7/64	48	Bastard
1-143-08-1-2	8	25/32	1/8	44	Bastard
1-143-10-1-2	10	1	1 43/64	40	Bastard
Without handle					
1-143-04-1-0	4	7/16	5/64	53	Bastard
1-143-04-2-0	4	7/16	5/64	62	Second
1-143-04-3-0	4	7/16	5/64	75	Smooth
1-143-06-1-0	6	5/8	7/64	48	Bastard
1-143-06-2-0	6	5/8	7/64	53	Second
1-143-06-3-0	6	5/8	7/64	62	Smooth
1-143-08-1-0	8	25/32	1/8	44	Bastard
1-143-08-2-0	8	25/32	1/8	48	Second
1-143-08-3-0	8	25/32	1/8	57	Smooth
1-143-10-1-0	10	1	5/32	40	Bastard
1-143-10-2-0	10	1	5/32	44	Second
1-143-10-3-0	10	1	5/32	53	Smooth
1-143-12-1-0	12	1 13/16	3/16	37	Bastard
1-143-12-2-0	12	1 13/16	3/16	40	Second
1-143-12-3-0	12	1 13/16	3/16	48	Smooth
1-143-14-1-0	14	1 3/8	15/64	37	Bastard
1-143-14-2-0	14	1 3/8	15/64	40	Second
1-143-14-3-0	14	1 3/8	15/64	48	Smooth

Features

- Surfaces and edges are single cut.
- Suitable for engineering and sharpening file applications.
- Can be used for polishing and deburring work in lathes.
- Widely used for sharpening tools and implements such as spades, shovels, hoes, scrapers, etc.

1-143-10-1-0

BAHCO

PLASTIC CUT FILE

Engineering File

Product Code	Length (Inch)	Width (Inch)	Height (Inch)	Teeth Per Inch (TPI)	Type of Cut
Without handle					
1-145-12-0-0	12	31/32	13/64	39	Smooth
1-145-14-0-0	14	1 11/64	3/16	23	Second

Features

- Designed for fast and easy cutting on plastic laminates. Excellent for edge finishing. Single cut.

BAHCO

SQUARE FILE

Engineering File

Product Code	Length (Inch)	Width (Inch)	Height (Inch)	Teeth Per Inch (TPI)	Type of Cut
With Bi-Molded Ergo® Handle					
1-160-06-1-2	6	15/32	15/64	33	Bastard
1-160-06-2-2	6	15/32	15/64	46	Second
1-160-08-1-2	8	5/16	5/16	25	Bastard
1-160-08-2-2	8	5/16	5/16	36	Second
1-160-10-1-2	10	25/64	23/64	23	Bastard
Without handle					
1-160-04-1-0	4	11/64	11/64	43	Bastard
1-160-04-2-0	4	11/64	11/64	56	Second
1-160-04-3-0	4	11/64	11/64	71	Smooth
1-160-06-1-0	6	15/32	15/64	33	Bastard
1-160-06-2-0	6	15/32	15/64	46	Second
1-160-06-3-0	6	15/32	15/64	56	Smooth
1-160-08-1-0	8	5/16	5/16	25	Bastard
1-160-08-2-0	8	5/16	5/16	36	Second
1-160-08-3-0	8	5/16	5/16	46	Smooth
1-160-10-1-0	10	25/64	23/64	23	Bastard
1-160-10-2-0	10	25/64	23/64	30	Second
1-160-10-3-0	10	25/64	23/64	41	Smooth
1-160-12-1-0	12	15/32	15/32	20	Bastard
1-160-12-2-0	12	15/32	15/32	28	Second

Features

- Designed for filing grooves, rectangular holes, inside corners and for fine-adjustments of cutting tools.
- Surfaces are tapered towards the point and has a double cut.

ergo

1-160-10-1-2

1-160-10-1-0

BAHCO

THREE SQUARE FILE

Engineering File

Product Code	Length (Inch)	Width (Inch)	Height (Inch)	Teeth Per Inch (TPI)	Type of Cut
With Bi-Molded Ergo® Handle					
1-170-06-2-2	6	7/16	7/16	46	Second
1-170-08-1-2	8	5/8	5/8	25	Bastard
1-170-08-2-2	8	5/8	5/8	36	Second
1-170-10-1-2	10	11/16	11/16	23	Bastard
Without handle					
1-170-04-3-0	4	1/4	1/4	71	Smooth
1-170-06-1-0	6	7/16	7/16	33	Bastard
1-170-06-2-0	6	7/16	7/16	46	Second
1-170-06-3-0	6	7/16	7/16	56	Smooth
1-170-08-1-0	8	5/8	5/8	25	Bastard
1-170-08-2-0	8	5/8	5/8	36	Second
1-170-08-3-0	8	5/8	5/8	46	Smooth
1-170-10-1-0	10	11/16	11/16	23	Bastard
1-170-10-2-0	10	11/16	11/16	30	Second
1-170-10-3-0	10	11/16	11/16	41	Smooth

Features

- Ideal for deburring and filing angles and inner corners. Can be used for filing of holes, large fillets and concave surfaces.
- Shaped in an equilateral triangle that tapers towards the point and has double surface cuts.

ergo

1-170-10-1-2

1-170-10-1-0

ergo

BAHCO

HALF-ROUND FILE

Engineering File

Product Code	Length (Inch)	Width (Inch)	Height (Inch)	Teeth Per Inch (TPI)	Type of Cut
With Bi-Molded Ergo® Handle					
1-210-06-1-2	6	5/8	3/16	33	Bastard
1-210-06-2-2	6	5/8	5/8	46	Second
1-210-08-1-2	8	13/16	13/16	25	Bastard
1-210-08-2-2	8	13/16	13/16	36	Second
1-210-10-1-2	10	1 3/64	1 3/64	23	Bastard
1-210-10-2-2	10	1 3/64	1 3/64	30	Second
1-210-12-1-2	12	1 7/32	1 7/32	20	Bastard
Without handle					
1-210-04-1-0	4	25/64	1/8	43	Bastard
1-210-04-2-0	4	25/64	1/8	56	Second
1-210-04-3-0	4	25/64	1/8	71	Smooth
1-210-06-1-0	6	5/8	3/16	33	Bastard
1-210-06-2-0	6	5/8	5/8	46	Second
1-210-06-3-0	6	5/8	5/8	56	Smooth
1-210-08-1-0	8	13/16	13/16	25	Bastard
1-210-08-2-0	8	13/16	13/16	36	Second
1-210-08-3-0	8	13/16	13/16	46	Smooth
1-210-10-1-0	10	1 3/64	1 3/64	23	Bastard
1-210-10-2-0	10	1 3/64	1 3/64	30	Second
1-210-10-3-0	10	1 3/64	1 3/64	41	Smooth
1-210-12-1-0	12	1 7/32	1 7/32	20	Bastard
1-210-12-2-0	12	1 7/32	1 7/32	28	Second
1-210-12-3-0	12	1 7/32	1 7/32	36	Smooth
1-210-14-1-0	14	1 3/8	1 3/8	18	Bastard

1-210-10-1-2

1-210-10-1-0

Features

- Used for filing concave and flat surfaces as well as large holes and deburring requirements. Edges and surfaces are tapered towards the point and has double surface cuts.

ergo

BAHCO

ROUND FILE

Engineering File

Product Code	Length (Inch)	Width (Inch)	Height (Inch)	Teeth Per Inch (TPI)	Type of Cut
With Bi-Molded Ergo® Handle					
1-230-06-1-2	6	15/32	-	33	Bastard
1-230-06-2-2	6	15/32	-	46	Second
1-230-08-1-2	8	5/16	-	25	Bastard
1-230-08-2-2	8	5/16	-	36	Second
1-230-10-1-2	10	25/64	-	23	Bastard
1-230-10-2-2	10	25/64	-	30	Second
Without handle					
1-230-04-1-0	4	9/64	-	43	Bastard
1-230-04-2-0	4	9/64	-	56	Second
1-230-04-3-0	4	9/64	-	71	Smooth
1-230-06-1-0	6	15/32	-	33	Bastard
1-230-06-2-0	6	15/32	-	46	Second
1-230-06-3-0	6	15/32	-	56	Smooth
1-230-08-1-0	8	5/16	-	25	Bastard
1-230-08-2-0	8	5/16	-	36	Second
1-230-08-3-0	8	5/16	-	46	Smooth
1-230-10-1-0	10	25/64	-	23	Bastard
1-230-10-2-0	10	25/64	-	30	Second
1-230-10-3-0	10	25/64	-	41	Smooth
1-230-12-1-0	12	15/32	-	20	Bastard
1-230-12-2-0	12	15/32	-	28	Second
1-230-12-3-0	12	15/32	-	36	Smooth

1-230-10-1-2

1-230-10-1-0

Features

- Regularly used for filing holes, large fillets and concave surfaces. File is tapered to a point and has a double cut.

BAHCO

KNIFE FILE

Engineering File

Product Code	Length (Inch)	Width (Inch)	Height (Inch)	Teeth Per Inch (TPI)	Type of Cut
Without handle					
1-250-08-1-0	8	3/4	13/16	30	Bastard

1-250-06-1-0

Features

- Designed for filing narrow passages in cutting and punching tools, deburring narrow grooves and flanks on gear teeth.

BAHCO

DIAGONAL FILE

Engineering File

Product Code	Length (Inch)	Width (Inch)	Height (Inch)	Teeth Per Inch (TPI)	Type of Cut
Without handle					
1-320-10-2-0	10	31/32	3/16	14	Second
1-320-12-2-0	12	1 11/64	7/32	12	Second

1-320-10-2-0

Features

- Material removal is much higher in certain materials than with cut files. The shape of the teeth makes the diagonal file especially suitable for soft steel, stainless steel, light metal alloys and hard plastic.

BAHCO

ergo

3 PIECE ENGINEERING FILE SET 1-473-06-2-2

With Bi-Molded Ergo Handle - Contents Include:

Description	Length (Inch)	Type of Cut
Hand Second	8	Second
Half Round Second	8	Second
Round Second	8	Second

1-473-06-2-2

Features

- Files are smooth, double cut and designed for the fine filing and polishing applications.
- Supplied with plastic roll-up pouch with tie.

1-478-08-1-2

5 PIECE ENGINEERING FILE SET 1-478-08-1-2

With Bi-Molded Ergo Handle - Contents Include:

Description	Length (Inch)	Type of Cut
Hand Bastard	8	Bastard
Hand Second	8	Second
Square Bastard	8	Bastard
Half Round Bastard	8	Bastard
Round Bastard	8	Bastard

Features

- Files are smooth, double cut and designed for the fine filing and polishing applications.
- Supplied with plastic roll-up pouch with tie.

1-476-04-3-2

6 PIECE ENGINEERING FILE SET 1-476-04-3-2

Plastic Handled Files - Contents Include:

Description	Length (Inch)	Type of Cut
Hand Smooth	4	Smooth
Warding Smooth	4	Smooth
Square Smooth	4	Smooth
Three Square Smooth	4	Smooth
Half Round Smooth	4	Smooth
Round Smooth	4	Smooth

Features

- Files are smooth, double cut and designed for the fine filing and polishing applications.
- Supplied with plastic pouch.

2-300-14-0-0

HAND NEEDLE FILES

Product Code	Length (Inch)	Teeth Per Inch (TPI)	Type of Cut
Without handle			
2-300-14-0-0	5 ½	56	Bastard
2-300-14-2-0	5 ½	86	Smooth
2-300-14-4-0	5 ½	122	Dead Smooth
2-300-16-0-0	6 ¼	56	Bastard
2-300-16-1-0	6 ¼	66	Second
2-300-16-2-0	6 ¼	86	Smooth
2-300-16-4-0	6 ¼	122	Dead Smooth
2-300-18-0-0	7	56	Bastard
2-300-18-2-0	7	86	Smooth

Features

- Perfect for fine filing and polishing jobs. Used by engravers, precision engineers, instrument makers, watchmakers and goldsmiths.
- Edges and surfaces are parallel. Surfaces double cut, edges single cut.

BAHCO

FLAT NEEDLE FILES

Product Code	Length (Inch)	Teeth Per Inch (TPI)	Type of Cut
Without handle			
2-301-14-0-0	5 ½	56	Bastard
2-301-14-2-0	5 ½	86	Smooth
2-301-14-4-0	5 ½	122	Dead Smooth
2-301-16-0-0	6 ¼	56	Bastard
2-301-16-1-0	6 ¼	66	Second
2-301-16-2-0	6 ¼	86	Smooth
2-301-16-4-0	6 ¼	122	Dead Smooth
2-301-18-2-0	7	86	Smooth

2-301-14-0-0

Features
- Perfect for fine filing and polishing jobs. Used by engravers, precision engineers, instrument makers, watchmakers and goldsmiths.
- Surfaces parallel, edges taper to a point. Surfaces double cut, edges single cut.

BAHCO

THREE SQUARE NEEDLE FILES

Product Code	Length (Inch)	Teeth Per Inch (TPI)	Type of Cut
Without handle			
2-302-14-0-0	5 ½	56	Bastard
2-302-14-2-0	5 ½	86	Smooth
2-302-14-4-0	5 ½	102	Dead Smooth
2-302-16-0-0	6 ¼	56	Bastard
2-302-16-1-0	6 ¼	66	Second
2-302-16-2-0	6 ¼	86	Smooth
2-302-16-4-0	6 ¼	122	Dead Smooth
2-302-18-0-0	7	56	Bastard
2-302-18-2-0	7	86	Smooth

2-302-14-0-0

Features
- Perfect for fine filing and polishing jobs. Used by engravers, precision engineers, instrument makers, watchmakers and goldsmiths.
- Triangular, surfaces taper to a point. Surfaces double cut.

BAHCO

SQUARE NEEDLE FILES

Product Code	Length (Inch)	Teeth Per Inch (TPI)	Type of Cut
Without handle			
2-303-14-2-0	5 ½	86	Smooth
2-303-14-4-0	5 ½	122	Dead Smooth
2-303-16-0-0	6 ¼	56	Bastard
2-303-16-1-0	6 ¼	66	Second
2-303-16-2-0	6 ¼	86	Smooth
2-303-16-4-0	6 ¼	122	Dead Smooth
2-303-18-0-0	7	56	Bastard
2-303-18-2-0	7	86	Smooth

2-303-14-2-0

Features
- Perfect for fine filing and polishing jobs. Used by engravers, precision -engineers, instrument makers, watchmakers and goldsmiths.
- Square shape, surface tapered to a point. Surfaces double cut.

2-304-14-0-0

HALF ROUND NEEDLE FILES

Product Code	Length (Inch)	Teeth Per Inch (TPI)	Type of Cut
Without handle			
2-304-14-0-0	5 ½	56	Bastard
2-304-14-2-0	5 ½	86	Smooth
2-304-14-4-0	5 ½	122	Dead Smooth
2-304-16-0-0	6 ¼	56	Bastard
2-304-16-1-0	6 ¼	66	Second
2-304-16-2-0	6 ¼	86	Smooth
2-304-16-4-0	6 ¼	122	Dead Smooth
2-304-18-0-0	7	56	Bastard
2-304-18-2-0	7	86	Smooth

Features

- Perfect for fine filing and polishing jobs. Used by engravers, precision engineers, instrument makers, watchmakers and goldsmiths.
- Surfaces taper to a point. Flat and convex surfaces double cut.

2-470

6 PIECE NEEDLE FILE SETS

Plastic Handled Files

Product Code	Length (Inch)	Teeth Per Inch (TPI)	Type of Cut
Without handle			
2-470-14-2-0	5 ½	56	Smooth
2-470-14-4-0	5 ½	122	Dead Smooth
2-470-16-1-0	6 ¼	66	Second

Features

- Set of 6 files in snap-shut plastic wallet with hanging hole.
- Contains one file each of: hand, flat, half round, round, three square and square.
- Includes one handle 9-488-02-10.

2-471

9 PIECE NEEDLE FILE SET 2-471-16-1-0

Plastic Handled File - Contents Include:

Description	Length (Inch)	Type of Cut
Hand	6 ¼	Second
Flat	6 ¼	Second
Half Round	6 ¼	Second
Round	6 ¼	Second
Three Square	6 ¼	Second
Square	6 ¼	Second
Oval	6 ¼	Second
Crossing	6 ¼	Second
Knife	6 ¼	Second

Features

- Set of 9 files in snap-shut plastic wallet with hanging hole.
- Includes one handle 9-488-02-10.

BAHCO

12 PIECE NEEDLE FILE SETS

Plastic Handled Files

Product Code	Length (Inch)	Teeth Per Inch (TPI)	Type of Cut
2-472-14-2-0	5 ½	86	Smooth
2-472-16-0-0	6 ¼	56	Bastard
2-472-16-1-0	6 ¼	66	Second
2-472-16-2-0	6 ¼	86	Smooth

Features

- Set of 12 files in snap-shut plastic wallet with hanging hole.
- Contains one file each of: hand, flat, three square, square, half round, crossing, round, knife, barrette, slitting, round-edge joint and marking.
- Includes one handle 9-488-02-10.

2-472

BAHCO

MILL SAW FILE

Engineering Files

Product Code	Length (Inch)	Width (Inch)	Height (Inch)	Teeth Per Inch (TPI)	Type of Cut
Without handle - One Round Edges					
4-138-08-1-0	8	25/32	1/8	46	Bastard
4-138-10-1-0	10	1	5/32	41	Bastard
4-138-12-1-0	12	1 13/16	3/16	36	Bastard
Without handle - Two Round Edges					
4-140-06-1-0	6	5/8	7/64	46	Bastard
4-140-08-1-0	8	25/32	1/8	41	Bastard
4-140-10-1-0	10	1	5/32	36	Bastard

Features

- Designed for circular, felling and gang saws with fine toothing, including bandsaws. Excels at draw and fine filing, polishing and deburring work.
- Used in the engineering industry as a lathe and deburring file.
- File is parallel and thin with surface and edge having single cut and one round edge.

4-138-10-1-0

4-140-10-1-0

BAHCO

FLAT CHISEL BIT FILE

Engineering File

Product Code	Length (Inch)	Width (Inch)	Height (Inch)
4-150-07-3-0	7	½	1/8

Features

- Designed for filing of square ground cutters.
- File is flat.

4-150-07-3-0

ergo

BAHCO

HOMEOWNER'S FILE - FOR WOOD

With Bi-Molded Ergo Handle

Product Code	Length (Inch)	Width (Inch)	Height (Inch)	Teeth Per Inch (TPI)	Type of Cut
4-152-08-2-2	8	1	5/32	41 + 36	Bastard + Second

Features

- File has both rasp and double cut.
- Rasp cut is for rough filing of wood, plywood, soft plastic, etc.
- Double cut is for fine filing of metals, iron, plastics, etc.
- File is flat and parallel with two flat, uncut edges - one side bastard rasp cut and the other side double second cut.

4-152-08-2-2

ergo

BAHCO

HOMEOWNER'S FILE - FOR METAL

With Bi-Molded Ergo Handle

Product Code	Length (Inch)	Width (Inch)	Height (Inch)	Teeth Per Inch (TPI)	Type of Cut
4-153-08-1-2	8	1	5/32	25 + 41	Bastard + Second

Features

- File has both double and single cut.
- Double cut for rough sharpening of edges on spades, hoes, mower blades, axes, etc.
- Single cut for fine sharpening of edges on same above tools and also knives and scissors.
- File is flat and parallel with two flat, uncut edges - one side bastard double rasp cut and the other side single second cut.

4-153-08-1-2

BAHCO

HOMEOWNER'S FILE - SET 4-154-08-2-2

With Bi-Molded Ergo Handle

Product Code	Length (Inch)	Width (Inch)	Height (Inch)	Teeth Per Inch (TPI)	Type of Cut
4-154-08-2-2	8	1	5/32	25 + 36 + 41	Bastard + Second

Features

- Set contains one 4-152 Homeowner's file for wood and one 4-153 Homeowner's file for metal.

ergo

4-154-08-2-2

BAHCO

FARMER'S DOUBLE DUTY FILE

Handle has a hole for hanging.

Product Code	Length (Inch)	Width (Inch)	Height (Inch)	Teeth Per Inch (TPI)	Type of Cut
4-155-08-2-0	8	1	5/32	23	Second
4-155-10-2-0	10	1 13/16	7/32	18	Second

Features

- File is both double and single cut.
- Double cut is for filing flat surfaces and for rough sharpening of edges on spades, hoes, etc.
- Single cut is for fine filing of flat surfaces and for fine sharpening of tools and implements.
- File has parallel edges with one being uncut - one side is double cut bastard and the other side is single cut bastard.

4-155-10-2-0

BAHCO

SHARPENING FILES - TAPER SAW FILE

Sharpening File

ergo

With Bi-Molded Ergo Handle

Product Code	Length (Inch)	Width (Inch)	Height (Inch)	Teeth Per Inch (TPI)	Type of Cut
4-183-04-2-2	4	21/64	-	51	Second
4-183-05-2-2	5	13/32	-	48	Second
4-183-06-2-2	6	15/32	-	43	Second

Without handle

Product Code	Length (Inch)	Width (Inch)	Height (Inch)	Teeth Per Inch (TPI)	Type of Cut
4-183-06-2-0	6	15/32	-	43	Second
4-183-07-2-0	7	1/2	-	41	Second
4-183-08-2-0	8	19/32	-	38	Second
4-183-10-2-0	10	21/32	-	36	Second

Features

- Designed for sharpening saws with cross toothing and teeth at 60° angle.
- File is triangular with edges tapering towards the point with surface and edges single cut.

4-183-04-2-2

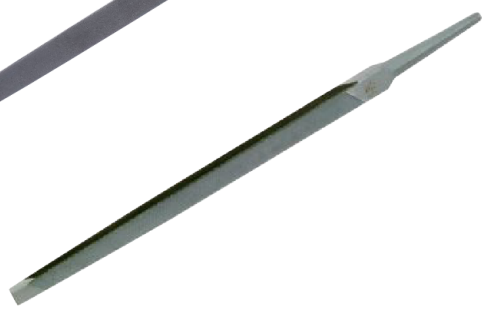

4-183-06-2-0

ergo

BAHCO

SLIM TAPER FILE

Sharpening File

Product Code	Length (Inch)	Width (Inch)	Height (Inch)	Teeth Per Inch (TPI)	Type of Cut
With Bi-Molded Ergo Handle					
4-186-04-2-2	4	15/64	-	58	Second
4-186-05-2-2	5	9/32	-	56	Second
4-186-06-2-2	6	21/64	-	51	Second
Without Handle					
4-186-04-2-0	4	15/64	-	58	Second
4-186-05-2-0	5	9/32	-	56	Second
4-186-06-2-0	6	21/64	-	51	Second
4-186-07-2-0	7	25/64	-	48	Second
4-186-08-2-0	8	1/2	-	43	Second

Features

- Used for sharpening of all types of saws with fine cross toothing.
- File is triangular with edges tapering towards the point with surface and edges single cut.

4-186-04-2-2

4-186-04-2-0

ergo

BAHCO

EXTRA SLIM TAPER FILE

Sharpening File

Product Code	Length (Inch)	Section (Inch)	Teeth Per Inch (TPI)	Type of Cut
With Bi-Molded Ergo Handle				
4-187-06-2-2	6	9/32	56	Second
Without Handle				
4-187-04-2-0	4	13/64	66	Second
4-187-06-2-0	6	9/32	56	Second
4-187-07-2-0	7	21/64	53	Second
4-187-08-2-0	8	3/8	53	Second
4-287-06-2-0	6	9/32	56	Double Cut

Features

- Used for sharpening of all types of saws with fine cross toothing.
- File is triangular with edges tapering towards the point. Surfaces are single cut on 4-187 and double cut on 4-287. Edges are single cut. Section figures indicate the largest width of the file section.

4-187-05-2-2

4-187-04-2-0

BAHCO

DOUBLE EXTRA SLIM TAPER

Sharpening File

Product Code	Length (Inch)	Section (Inch)	Teeth Per Inch (TPI)	Type of Cut
Without Handle				
4-188-06-2-0	6	15/64	61	Second
4-288-06-2-0	6	15/64	61	Second

Features

- Used for sharpening of all types of saws with fine cross toothing.
- Triangular, with edges tapering towards the point. Surfaces are single cut on 4-188 and double cut on 4-288. Edges are single cut. Width figures indicate the largest width of the file section.

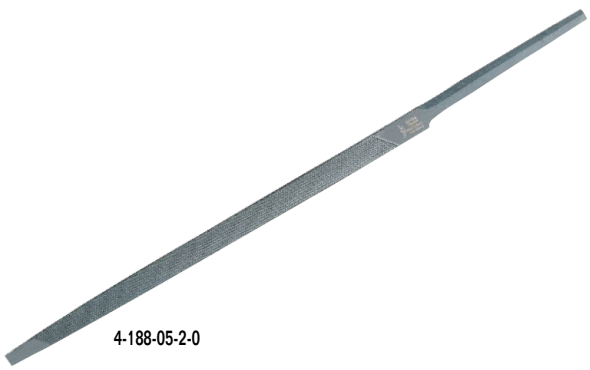

4-188-05-2-0

BAHCO

DOUBLE EDGE SAW FILE - "WASA"

Sharpening Files

Product Code	Length (Inch)	Width (Inch)	Height (Inch)	Teeth Per Inch (TPI)	Type of Cut
Without handle					
4-272-06-3-0	6	5/8	5/32	58	Smooth

Features

- For sharpening saws with straight, fine toothing. Note that saws with hardened tooth points cannot be sharpened with a file!
- Parallel, rhombic. Surfaces and edges single cut. Tooth style 'A'.

4-272-06-3-0

BAHCO

HALF ROUND RASPS

ergo

Rasps

Product Code	Length (Inch)	Width (Inch)	Height (Inch)	Teeth Per Inch (TPI)	Type of Cut
With Bi-Molded Ergo Handle					
6-342-08-1-2	8	51/64	1/4	64	Coarse
6-342-08-2-2	8	51/64	1/4	104	Medium
Without handle					
6-342-08-1-0	8	51/64	1/4	64	Coarse
6-342-10-1-0	10	15/16	5/16	51	Coarse
6-342-12-1-0	12	1 3/16	25/64	38	Coarse

Features

- Designed for work in wood, plywood, wall board, plastics and other soft materials.
- File's edges and surfaces are tapered towards the point with surfaces rasp cut and edges single cut.

6-342-08-1-2

6-342-08-1-0

BAHCO

CABINET RASPS

Rasps

Product Code	Length (Inch)	Width (Inch)	Height (Inch)	Teeth Per Inch (TPI)	Type of Cut
Without handle					
6-343-08-3-0	8	7/8	7/32	142	Fine
6-343-10-3-0	10	1 1/16	15/64	117	Fine

Features

- Designed for work in wood, plywood, wall board, plastics and other soft materials.
- File is thin and half round edges and surfaces tapered towards the point. Surface is rasp cut and edges are single cut.

6-343-08-3-0

ergo BAHCO

HAND RASPS

Rasps

Product Code	Length (Inch)	Width (Inch)	Height (Inch)	Teeth Per Inch (TPI)	Type of Cut
With Bi-Molded Ergo Handle					
6-344-08-2-2	8	5 1/64	1/4	104	Medium

6-344-08-2-2

Features

- Designed for work in wood, plywood, wall board, plastics and other soft materials.
- File's edges and surfaces are parallel with surface rasp cut and one edge single cut.

ergo BAHCO

ROUND RASP

Rasps

Product Code	Length (Inch)	Width (Inch)	Height (Inch)	Teeth Per Inch (TPI)	Type of Cut
With Bi-Mold Ergo Handle					
6-345-08-2-2	8	23/64	23/64	104	Medium

6-345-08-2-2

Features

- Designed for work in wood, plywood, wall board, plastics and other soft materials.
- File is round and rasped towards the point.

ergo BAHCO

FILEMASTER

Rasps

Product Code	Length (Inch)	Width (Inch)	Height (Inch)	Teeth Per Inch (TPI)
With Bi-Molded Ergo Handle				
FM10	10	29/32	7/32	9 + 13

FM10

Features

- Designed for shear cuts on steel, plastics, laminates and hard woods. Also good for finishing in most materials.
- Has curved teeth for fast removal of soft metals, lead, aluminum, soft woods and fillers.
- The edges are parallel and uncut, and the surface has milled teeth - one side shear cut and one side curved teeth.
- File coated with a protective layer of paint.

BAHCO

HALF ROUND FILEMASTER

Rasps

Product Code	Length (Inch)	Width (Inch)	Height (Inch)	Teeth Per Inch (TPI)
With Bi-Molded Ergo Handle				
HRFM10	10	29/32	3/16	13

ergo

HRFM10

Features
- Designed for filing concave and flat surface, and large holes.
- Has curved teeth for fast removal of soft metals, lead, aluminum, soft woods and fillers.
- Edges are tapered towards the point and are uncut. Half round surface are milled, curved teeth and concave back is uncut.
- File coated with a protective layer of paint.

BAHCO

FILE CLEANER

Accessories

Product Code
9-467-00-0-0

9-467-00-0-0

Features
- In order to ensure a good filing result, files should periodically be cleanedduring use.
- Has bristles on one side and a card of steel wire on the other.
- Use the brush to clear clogged teeth. Doing this regularly will improve the stock removal efficiency of the file, and extend its useful life.

BAHCO

ROUND CHAIN SAW FILES

Chain Saw Files

Product Code	Length	Dimension (Inch)
Each file is packed in a skin-pack, which can be used as a protective sleeve.		
168-6-3.2-1P	6	1/8
168-6-3.5-1P	6	9/64
168-8-4.0-1P	8	5/32
168-8-4.5-1P	8	11/64
168-8-4.8-1P	8	3/16
168-8-5.2-1P	8	13/64
168-8-5.5-1P	8	7/32
168-8-6.3-1P	8	1/4
Files are packed in 3 piece protective skin-pack, with perforation for easy separation.		
168-8-4.0-3P	8	5/32
168-8-4.8-3P	8	3/16
168-8-5.5-3P	8	7/32
Files are packed in 6 per paper box.		
168-8-4.0-6	8	5/32
168-8-4.5-6	8	11/64
168-8-4.8-6	8	3/16
168-8-5.2-6	8	13/64
168-8-5.5-6	8	7/32

1 Piece Per Package
168-6-3.5-1P

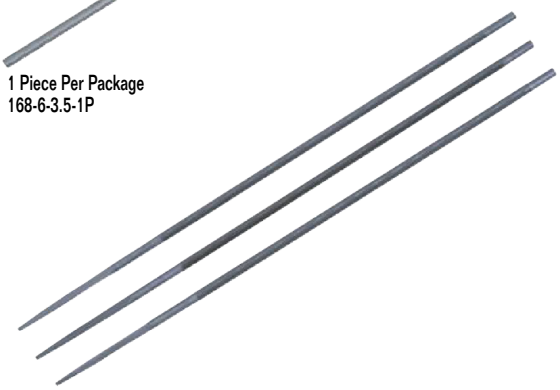

3 Pieces Per Package
168-8-4.0-3P

Features
- For sharpening of the cutting tooth on the saw chain.

166-6-166-2.5-12

FLAT CHAIN SAW FILE

Chain Saw File

Product Code	Length (Inch)	Width (Inch)	Height (Inch)
With Bi-Mold Ergo Handle			
166-6-166-2.5-12	6	5/8	3/32

Features

- Designed for filing of depth gauges on saw chains and for sharpening of brush cutter blades.
- File is parallel flat with round uncut edges.

FILE HANDLES

Bi-Molded Ergo Handles

Product Code	Handle Number	Packaging
Designed for files of rectangular shape (flat, hand, etc) and for half round files.		
9-485-06-1P	06	Individual
9-485-09-1P	09	Individual
9-485-13-1P	13	Individual
9-485-06-10	06	10-Pack
9-485-09-10	09	10-Pack
9-485-13-10	13	10-pack
Designed for shaped files (round, square, three square, etc.)		
9-486-04-1P	04	Individual
9-486-05-1P	05	Individual
9-486-07-1P	07	Individual
9-486-04-10	04	10-Pack
9-486-05-10	05	10-Pack

Features

- Ergonomically shaped bi-molded plastic handle provides soft, textured grip for comfort and control.
- The end covers the file tang and shoulder for safe and comfortable grip.

9-484

PLASTIC FILE HANDLES

Comfortable Grip

Product Code	Handle Number	Packaging
Files are packed in 6 per paper box.		
9-484-3.2-1P	3.2	Individual
9-484-5.2-1P	5.2	Individual
9-484-3.2-10	3.2	10-Pack
9-484-5.2-10	5.2	10-Pack

Features

- The end covers the file tang and shoulder for safe and comfortable grip.
- Plastic file handles designed for small sized files.

BAHCO

ROUND CHAIN SAW FILE HANDLES

ergo

Product Code	Handle Number	Type	Packaging
9-486-C-10	C	ERGO	10 pieces
9-486-C-1P	C	ERGO	1 piece
PH-6604-1P			1 piece
PH-6604-25			25 pieces

Features

- Handle 9-486 is ergonomically shaped bi-molded plastic handle that provides soft, textured grip for comfort and control.
- Handle PH-6604 is an all plastic handle designed for 8 inch round chain saw files with 3 integrated angle guides.

9-486

PH-6604

BAHCO

FILE HANDLE SELECTION GUIDE

Engineering, Rasp and Milled Files

Product Code	4"	5"	6"	7"	8"	12"
1-106				09	09	13
1-110			05	09	09	13
1-111			04			
1-143			04	09	06	13
1-160	3.2		04	07	05	08
1-170	3.2		04	07	07	08
1-210	5.2		05	09	09	13
1-230	3.2		04	07	05	08
1-320				09	09	13
FM10				09		
HRFM10				06		
6-342			06	09	09	13
6-343				09	06	
6-344				09	09	
6-345				07	05	

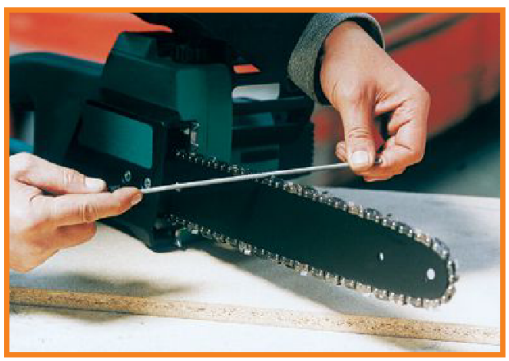

Sharpening Files

Product Code	4"	5"	6"	7"	8"	12"
166			C			
4-138			04	09	06	13
4-152					09	
4-153					09	
4-183	5.2	04	04	07	07	
4-186	3.2	3.2	04	04	04	
4-187		3.2	3.2	04	04	
4-188		3.2	3.2	3.2	04	
4-270		05	09			
4-272		05	05			

HSSG-G1225M

HSSG-M1227M

HSSG-A1225M

HSSG-C1225M

HSSG-N1230M

HSSG-E1222M

HSSG-O1218M

HSSG-P1230M

HSSG-D1211M

BAHCO

ROTARY BURRS

Arch Pointed Nose

Product Code	Diameter Of Head	Length of Head	Toothing
HSSG-G0618M	1/4	1 1/16	Medium
HSSG-G1220M	1/2	3/4	Medium
HSSG-G1225EC	1/2	1	Extra Coarse
HSSG-G1225M	1/2	1	Medium
HSSG-F0618M	1/4	1 1/16	Medium
HSSG-F1225M	1/2	1	Medium
HSSG-F1625M	5/8	1	Medium

Conical Pointed Nose

Product Code	Diameter Of Head	Length of Head	Toothing
HSSG-M0618M	1/4	1 1/16	Medium
HSSG-M1227M	1/2	1 1/16	Medium

Cylindrical

Product Code	Diameter Of Head	Length of Head	Toothing
HSSG-A0616M	1/4	5/8	Medium
HSSG-A1020M	3/8	3/4	Medium
HSSG-A1225EC	1/2	1	Extra Coarse
HSSG-A1225M	1/2	1	Medium
HSSG-A1625M	5/8	1	Medium

Cylindrical Round Nose

Product Code	Diameter Of Head	Length of Head	Toothing
HSSG-C0616M	1/4	5/8	Medium
HSSG-C1020M	3/8	3/4	Medium
HSSG-C1225EC	1/2	1	Extra Coarse
HSSG-C1225M	1/2	1	Medium

Inverted Cone

Product Code	Diameter Of Head	Length of Head	Toothing
HSSG-N1230M	1/2	1 3/16	Medium

Oval

Product Code	Diameter Of Head	Length of Head	Toothing
HSSG-E0614M	1/4	9/16	Medium
HSSG-E1222EC	1/2	7/8	Extra Coarse
HSSG-E1222M	1/2	7/8	Medium
HSSG-E1625M	5/8	1	Medium

Oval Pointed Nose

Product Code	Diameter Of Head	Length of Head	Toothing
HSSG-O1218M	1/2	1 1/16	Medium

Pear

Product Code	Diameter Of Head	Length of Head	Toothing
HSSG-P0622M	1/4	7/8	Medium
HSSG-P1230M	1/2	1 3/16	Medium

Spherical

Product Code	Diameter Of Head	Length of Head	Toothing
HSSG-D0606M	1/4	1/4	Medium
HSSG-D0807M	5/16	1/4	Medium
HSSG-D1009M	3/8	3/8	Medium
HSSG-D1211EC	1/2	7/16	Extra Coarse
HSSG-D1211M	1/2	7/16	Medium
HSSG-D1614M	5/8	9/16	Medium

Features

- High Speed Steel burrs used for deburring soft steel, bronze, and brass.
- Used to deburr irregular objects and finishing work inside a confined space.
- Medium Toothing for machining unhardened steel and other moderately hard materials under normal conditions
- Extra Coarse Toothing for soft materials when good stock removal is required. Counteracts chip build-up between teeth.

BAHCO

ergo

SCRAPERS

Ergo Carbide Blade Scrapers

Product Code	Length (Inch)	Blade Included:
625	11	# 449 Triangle Shaped Carbide Blade
650	12	# 442 - 2" Carbide Blade
665	12	# 451 -2 1/2" Carbide Blade

Features

- Two-component handle provides better grip and comfort during use.
- Scrapers for use on all kinds of surfaces for removal of paint, glue, varnish, rust, gaskets, chalk, grout, mortar, etc.
- Four interchangeable carbide blades for precision work are available for different surface applications.
- 625 Scraper comes with convenient plastic holder.
- The heavy duty scraper head for models 650 and 665 is designed for wide material removal when extra strength is required.
- Scraper 665 comes with large plastic knob for two-handed operation for heavy duty use.
- Blades stays sharp up to 50 times longer than conventional steel blades.

625

650

665

BAHCO

REPLACEMENT CARBIDE SCRAPER BLADES

Carbide Blades

Product Code	Length (Inch)	Description
449		Triangle Shape, for 625 Scraper
625-DROP		Drop Shape, for 625 Scraper
625-PEAR		Pear Shape, For 625 Scraper
625-ROUND		Round Shape, For 625 Scraper
442	2	For 650 and 665 Scrapers
451	2 1/2	For 650 and 665 Scrapers
850-1	2	Wavy for 650 and 665 Scrapers
865-1	2 1/2	Wavy for 650 and 665 Scrapers

Features

- Blades stays sharp up to 50 times longer than conventional steel blades.

449

442

GSC-12

WILLIAMS®

GASKET SCRAPER

Plastic Handle

Product Code	Blade Length (Inch)	Overall Length	Blade Width
GSC-12	8 7/8	13	1 1/2

Made in U.S.A.

Features
- Designed for removing gaskets and carbon.
- Comfortable four-sided yellow plastic handle.
- Blade coated to resist corrosion.

40000

WILLIAMS®

GASKET SCRAPER

Bi-Mold Comfort Grip Handle

Product Code	Blade Length (Inch)	Overall Length	Blade Width
40000	6	9 3/4	7/8

Features
- Bi-mold handle provides comfortable grip, reducing hand fatigue.
- Ideal for gasket removal and cleaning rust and corrosion.

474

BAHCO®

CABINET SCRAPERS

For carpentry work

Product Code	Length (Inch)
474-125-0.60	5
474-125-0.80	5
474-150-0.80	6

Features
- Blade of cold-rolled, hardened and tempered chrome-nickel steel. White plastic edge protector.

434-6

ergo®

BAHCO®

ERGO® CHISELS

High-Quality Steel

Product Code	Overall Length (Inch)	Blade Length (Inch)	Tip Width (Inch)
434-6	10 3/4	5 1/2	1/4
434-10	10 3/4	5 1/2	3/8
434-12	10 3/4	5 1/2	1/2
434-18	10 3/4	5 1/2	3/4
434-25	10 3/4	5 1/2	1
434-28	10 3/4	5 1/2	1 1/4
434-38	10 3/4	5 1/2	1 1/2

Set Includes:

Product Code	Description
434-S3-EUR	Chisels: 1/2, 3/4, 1 in a cardboard box
434-S6-EUR	Chisels: 1/4, 3/8, 1/2, 3/4, 1, 1 1/4 in a Wooden Box

434-S6-EUR

434-S3-EUR

holster

Features
- Two component ergonomic grip handle
- splitproof handle allows repeated hammer blows
- Safety guard and rounded shoulders for added security
- Precision ground blade for maximum sharpness
- Hardened and tempered for long lasting performace
- Honed and ready to use
- Polished blade for rust resistance
- Protective holster included

CARPENTER'S MORA MULTI PURPOSE KNIFE WITH HOLSTER

With Holster

Product Code	Description	Length (Inches)
2444	Carpenter's Mora Multi Purpose Knife with Holster	9

2444

Features
- Multi purpose knife with high quality steel and bi-component handle.
- Polished stainless steel blade.
- Two component handle for comfortable grip.
- Knife comes in plastic case with belt clip.
- Ideal for fishermen, hunters and for working in the garden.

WRECKING KNIFE

With Holster

Product Code	Description	Length (Inches)
2448	Wrecking Knife	9

2448

Features
- The wrecking chisel knife has been designed to be used like a regular chisel or when turned sideways a 4in wide knife.
- The blade is 4mm thick and made from hardened steel and can be used like a 4in chisel with a hammer on the back of the blade for added force.
- The handle has a curved guard to protect the knuckles while in use and can also be used with a hammer.
- The wrecking knife comes in handy for all those woodworking tasks.
- The knife comes complete with a holster with button clip.

MULTI TOOL

Compact multipurpose tool

Product Code	Description	Tools Included
MTT8674	Holster	10
MTT151	Nylon Pouch	18

MTT151

Features
- Loaded with the most versatile features, this multi tool is ready for work.
- Complete with a holder with a loop to fit any belt.
- Tools include scissors, ruler, cork screw, needle nose pliers.

SQUEEZE GRIP SAFETY KNIFE

Bi-Mold Comfort Grip Handle

Product Code	Description
SQZ150003	Squeeze Grip Safety Knife
SQZ150003-HSBL	12 Pack Hook Blades
SQZ150005-SBL	12 Pack Trapeze Blades

SQZ150003

Features
- Automatically loads new knife blade with the squeeze of the handle.
- Quick release button to remove blade.
- Includes: 6 heavy-duty blades.
- Comfort handle with thumb groove for greater control and comfort.

40058

WILLIAMS

FOLDING UTILITY KNIFE

Uses Heavy-Duty .025" Thick 2-Notch Blades

Product Code	Description
40058	Folding Utility Knife

Features
- Blade safely locks in place when open.
- Quick-change thumb stud release allows for easy blade replacement.
- Stainless steel clip secures knife on belt or in pocket.
- Includes (1) .025" blade.

40052

WILLIAMS

AUTOLOAD QUICK-BLADE UTILITY KNIFE

Includes Heavy-Duty .025" Thick 2-Notch Blades

Product Code	Description
40052	Autoload Quick-Blade Utility Knife

Features
- Blade is easily removed or reversed from the front with push-button ease.
- New blade is automatically loaded from 5-blade magazine.
- Spring-loaded cover makes reloading quick and tool-free.
- Includes (5) .025" blades.

40072

WILLIAMS

UTILITY KNIFE BLADES

Feature Heavy-Duty .025" Thick 2-Notch Blades

Product Code	Description
40072	Quickblade Dispenser Includes (100) .025" 2-Notch Blades
40076	.025" Hook Blades (100)
40078	5-Pack Carded 2-Notch Blades

Features
- Quickblade dispensers allow fast and safe blade handling, with convenient storage for used blades.

28307

WILLIAMS

STRAIGHT PATTERN TIN SNIPS

Double-Dipped Plastic Handles

Product Code	Overall Length (Inches)	Cutting Length (Inches)	Cutting Capacity (Cold-Rolled/Stainless)
28301	7	1 9/16	24 ga. CR / 32 ga. SS
28305	10	2	22 ga. CR / 28 ga. SS
28307	12	2 3/4	20 ga. CR / 24 ga. SS
28309	14	3	18 ga. CR /22 ga. SS

28351 2 Piece Straight Pattern Tin Snips Set in Vinyl Pouch

Contents Include:

Product Code	Description	Product Code	Description
28301	7" Tin Snips	28307	12" Tin Snips

Features
- Forged steel blades.
- Double-dipped handles provide comfortable grip, reducing hand fatigue.
- Cut straight lines and wide curves.
- Meet ANSI and DIN standards.

WILLIAMS®

AVIATION SNIPS

Bi-Mold Comfort Grip Handles

Product Code	Cutting Direction	Overall Length (Inches)	Cut Length (Inches)	Cutting Capacity (cold-rolled/stainless)
28201	Left	9 3/4	1 3/8	18 ga.CR / 22 ga.SS
28203	Right	9 3/4	1 3/8	18 ga.CR / 22 ga.SS
28205	Straight	9 13/16	1 1/2	18 ga.CR / 22 ga.SS

28251 3 Piece Aviation Snips Set in Vinyl Pouch

Contents Include:

Product Code	Description	Product Code	Description
28201	Left-cut snips	28205	Straight-cut snips
28203	Right-cut snips		

Features

- Color-coded handles help quickly identify the cutting direction.
- Bi-mold handles provide comfortable grip, reduces hand fatigue.
- Meet ANSI and DIN standards.

WILLIAMS®

OFFSET AVIATION SNIPS

Bi-Mold Comfort Grip Handles

Product Code	Cutting Direction	Overall Length (Inches)	Cut Length (Inches)	Cutting Capacity (Cold-Rolled/Stainless)
28231	Left and Straight	9 1/4	1 3/16	18 ga.CR / 22 ga.SS
28233	Right and Straight	9 1/4	1 3/16	18 ga.CR / 22 ga.SS

28253 2 Piece Offset Aviation Snips Set in Vinyl Pouch

Contents Include:

Product Code	Description	Product Code	Description
28231	Left and Straight Cut	28233	Right and Straight Cut

Features

- Color-coded handles help quickly identify the cutting direction.
- Bi-mold handles provide comfortable grip, reduces hand fatigue.
- Meet ANSI and DIN standards.
- Offset blades keeps user's hands above the work for safety and flow material away from blades for speed.

WILLIAMS®

SPECIALTY AVIATION SNIPS

Bi-Mold Comfort Grip Handles

Product Code	Style	Overall Length (Inches)	Cut Length (Inches)	Cutting Capacity (Cold-Rolled/Stainless)
28211	Bulldog - Notch	9	1	16 ga.CR / 18 ga.SS
28221	Long Cut - Straight	11 3/8	3	20 ga.CR / 26 ga.SS

28255 2 Piece Specialty Aviation Snips Set in Vinyl Pouch

28255	2 Piece Specialty Snips Set. Includes one each Bulldog and Long Cut snips above.

Contents Include:

Product Code	Description	Product Code	Description
28211	Bulldog - Notch	28221	Long Cut - Straight

Features

- Bulldog snips notches and cuts rolled edges, seams, and thick sheet metal up to 16 gauge cold-rolled steel.
- Color-coded handles help quickly identify the cutting direction.
- Bi-mold handles provide comfortable grip, reduces hand fatigue.
- Meet ANSI and DIN standards.

4559

BAHCO

BOLT CUTTERS

Comfort Grip Handles

Product Code	Overall Length	Maximum Cutting Capacity For Rebar (Inch)	Replacement Jaw Kit (Includes Jaws, Bolts, and Steel Plates)
4559-12	12	1/4	4559-12B JC
4559-18	18	5/8	4559-18B JC
4559-24	24	3/8	4559-24B JC
4559-30	30	1/2	4559-30B JC
4559-36	36	5/8	4559-36B JC
4559-42	42	5/8	4559-42B JC

Features
- Comfortable rubber grips combine durability and a secure non-slip grip.
- Lightweight steel tube handles provide ease of control while offering solid durability.
- Unique manufacturing method results in high-precision cutting edges.

1520G

BAHCO

MINI BOLT CUTTER

Bi-Mold Comfort Grip Handles

Product Code	Overall Length (Inches)
1520G	8

Features
- Access tough to reach work.
- Bi-mold comfort grips combine durability and a secure non-slip grip.
- Cuts nails and bolts up to 1/4 diameter.

2744

BAHCO

MULTI-PURPOSE SNIPS

Bi-Mold Comfort Grip Handles

Product Code	Overall Length (Inches)
2744	7½

Features
- Lightweight yet strong multi-purpose snip for cutting light sheet metal, leather, wire, plastic, wood, etc.

782-U

BAHCO

WIRE BRUSH

Product Code	Description
782-U	Wire brush

Features
- General purpose utility wire brush for cleaning off durt, rust, paint etc....

BAHCO

TAPE MEASURE

Stainless Steel Construction Grade Tape Rule

Product Code	Blade Length (width x length)
MTS-5-25-E	1 x 16
MTS-8-25-E	1 x 26

Features

- SAE & Metric markings
- Stainless steel blade and components are rust proof & washable
- Automatic blade lock: the blade locks automatically when pulling, no need to push the button to lock.
- Non-reflective nylon blade coating for better readability
- Magnetic tip for ceiling measuring & magnetic pickup, reverse blade printing to measure taller vertical distances
- Nylon coated blade for durability and resistance
- Impact absorbing rubber bumpers for better grip and comfort
- Integrated belt & button clip

MTS-5-25-E

BAHCO

TAPE MEASURE

Deluxe Construction Grade Tape Rule

Product Code	Blade Length (width x length)
MTB-3-16-E	5/8 x 12
MTB-3-16-M-E **	5/8 x 12
MTB-5-25-E	1 x 16
MTB-5-25-M-E **	1 x 16
MTB-8-25-E	1 x 26

Features

- SAE & Metric markings
- Automatic blade lock: the blade locks automatically when pulling, no need to push the button to lock.
- Non reflective nylon blade coating for better readability
- Nylon coated blade for long lasting and resistance
- Impact absorbing rubber bumpers for better grip and comfort
- Integrated belt & button clip
- ** Magnetic tip for ceiling measuring & magnetic pickup, reverse blade printing to measure taller vertical distances

MTB-5-25-E

BAHCO

TAPE MEASURE

Construction Grade Tape Rule

Product Code	Blade Length (width x length)
MTG-3-16-E	5/8 x 12
MTG-5-19-E	3/4 x 16

Features

- SAE & Metric markings
- Manual locking button to stop the blade retracting in use.
- Ridges around edge for easy grip
- Flat base enables tape to stand up on its own.
- Stainless steel belt clip
- Integrated belt clip

MTG-5-19-E

850002

BAHCO

TAPE MEASURE

Construction Grade Tape Rule

Product Code	Blade Length (Inch x Feet)
850002	1 X 30

Features

- Rubber hook bumper protects hook from damage during blade rewind.
- Tough baked-on Epoxy coated blade protects marking and provides long life readability.
- Yellow blade color with oversized numbers provides easy-to-read visibility in most work locations.
- Positive slide-locking brake securely holds blade in place for measurements.
- Triple rivet adjusting hook allows for more accurate measurements.
- Molded rubber grips on case designed for comfort and easy visibility.
- High impact ABS case construction provides durability and strength in working applications.
- Belt clip included and is attached to the back of the case.

9574-200

BAHCO

BEVEL WITH LOCKING END

Product Code	Description	Length (inches)
9574-200	Bevel with Locking End	8

Features

- Stainless steel blade with aluminum handle.
- Wing nut made out of steel in steel thread to avoid wear.
- Wing nut on bottom of handle
- Sliding bevel adjustable to any angle

BE-8985

BAHCO

SCRATCH AWL

Product Code	Description	Over all length (inches)	Blade Length (inches)
BE-8985	Scratch Awl	8 ½	4

Features

- A Scratch awl comes in handy when a pencil or maker does not show up very well on the material you need to mark.
- This tool is easy to use, and it lasts longer than a pencil or pen.
- Three component ergonomically designed handle provides comfort and maximum grip even with oily hands.Sliding bevel adjustable to any angle

BAHCO

1/4" DRIVE REVERSIBLE REFRIGERATION RATCHET

Quick-Release, Narrow Head Design

Product Code	Description	Length (Inches)
R6950	¼" Drive Reversible Refrigeration Ratchet	6 ¼

R6950

Features
- Easily reversible, 34 teeth, for turning shut-off valves.
- Female squares in ratchet head: 6,5 (1/4") and 8 mm (5/16").
- Female squares in handle: 8,5 9,5 (3/8") and 13 mm.

BAHCO

BASIN WRENCH

SAE, Packed in a Metal Box

Product Code	Description
363-32	Basin Wrench

363-32

Features
- Telescopic basin nut wrench with reversible jaw for nuts on wash basins, bathtubs, sinks or bidets. With 4 adjustment sizes.
- Length 11 inches to 18 inches (Telescopic)
- Capacity 3/8 mm to 1-1/4 mm
- Adjustable pivoted jaw
- 4 length adjustments

BAHCO

19 PIECE REFRIGERATION SET, MM

SAE, Packed in a Metal Box

Product Code	Description
R6725ZK	19 Piece Refrigeration Set, MM

Contents Include:

Product Code	Description	Product Code	Description
R6950	¼" Drive Reversible Refrigeration Ratchet	6966	Universal Joint
6954	Sliding T-Handle	R6967	Adaptor
6962	6" Extension Bar	R6964A	Replacement Drive

1/4" Drive 6 Pt, MM:	1/4" Drive, Male Driver, SAE:	1/4" Drive, Male Drivers, MM:	
Product Code	Product Code	Product Code	
6700SM-7	R6810Z	R6810M-3.4	R6810M-6
6700SM-8		R6810M-4	R6810M-7
6700SM-10		R6810M-4.5	R6810M-8
		R6810M-5	R6810M-9

R6725ZK

Features
- Contains all necessary items for refrigeration repair

BAHCO

19 PIECE REFRIGERATION SET, SAE

SAE, Packed in a Metal Box

Product Code	Description
R6725MK	19 Piece Refrigeration Set, SAE

Contents Include:

Product Code	Description	Product Code	Description
R6950	¼" Drive Reversible Refrigeration Ratchet	6966	Universal Joint
6954	Sliding T-Handle	R6967	Adaptor
6962	6" Extension Bar	R6964A	Replacement Drive

1/4" Drive 6 Pt, SAE:		1/4" Drive, Male Driver, MM:	1/4" Drive, Male Drivers, SAE:	
Product Code		Product Code	Product Code	
6700SZ-1/4	6700SZ-7/16	R6810M-6	R6810Z-3/16	R6810Z-7/32
6700SZ-5/16	6700SZ-1/2		R6810Z-1/4	R6810Z-3/8
6700SZ-3/8	6700SZ-11/32		R6810Z-5/16	R6822Z-15/32 X 11/32

R6725MK

Features
- Contains all necessary items for refrigeration repair

40281

WILLIAMS®

AUTO-RANGING DIGITAL MULTIMETER

Product Code	Description
40281	Digital Multimeter

Features

- Auto-ranging function selects the best range automatically
- Optional manual-range reads low or high signals beyond auto-range limits
- Easy to read 3260 count LCD display
- Analog bar graph reveals rapidly changing signals
- Up to 750AC and 1,000DC volts for a wide range of applications
- Test up to 10Amps AC/DC plus smaller milliAmp and mircroAmp readings
- Measures Ohms up to 32.6M for proper circuit & component resistance
- Test for continuity or integrity of a circuit or component
- Enables testing Diodes for proper flow and values
- Data hold button captures important display values
- Rubber boot protects the meter from drops or rough use
- Auto power-off saves battery life

40280

WILLIAMS®

BORESCOPE

Product Code	Description
40280	Video Inspection scope

Features

- Single on/off button and battery indicator
- Convenient thumb control for LED light intensity
- 2 3/8" color LCD provides a larger viewing image than eyepiece borescopes
- Packaged in protective blow-molded plastic case

WILLIAMS

SET-UP WEDGES

Heavy Duty Machine Shop Tools

Product Code	Length	Width	Thick End
WG-3	3	1	1/4
WG-5	5	1	1/2
WG-6	6	1 1/4	3/4

Made in U.S.A.

Features

- Set-up wedges are used for setting-up work on planers, shapers, milling machines and other similar applications.

WG-5

WILLIAMS

EYEBOLTS

Plain Pattern

Product Code	Shank Diameter (Inches)	Threads per Inch	Capacity of Vertical Load (lbs)	Length of Shank (Inches)	Inner Diameter (Inches)	Head Cross Section Thickness (Inches)	Overall Length (Inches)	Ultimate Strength (lbs)
EB-1T	1/4	20	500	1	3/4	9/32	2 1/4	2500
EB-2T	5/16	18	900	1 1/8	27/32	9/32	2 5/8	4500
EB-3T	3/8	16	1,300	1 1/4	1 1/32	5/16	2 29/32	6500
EB-4T	7/16	14	1,800	1 3/8	1 1/16	3/8	3 1/4	9000
EB-5T	1/2	13	1,400	1 1/2	1 1/8	5/32	3 5/8	12000
EB-6T	9/16	12	3,000	1 5/8	1 1/4	1/2	3 31/32	15000
EB-7T	5/8	11	4,000	1 3/4	1 5/16	9/16	4 3/8	20000
EB-8T	3/4	10	5,000	2	1 17/32	5/8	4 25/32	25000
EB-9T	7/8	9	7,000	2 1/4	1 5/8	13/16	5 9/16	35000
EB-10T	1	8	9,000	2 1/2	1 3/4	29/32	6 1/8	45000
EB-11T	1 1/8	7	12,000	2 3/4	1 15/16	1 1/16	6 7/8	60000
EB-12T	1 1/4	7	15,000	3 1/2	2 5/32	1 5/32	7 1/2	75000
EB-14T	1 1/2	6	21,000	3 3/4	2 7/16	1 13/32	8 13/16	105000
EB-15T	1 3/4	5	28,000	3 3/4	2 25/32	1 21/32	9 7/8	140000
EB-16T	2	4 1/2	38,000	4	3 5/32	1 27/32	11	190000
EB-17T	2 1/2	4	56,000	5	4	2 1/4	13 1/2	280000

ANSI Spec: B18.15 1985

Made in U.S.A.

Features

- Forged from the best quality carbon steel, hardened and tempered to ensure increased strength and toughness and reduce liability or breakage.
- Each lot is tested and inspected to insure conformance to specifications.
- Available with UNC Class 2A thread only.
- Plain pattern eyebolts must never be used to lift an angular load.
- Eyebolt shanks should never be undercut or eyebolt shank diameters reduced.
- To obtain greatest strength from an eye bolt, it must fit reasonably tight in the hole into which it is screwed to prevent unscrewing due to twist of cable. Tightness and seating must be checked after initial load.

EB-9T

WILLIAMS

EYEBOLTS

Shoulder Pattern

Product Code	Shank Diameter (Inches)	Threads per Inch	Length of Shank (Inches)	Inner Diameter (Inches)	Head Cross-Section Thickness (Inches)	Overall Length (Inches)	Shoulder Width (Inches)	Ultimate Strength (lbs)
EB-21T	1/4	20	1	3/4	9/32	2 7/16	9/16	2500
EB-22T	5/16	18	1 1/8	27/32	9/32	2 7/8	19/32	4500
EB-23T	3/8	16	1 1/4	1	5/16	3 11/32	21/32	6500
EB-24T	7/16	14	1 3/8	1 1/16	3/8	3 23/32	27/32	9000
EB-25T	1/2	13	1 1/2	1 5/32	7/16	4 1/32	29/32	12000
EB-26T	9/16	12	1 5/8	1 11/32	7/32	4 13/32	15/16	15000
EB-27T	5/8	11	1 3/4	1 11/32	9/16	4 3/4	1 1/32	20000
EB-28T	3/4	10	2	1 1/2	11/16	5 11/32	1 5/16	25000
EB-29T	7/8	9	2 1/4	1 5/8	13/16	6	1 7/16	35000
EB-30T	1	8	2 1/2	1 13/16	7/8	6 3/4	1 5/8	45000
EB-31T	1 1/8	7	2 3/4	1 15/16	1 1/16	7 1/2	1 3/4	60000
EB-32T	1 1/4	7	3	2 1/8	1 3/16	8 3/8	2 1/32	75000
EB-34T	1 1/2	6	3 1/2	2 19/32	1 1/2	9 3/8	2 3/16	105000
EB-35T	1 3/4	5	3 3/4	2 27/32	1 19/32	10 3/4	2 1/2	140000
EB-36T	2	4 1/2	4	3 5/32	1 7/8	12	2 29/32	190000

ANSI Spec: B18.15 1985

Made in U.S.A.

Features

- Forged from the best quality carbon steel, hardened and tempered to ensure increased strength and toughness and reduce liability or breakage.
- Each lot is tested and inspected to insure conformance to specifications.
- Available with UNC Class 2A thread only.
- Eyebolt shanks should never be undercut or eyebolt shank diameters reduced.
- Shoulder eye bolts must be properly seated (should bear firmly against the mating part) otherwise the working loads must be reduced substantially. A steel washer or spacer may be required for proper seating.
- To obtain greatest strength from an eye bolt, it must fit reasonably tight in the hole into which it is screwed to prevent unscrewing due to twist of cable. Tightness and seating must be checked after initial load.

EB-29T

EYEBOLT ANGULAR LOADING RATED CAPACITY

Material Data

Grade: Carbon Steel
Heat Treat: Quench & Draw

Mechanical Properties

Grain Size: 5 or finer
Tensile: 65,000 PSI Min
Yield: 30,000 PSI Min
Elongation: 30% Min
Reduction of Area: 60% Min

Part Number Plain	Shank Diameter	Threads Per Inch	Capacity of Vertical Load (lbs)	Ultimate Strength (lbs)	Angular Loading Rated Capacity (Pounds) 0 Degree	30 Degree	60 Degree	90 Degree
EB-1T	1/4	20	500	2,500				
EB-2T	5/16	18	900	4,500				
EB-3T	3/8	16	1,300	6,500				
EB-4T	7/16	14	1,800	9,000				
EB-5T	1/2	13	2,400	12,000				
EB-6T	9/16	12	3,000	15,000				
EB-7T	5/8	11	4,000	20,000				
EB-8T	3/4	10	5,000	25,000				
EB-9T	7/8	9	7,000	35,000				
EB-10T	1	8	9,000	45,000				
EB-11T	1 1/8	7	12,000	60,000				
EB-12T	1 1/4	7	15,000	75,000				
EB-14T	1 1/2	6	21,000	105,000				
EB-15T	1 3/4	5	28,000	140,000				
EB-16T	2	4 1/2	38,000	190,000				
EB-17T	2 1/2	4	56,000	280,000				
EB-21T	1/4	20	500	2,500	440	70	NR	NR
EB-22T	5/16	18	900	4,500	720	170	NR	NR
EB-23T	3/8	16	1,300	6,500	1,080	335	185	150
EB-24T	7/16	14	1,800	9,000	1,480	435	275	215
EB-25T	1/2	13	2,400	12,000	1,960	695	460	365
EB-26T	9/16	12	3,000	15,000	3,140	1,220	735	600
EB-27T	5/8	11	4,000	20,000	3,140	1,220	735	600
EB-28T	3/4	10	5,000	25,000	4,600	1,950	1,095	960
EB-29T	7/8	9	7,000	35,000	6,400	2,710	1,750	1,485
EB-30T	1	8	9,000	45,000	8,400	3,595	2,450	2,160
EB-31T	1 1/8	7	12,000	60,000	10,600	4,235	3,380	2,985
EB-32T	1 1/4	7	15,000	75,000	13,400	5,540	3,675	3,285
EB-34T	1 1/2	6	21,000	105,000	19,600	8,410	5,590	5,080
EB-35T	1 3/4	5	28,000	140,000	28,000	12,100	8,250	7,370
EB-36T	2	4 1/2	38,000	190,000	38,000	15,970	10,910	9,740

NR = Not Recommended.

- No greater load should be allowed than that given under rated capacity in each table of dimensional data.
- Safety Factor: Rated capacity is figured with 5:1 safety factor for zero degree straight vertical pull.

WILLIAMS®

FLUTED SCREW EXTRACTORS

Straight, Tapered Flutes

Product Code	Drill Size (Inches)	For Use on Bolt Sizes (Inches)
EX-21A	1/8	1/4 to 5/16
EX-21B	3/16	3/8
EX-22A	7/32	7/16
EX-24A	5/16	1/2 to 9/16
EX-25B	3/8	5/8
EX-25A	15/32	3/4
EX-26A	9/16	7/8
EX-28	21/32	1 to 1 1/8
EX-29	13/16	1 1/4 to 1 3/8

EXS-30 6 Piece Screw Extractor Set
Contents Include:

Product Code	Product Code	Product Code
EX-21A	EX-22A	EX-25B
EX-21B	EX-24A	EX-25A

EXS-9 9 Piece Screw Extractor Set
Contents Include:

Product Code	Product Code	Product Code
EX-21A	EX-24A	EX-26A
EX-21B	EX-25B	EX-28
EX-22A	EX-25A	EX-29

Features
- Designed for quick, easy removal of left or right-handed broken screws, bolts, studs or other threaded forms.
- Drill bit sizes to be used are stamped on each extractor.
- A hole is first drilled in the broken stem and the right size Williams extractor is then inserted.

USA Made in U.S.A.

EX-26A

EXS-30

EXS-9

WILLIAMS®

FEELER GAUGE SET

Heavy Duty Machine Shop Tools

Product Code	Description	Thickness	Number of Blades
GS-1	Master Feeler Gauge Set	.0015 - 1/32	25

Features
- 25 blades 3-5/16" x 1/2" in the following thicknesses: .0015, .002, .003, .004, .005, .006, .007, .008, .009, .010, .011, .012, .013, .014, .015, .016, .018, .020, .022, .024, .025, .028, .030, .032, and .035.
- Both decimal and equivalent metric size etched in each blade.
- Gauges supplied in holder with knurled lock-nut which allows the user to select the required blade size and lock it into position.

Product Code	Description	Thickness	Number of Blades
GS-2	Standard Feeler Gauge Set	.002 - .015	10

Features
- 10 blades 3" x 1/2" in the following thicknesses: .002, .003, .004, .005, .006, .007, .008, .010, .012, .015.
- Both decimal and equivalent metric size etched in each blade.
- Gauges supplied in holder with knurled lock-nut which allows the user to select the required blade size and lock it into position.

Product Code	Description	Thickness	Number of Blades
GS-3	Combination Feeler Gauge Set	.002 - .025	22

Features
- Contains total of 22 blades.
- 10 blades 3" x 1/2" in the following thicknesses: .002, .003, .004, .005, .006, .007, .008, .010, .013, .015.
- 12 blades 1-3/4" x 1/4" in the following thicknesses: .011, .012, .013, .014, .015, .016, .017, .018, .019, .020, .022, .025.
- Overall length 5".
- Both decimal and equivalent metric size etched in each blade.
- Gauges supplied in holder with knurled lock-nut which allows the user to select the required blade size and lock it into position.

Product Code	Description	Thickness	Number of Blades
GS-4	Piston Feeler Gauge Set	.002 - .015	8

Features
- 8 blades 9" x 1/2" in the following thicknesses: .002, .003, .004, .005, .006, .008, .010, .015.
- Both decimal and equivalent metric size etched in each blade.
- Gauges supplied in holder with knurled lock-nut which allows the user to select the required blade size and lock it into position.

USA Made in U.S.A.

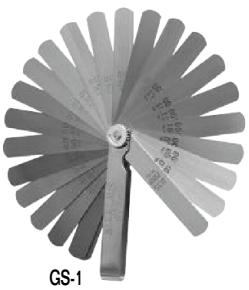
GS-1

GS-2

GS-3

GS-4

2535L

40201

40251

40150

BAHCO

MAGNETIC PICK-UP TOOL WITH LIGHT

Product Code	Description	Extended Length (Inches)
2535L	Magnetic Pick-up Tool with Light	30

Features
- Wide area lighting
- Soft grip handle
- Powerful magnetic tip
- Pick-up weight is 1¼ pounds

WILLIAMS

UTILITY TOOLS AND SETS

Bi-Mold Comfort Grip Handles

Product Code	Description	Contents Include
40201	4 Piece Mini Pick & Hook Set	Straight pick 45° bent tip pick 90° bent tip pick Full semi-circular hook
40251	4 Piece Utility Tool Set	Gasket scraper Scratch awl Cotter pin puller Hose removal tool
40150	Magnetic pick-up tool with telescoping shaft	N/A

Features
- Bi-mold handles provide comfortable grip, reducing hand fatigue.
- Use for scribing, alignment, o-ring removal, and parts cleaning.
- Small size makes them ideal for hard to reach work surfaces.
- Telescopic pick-up tool features powerful magnetic tip.
- Magnetic pick-up tool extended length is 18¼, pick-up weight is 1¼ pounds

WILLIAMS

CREEPERS

Heavy Duty - Low Profile

Product Code	Description
42301	Heavy-Duty Drop-Shoulder Creeper
42302	Mechanic's Seat Creeper
42304	Adjustable-Height Swivel Seat-Creeper

Features - Heavy-Duty Drop-Shoulder Creeper
- Low-profile design rests only 2" from the ground.
- Drop-rail design allows greater shoulder and arm clearance.
- 16 gauge, 3/4" square-stock steel frame.
- 1" padding on bed and 2" padding on headrest.
- Six 2-1/2" diameter hooded casters shield user's clothing from dirt and grease.

Features - Mechanic's Seat Creeper
- Seat is topped with comfortable 1-1/2" thick foam padding.
- 1" square-stock steel frame.
- Four 2-1/2" diameter hooded casters shield user's clothing from dirt and grease.
- Heavy-duty 3-section plastic pan stores tools and small parts.

Features - Adjustable-Height Swivel Seat-Creeper
- Height adjusts from 17" to 22".
- Seat swivels a full 360°.
- Four 2-1/2" diameter hooded casters shield user's clothing from dirt and grease.
- Steel tube frame supports cylinder for ultimate strength.
- Bottom pan serves as storage for tools and small parts.

BAHCO

TOOL POUCHES AND BELTS

Heavy Duty

Product Code	Description	Dimension W x H (Inch)
4750-3PB-1	Three Pouch Belt Set	27 x 10
4750-UP-1	Universal Pouch	12 x 11
4750-EP-1	Electrician Pouch	10 x 12
4750-2PP-1	Two Pocket Pouch	9 x 11
4750-QRLB-1	Quick Release Belt - waist 28" to 54"	2 x 56
4750-HDLB-1	Heavy Duty Leather Belt - waist 28" to 50"	2 x 52
4750-DHO-1	Drill Holster	8 x 13
4750-VMPH-1	Vertical Mobile Phone Holder	3 x 5
4750-HHO-2	Knee Pads	4 x 11
4750-KP-1	Hammer Holder	4 x 7

Features

- Strong industrial stitching.
- Carries all the essentials, rust proof fittings.
- Riveted for extra strength

4750-3PB-1

4750-UP-1

4750-EP-1

4750-2PP-1

4750-QRLB-1

4750-VMPH-1

4750-KP-1

4750-HDLB-1

4750-DHO-1

4750-HHO-2

Insulated Tools

Insulated Tools

Your safety is our highest priority!

Bahco has been designing and manufacturing professional tools for over 120 years. Our core value is product performance, and the tools which perform the best are also usually the safest tools.

Bahco tools are sold worldwide, but they are always backed up with local expertise. With a range of more than 200 insulated tools, Bahco offers one of the widest and most comprehensive assortments of insulated tools on the market.

All Bahco insulated tools are manufactured according to International IEC60900 standards for working with live systems up to 1000VAC & 1500VDC. They follow strict quality controls and are submitted to the most stringent tests.

Bahco insulated tools comply with VDE0820 Standards and 63% of the assortment is certified by the German VDE laboratory. The new Bahco 1000V assortment is designed to get the job done quickly and safely.

Quality guarantee

Bahco tools are engineered to achieve a high level of technical performance. The materials used are high quality and they have been carefully chosen and tested in order to provide safety and durability.

Bahco is one of the few hand-tool manufacturers that make the tools and the insulation in-house. Both the PVC dipped insulated version (most of the tools) and the handle version (pliers and screwdrivers) are manufactured entirely in Bahco factories.

Each tool is tested to 10,000 V for a period of 10 seconds to provide a high level of protection during live work.

Routine tests in accordance with IEC60900 specification

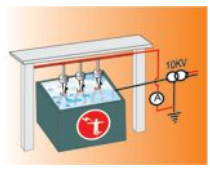

Dielectric test
The tools shall be immersed in water for 24 hours. A voltage of 10 kV shall then be continuously applied for 3 min. The test shall be considered successful if no electrical puncture, spark over or flashover occurs during the test period, and if the limits of leakage current are not exceeded.

Impact test
The tool is cooled at -25° C for two hours. Afterwards, a special hammer applies force on the insulating layer. The test shall be considered successful if the insulating material shows no breaks.

Insulation adhesion test
The tools shall be conditioned at a temperature of 70° C for 168 h. A force of 50 N shall be applied in the direction of the line dividing the insulating material coating from the conductive part for 3 min. The insulation material must during this test stay firmly attached to the basic tool.

Flame test
The test shall be considered as passed if the flame height on the tool does not exceed 120 mm and there is no leakage of insulated material in fusion.

Retaining force test
This test is applied only to tools capable of being assembled. Consists on applying a force of 50 N to try to separate both tools. After a minute, both tools had to stay assembled.

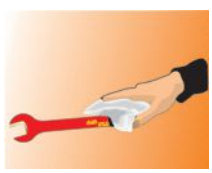

Permanent marking durability
The markings shall be rubbed for 15 s with a rag soaked in water, and then for 15 s with a rag soaked in isopropanol. After this rubbing, the marking shall still be legible

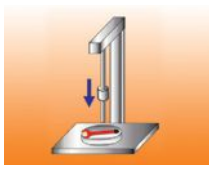

Penetration test
The insulating surface is pressed with a special device. A voltage of 5000 V is then applied to the tool for 3 minutes. The test shall be considered successful if no electrical puncture, spark-over or flashover occurs during the test period.

Visual and dimensional
The tool (in particular the insulation) shall be visually checked and shall be free from external defects. The marking has to be perfectly legible and the dimensions should be inaccordance with the standard.

* 63% of Bahco insulated tools are Certified by the German VDE laboratory

BAHCO

1000V 11 PIECE 1/2" DRIVE SOCKET AND DRIVE TOOL SET

Product Code	Description
7811DMV	1000V 11 Piece 1/2" Drive Socket and Drive Tool Set

Contents Include:

1/2" Drive Tools

Product Code	Description
8150-1/2V	1000V Ratchet
8154-1/2V	1000V T-Handle
8160-1/2V	1000V Extension
813VDE-5.5-125	Screwdriver VDE Slotted

1/2" Drive Sockets

Product Code	Size (mm)
7800DMV-10	10
7800DMV-11	11
7800DMV-13	13
7800DMV-17	17
7800DMV-19	19
7800DMV-20	20
7800DMV-22	22

Features

- For work on electrical installations.
- Includes shock resistant plastic case

1000V

7811DMV

BAHCO

1000V 10 PIECE TOOL SET

Product Code	Description
3045V-1	1000V 10 Piece Tool Set

Contents Include:

1000V Tools

Product Code	Description
2171V-160	Side Cutting Pliers
2678V-180	Combination Pliers
2223V-150	Wire Stripping Pliers
BE-8220S	9" Slotted ergo® Screwdriver, ½ Tip
BE-8040S	8 ¾" Slotted ergo® Screwdriver, 5⁄32 Tip
BE-8050S	8 ¾" Slotted ergo® Screwdriver, 7⁄32 Tip
BE-8610S	8" Phillips ergo® Screwdriver, PH 1
BE-8620S	8 ¾" Phillips ergo® Screwdriver, PH 2
2820VP	Knife with Straight Blade
SC127V	Electrician Scissors

Features

- For work on electrical installations
- A compact resistant case with basic assortment of 1000V tools

1000V

3045V-1

3045V-2

BAHCO

1000V 19 PIECE TOOL SET

Product Code	Description
3045V-2	1000V 19 Piece Tool Set

Contents Include:

1000V Tools

Product Code	Description
2171V-160	Side Cutting Pliers
2678V-180	Combination Pliers
2430V-160	Snip Nose Pliers
2223V-150	Wire Stripping Pliers
BE-8220S	9" Slotted ergo® Screwdriver,1/2 Tip
BE-8040S	8 ¾" Slotted ergo® Screwdriver, 5/32 Tip
BE-8050S	8 ¾" Slotted ergo® Screwdriver, 7/32 Tip
BE-8255S	10 ¾" Slotted ergo® Screwdriver, 1/4 Tip
BE-8610S	8" Phillips ergo® Screwdriver, PH 1
BE-8620S	8 ¾" Phillips ergo® Screwdriver, PH 2
2820VP	Knife with Straight Blade
SC150NGV	Electrician Scissors

1000V Open End Wrenches

Product Code	Size (mm)
6MV-10	10
6MV-11	11
6MV-12	12
6MV-13	13
6MV-14	14
6MV-17	17
6MV-18	18
6MV-19	19

Features

- For work on electrical installations
- A compact resistant case with basic assortment of 1000V tools

1000V

6MV/8T

BAHCO

1000V 8 PIECE OPEN END WRENCH SET, METRIC

Product Code	Description
6MV/8T	1000V 8 Piece Open End Wrench Set, Metric

Contents Include:

1000V Tools

Product Code	Size (mm)
6MV-10	10
6MV-11	11
6MV-12	12
6MV-13	13
6MV-14	14
6MV-17	17
6MV-18	18
6MV-19	19

Features

- For work on electrical installations
- Supplied in a plastic roll pouch

1000V

1000V ERGO® SLOTTED SCREWDRIVERS

Three Component Handle with Black Oxide Tips

Product Code	Overall Length (Inches)	Blade Length (Inches)	Tip Width (Inches)
BE-8010S	7	3	3/32
BE-8220S	9	4	1/8
BE-8040S	8 3/4	4	5/32
BE-8050S	8 3/4	4	7/32
BE-8230S	9 3/4	5	9/64
BE-8255S	10 3/4	6	1/4
BE-8065S	11 5/8	7	5/16

Features

- The three component ergonomically designed handle provides comfort and maximum grip even with oily hands.
- Color coded handles indicates tip type and show tip type symbol on bottom of handle for quick identification.
- Black oxide tips prevent chipping of chrome to reduce possible contamination at work location.

1000V

BE-8255S

1000V ERGO® PHILLIPS® SCREWDRIVERS

Three Component Handle with Black Oxide Tips

Product Code	Overall Length (Inches)	Blade Length (Inches)	Point Size
BE-8600S	6 3/8	2 3/8	0
BE-8610S	8	3 5/32	1
BE-8620S	8 3/4	4	2
BE-8630S	10 3/4	6	3
BE-8640S **	14 1/4	8	4

** Dual grip handle for two-handed operation provides extra torque when necessary

Features

- The three component ergonomically designed handle provides comfort and maximum grip even with oily hands.
- Color coded handles indicates tip type and show tip type symbol on bottom of handle for quick identification.
- Black oxide tips prevent chipping of chrome to reduce possible contamination at work location.

1000V

BE-8620S

BE-8640S

BE-9881S

ergo

BAHCO

5 PIECE ERGO® 1000V SCREWDRIVER SET

Three Component Handle with Black Oxide Tips

Product Code	Description
BE-9881S	5 Piece ergo® Screwdriver Set Phillips® / Slotted

Contents Include:

Product Code	Overall Length (Inches)	Blade Length (Inches)	Tip Width / Point Size
BE-8220S	9	4	1/8
BE-8040S	8 3/4	4	5/32
BE-8050S	8 3/4	4	7/32
BE-8610S	8	3 5/32	#1
BE-8620S	8 3/4	4	#2

Features

- Contains 3 slotted and 2 Phillips® screwdrivers.
- For work on live equipment up to 1000 volts.
- The three component ergonomically designed handle provides comfort and maximum grip even with oily hands.
- Color coded handles indicates tip type and show tip type symbol on bottom of handle for quick identification.
- Chrome blades prevent corrosion and can be easily cleaned.
- Black oxide tips prevent chipping of chrome to reduce possible contamination at work location.

1000V

817V

BAHCO

1000V NUT DRIVERS

Product Code	mm	Length (Inches)
817V-6	6	8 3/4
817V-7	7	8 3/4
817V-8	8	8 3/4
817V-10	10	8 3/4
817V-13	13	8 3/4

Features

- Insulated nutdriver for work on live equipment up to 1000 volts
- Hexagon opening tolerance DIN ISO 691, ISO 691

1000V

BAHCO

1000V HIGH LEVERAGE LINESMAN'S PLIER

Product Code	Length	Jaw Length (Inches)	Maximum Cutting Capacity (Inches)
2653V-9	9 1/2	1 9/16	3/32 Hard Steel

Features

- 3 layer coating insulation with different colors plus a 4th one in black to further protect handle edges. Red: safety. Orange: danger. Yellow: high danger
- Joint placement increases leverage to reduce the cutting force needed.
- Saw toothed serrations provide a solid grip on application material.

1000V

2653V-9

BAHCO

1000V HEAVY DUTY LONG NOSE PLIERS

For protection against inadvertent shock when working on circuits up to 1000V.

Product Code	Length	Jaw Length (Inches)	Maximum Cutting Capacity (Inches)
2533V-7	7 1/2	2 7/16	1/16 Hard Steel
2533V-8	8 1/4	2 3/8	5/64 Hard Steel

Features

- 3 layer coating insulation with different colors plus a 4th one in black to further protect handle edges. Red: safety. Orange: danger. Yellow: high danger
- Saw-toothed shaped, serrated jaws provide maximum gripping surface.
- High performance tool steel construction adds extra strength.

1000V

2533V-7

2203V-8

BAHCO

1000V HEAVY DUTY STRAIGHT HEAD DIAGONAL CUTTING PLIERS

For protection against inadvertent shock when working on circuits up to 1000V.

Product Code	Length	Jaw Length (Inches)	Maximum Cutting Capacity (Inches)
2203V-5	5 1/4	9/16	1/16 Piano Wire
2203V-8	8 3/16	13/16	3/32 Piano Wire

Features

- 3 layer coating insulation with different colors plus a 4th one in black to further protect handle edges. Red: safety. Orange: danger. Yellow: high danger
- High frequency hardened cutting edges hold their precision sharpened cutting surfaces.

1000V

2213V-8

BAHCO

1000V HEAVY DUTY ANGLED HEAD DIAGONAL CUTTING PLIERS

For protection against inadvertent shock when working on circuits up to 1000V.

Product Code	Length	Jaw Length (Inches)	Maximum Cutting Capacity (Inches)
2213V-8	8 1/16	13/16	3/32 Piano Wire

Features

- 3 layer coating insulation with different colors plus a 4th one in black to further protect handle edges. Red: safety. Orange: danger. Yellow: high danger
- High leverage joint placement to reduce the cutting force. Unique screw joint design ensures a smooth joint action.
- The 14 degree angled head enables better accessibility in working situations and leaves free space for your hand.

1000V

BAHCO

1000V COMBINATION PLIERS

For protection against inadvertent shock when working on circuits up to 1000V.

Product Code	Length (inches)
2678V-180	7

Features

- 3 layer coating insulation with different colors plus a 4th one in black to further protect handle edges. Red: safety. Orange: danger. Yellow: high danger
- Cuts from 1.0 mm soft wire to 1.6 mm hard wire
- Chrome plated finish

ISO: 5746 DIN: 5746

1000V

2678V-180

BAHCO

1000V WIRE STRIPPING PLIERS

For protection against inadvertent shock when working on circuits up to 1000V.

Product Code	Length (inches)
2223V-160	6 ¼

Features

- 3 layer coating insulation with different colors plus a 4th one in black to further protect handle edges. Red: safety. Orange: danger. Yellow: high danger
- Maximum cable diameter 5 mm; Maximum cable section 10 mm 2
- Chrome plated finish

1000V

2223V-160

BAHCO

1000V ROUND NOSE PLIERS

For protection against inadvertent shock when working on circuits up to 1000V.

Product Code	Length (inches)
2521V-160	6 ¼

Features

- 3 layer coating insulation with different colors plus a 4th one in black to further protect handle edges. Red: safety. Orange: danger. Yellow: high danger
- Suited for wire-bending work
- Chrome plated finish

ISO: 5745 DIN: 5745

1000V

2521V-160

2430V-160

1000V SNIPE NOSE PLIERS

For protection against inadvertent shock when working on circuits up to 1000V.

Product Code	Length (inches)	Jaw Length (inches)
2430V-160	6 1/4	1 7/8
2430V-200	8	2 7/8

Features

- 3 layer coating insulation with different colors plus a 4th one in black to further protect handle edges. Red: safety. Orange: danger. Yellow: high danger
- Cutting capacity from 1.0 mm soft wire to 1.6 mm hard wire
- Chrome plated finish

ISO: 5745 DIN: 5745

1000V

2427V-200

1000V SNIPE NOSE PLIERS BENT TIP 60°

For protection against inadvertent shock when working on circuits up to 1000V.

Product Code	Length (inches)	Jaw Length (inches)
2427V-200	8	2 3/4

Features

- 3 layer coating insulation with different colors plus a 4th one in black to further protect handle edges. Red: safety. Orange: danger. Yellow: high danger
- Tips angled at 60°°
- Cutting capacity from 1.0 mm soft wire to 1.6 mm hard wire
- Chrome plated finish

ISO: 5745 DIN: 5745

1000V

2421V-160

1000V FLAT NOSE PLIERS

For protection against inadvertent shock when working on circuits up to 1000V.

Product Code	Length (inches)	Jaw Length (inches)
2421V-160	6 1/4	1 7/8

Features

- 3 layer coating insulation with different colors plus a 4th one in black to further protect handle edges. Red: safety. Orange: danger. Yellow: high danger
- Good grip and improved accessibility in confined spaces
- Chrome plated finish

ISO: 5745 DIN: 5745

1000V

1000V END CUTTING PLIERS

For protection against inadvertent shock when working on circuits up to 1000V.

Product Code	Length (inches)	Jaw Length (inches)
527V-160	6 ¼	¼
527V-200	8	¼

Features

- 3 layer coating insulation with different colors plus a 4th one in black to further protect handle edges. Red: safety. Orange: danger. Yellow: high danger
- Cuts from 1.0 mm soft wire to 1.6 mm hard wire
- Chrome plated finish

ISO: 5748 DIN: 5748

1000V

527V-160

1000V SIDE CUTTING PLIERS

For protection against inadvertent shock when working on circuits up to 1000V.

Product Code	Length (inches)	Jaw Length (inches)
2171V-160	6 ¼	¾
2171V-180	7	¾

Features

- 3 layer coating insulation with different colors plus a 4th one in black to further protect handle edges. Red: safety. Orange: danger. Yellow: high danger
- Cuts from 0.5 mm soft wire to 1.6 mm hard wire
- Chrome plated finish

ISO: 5749, DIN: 5749

1000V

2171V-180

1000V HEAVY DUTY SIDE CUTTING PLIERS

For protection against inadvertent shock when working on circuits up to 1000V.

Product Code	Length (inches)	Jaw Length (inches)
2191V-200	8	¾

Features

- 3 layer coating insulation with different colors plus a 4th one in black to further protect handle edges. Red: safety. Orange: danger. Yellow: high danger
- Cuts piano wire
- Chrome plated finish

ISO: 5749, DIN: 5749

1000V

2191V-200

2628S

1000V SIDE CUTTING COMBINATION PLIERS

With Insulated Grips

Product Code	Overall Length (Inches)	Jaw Length (Inches)	Maximum Cutting Capacity (Inches)
2628S-180	7	1 7/16	5/64 Hard Steel
2628S-200	8	1 1/2	7/64 Hard Steel

Features

- Extra thick grip handles with thumb stops, provides protection up to 1000 volts.
- High-leverage joint placement to reduce the cutting force. Joint design ensures a smooth joint action.
- Heavy-duty design - high performance tool steel construction adds extra strength.

1000V

2101S

1000V DIAGONAL CUTTING PLIERS

With Insulated Grips

Product Code	Overall Length (Inches)	Jaw Length (Inches)	Maximum Cutting Capacity (Inches)
2101S-140	5 1/2	5/8	1/16 Piano Wire
2101S-160	6 1/4	3/4	1/16 Piano Wire
2101S-180	7	13/16	5/64 Piano Wire
2101S-200	8	7/8	3/32 Piano Wire

Features

- Extra thick grip handles with thumb stops, provides protection up to 1000 volts.
- Edges near the joint are shaped for cutting hard materials such as thick single wires.
- Towards the tip they are adapted for soft materials and for stripping wires of thinner dimensions.
- Jaws are made from specially hardened steel so they stay sharp longer.

1000V

2430S

2427S

1000V NOSE PLIERS

With Insulated Grips

Product Code	Style	Overall Length (Inches)	Maximum Cutting Capacity (Inches)
2430S-200	straight	8	1/16 Hard Steel
2427S-200	curved	8	5/64 Hard Steel

Features

- High performance tool steel construction adds extra strength.
- Extra thick grip handles with thumb stops, provides protection up to 1000 volts.

1000V

BAHCO

1000V CABLE CUTTER

With Insulated Grips

Product Code	Overall Length (Inches)	Cable Cutting Capacity (Inches) / Description	Replacement Blade Kit
2520S	23 5/8	1 3/16 Aluminum/Copper without Messenger Wire	2520-SH

Features

- For cuts on ferrous material, only use cutting notch that is provided below top cutting blades in jaws.
- Extra thick grip handles on insulated cutter provides protection up to 1000 volts.

1000V

2520S

BAHCO

1000V RATCHET ACTION CABLE CUTTER

For protection against inadvertent shock when working on circuits up to 1000V.

Product Code	Length (inches)	Cutting Capacity (Inches)
2806-35V	9	1 ½
2806-52V	13	2

Features

- 3 layer coating insulation with different colors plus a 4th one in black to further protect handle edges. Red: safety. Orange: danger. Yellow: high danger
- One hand operation, easy release of the movable jaw
- For cutting copper and aluminum cables
- Not suitable for hard copper, steel cables, or internal steel wire cables
- Clean and smooth cut without distortion

1000V

2806-35V

BAHCO

1000V BOLT CUTTER

For protection against inadvertent shock when working on circuits up to 1000V.

		Wire types Ø mm w		
Product Code	Length (inches)	80kg/mm²	120kg/mm²	160kg/mm²
2820VBC	25	9	8	7

Features

- 3 layer coating insulation with different colors plus a 4th one in black to further protect handle edges. Red: safety. Orange: danger. Yellow: high danger
- Forged head; Induction hardened cutting edges
- Long arms with lever-action head, allows cutting of hard wires with very little effort.

1000V

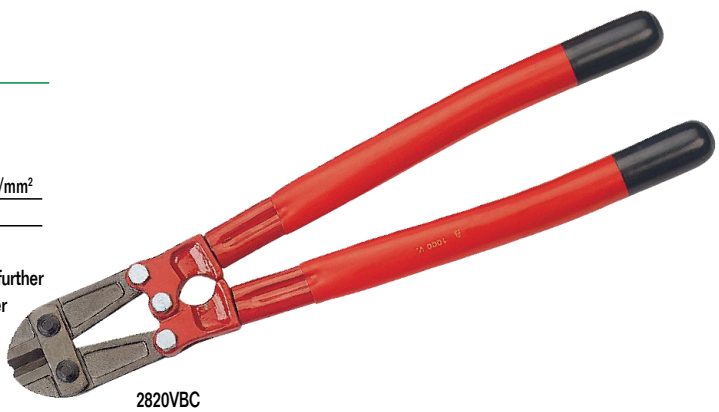
2820VBC

2ZV-5/8

BAHCO

1000V OFFSET BOX END WRENCH - SAE

For protection against inadvertent shock when working on circuits up to 1000V.

Product Code	Size (Inches)	Overall Length (Inches)	Open End Width (Inches)	Open End Thickness (Inches)
2ZV-5/16	5/16	6	1/2	1/4
2ZV-3/8	3/8	6 1/4	5/8	1/4
2ZV-7/16	7/16	7	3/4	3/8
2ZV-1/2	1/2	7 1/2	3/4	3/8
2ZV-9/16	9/16	7 3/4	1	3/8
2ZV-5/8	5/8	7 7/8	1	3/8
2ZV-3/4	11/16	8	1	3/8
2ZV-11/16	3/4	8 3/4	1 1/8	3/8
2ZV-13/16	13/16	9 1/4	1 1/4	1/2
2ZV-7/8	7/8	9 2/3	1 1/4	1/2
2ZV-15/16	15/16	10 1/2	1 3/8	1/2
2ZV-1	1	10 3/4	1 1/2	1/2
2ZV-1.1/16	1 1/16	11	1 1/2	1/2

Features

- 2 layer coating insulation with different colors plus a 3rd one in black to further protect handle edges on spanners from 6 mm to16 mm. Red: safety. Yellow: danger
- 3 layer coating insulation with different colors plus a 4th one in black to further protect handle edges on spanners from 17 mmto 32 mm. Red: safety. Orange: danger. Yellow: high danger
- Material: Chrome-Vanadium steel

Opening tolerance according to ISO 691

1000V

2MV16

BAHCO

1000V OFFSET BOX END WRENCH - METRIC

For protection against inadvertent shock when working on circuits up to 1000V.

Product Code	Size (mm)	Overall Length (Inches)	Box End Diameter (Inches)	Box End Thickness (Inches)
2MV6	6	5 1/2	3/8	1/4
2MV7	7	5 3/4	1/2	1/4
2MV8	8	6	1/2	1/4
2MV9	9	6	5/8	1/4
2MV10	10	6 1/4	5/8	1/4
2MV11	11	6 3/4	3/4	1/4
2MV12	12	7	3/4	3/8
2MV13	13	7	3/4	3/8
2MV14	14	7 1/2	3/4	3/8
2MV15	15	7 3/4	1	3/8
2MV16	16	7 7/8	1	3/8
2MV17	17	8	1	3/8
2MV18	18	8 1/2	1	3/8
2MV19	19	8 3/4	1 1/8	3/8
2MV21	21	9 1/4	1 1/4	1/2
2MV22	22	9 2/3	1 1/4	1/2
2MV23	23	10	1 3/8	1/2
2MV24	24	10 1/2	1 3/8	1/2

Features

- 2 layer coating insulation with different colors plus a 3rd one in black to further protect handle edges on spanners from 6 mm to 16 mm. Red: safety. Yellow: danger
- 3 layer coating insulation with different colors plus a 4th one in black to further protect handle edges on spanners from 17 mm to 32 mm. Red: safety. Orange: danger. Yellow: high danger
- Material: Chrome-Vanadium steel

Opening tolerance according to ISO 691

1000V

2820V13

BAHCO

1000V CROSS WRENCH

For protection against inadvertent shock when working on circuits up to 1000V.

Product Code	Length (mm)	Opening (mm)
2820V13	210	7x9x11x13
2820V17	210	8x10x13x17

Features

- 2 layer coating insulation with different colors Red: safety. Yellow: danger
- Material: Chrome-Vanadium steel
- 6 point openings with standard profile

Opening tolerance according to ISO 691

1000V

BAHCO

1000V OPEN END WRENCH - SAE

For protection against inadvertent shock when working on circuits up to 1000V

Product Code	Size (Inches)	Overall Length (Inches)	Open End Width (Inches)	Open End Thickness (Inches)	Layers Coating
6ZV-5/16	5/16	3 5/8	11/16	3/16	2
6ZV-3/8	3/8	4 1/4	15/16	3/16	2
6ZV-7/16	7/16	4 9/16	1	3/16	2
6ZV-1/2	1/2	5 1/2	1 1/4	1/4	2
6ZV-9/16	9/16	6	1 1/4	1/4	2
6ZV-5/8	5/8	6 3/16	1 1/4	1/4	2
6ZV-11/16	11/16	6 3/8	1 7/16	1/4	3
6ZV-3/4	3/4	7	1 11/16	5/16	3
6ZV-13/16	13/16	7 1/4	1 13/16	5/16	3
6ZV-7/8	7/8	7 5/8	1 7/8	5/16	3
6ZV-15/16	15/16	8 1/4	2	5/16	3
6ZV-1	1	8 3/8	2 1/8	5/16	3
6ZV-1.1/16	1 1/16	8 7/8	2 1/4	3/8	3
6ZV-1.1/8	1 1/8	9 1/4	2 3/8	0.38	3
6ZV-1.3/16	1 3/16	9 7/16	2 1/2	3/8	3
6ZV-1.1/4	1 1/4	9 13/16	2 11/16	3/8	3

6ZV-1

Features

- 2 layer coating insulation with different colors plus a 3rd one in black to further protect handle edges on spanners from 5/16" to 5/8". Red: safety. Yellow: danger
- 3 layer coating insulation with different colors plus a 4th one in black to further protect handle edges on spanners from 11/16" to 1 1/4". Red: safety. Orange: danger. Yellow: high danger
- Material: Chrome-Vanadium steel

Opening tolerance according to ISO 691

1000V

BAHCO

1000V OPEN END WRENCH - METRIC

For protection against inadvertent shock when working on circuits up to 1000V

Product Code	Size (mm)	Overall Length (Inches)	Open End Width (Inches)	Open End Thickness (Inches)	Layers Coating
6MV6	6	3 5/8	9/16	1/8	2
6MV7	7	3 5/8	11/16	1/8	2
6MV8	8	3 5/8	11/16	3/16	2
6MV9	9	3 7/8	13/16	3/16	2
6MV10	10	4 1/4	15/16	3/16	2
6MV11	11	4 9/16	1	3/16	2
6MV12	12	5	1 1/8	3/16	2
6MV13	13	5 5/16	1 1/4	3/16	2
6MV14	14	5 1/2	1 1/4	1/4	2
6MV15	15	6	1 1/4	1/4	2
6MV16	16	6 3/16	1 1/4	1/4	2
6MV17	17	6 3/8	1 7/16	1/4	3
6MV18	18	6 2/3	1 9/16	1/4	3
6MV19	19	6 7/8	1 5/8	1/4	3
6MV20	20	7	1 11/16	5/16	3
6MV21	21	7 1/4	1 13/16	5/16	3
6MV22	22	7 5/8	1 7/8	5/16	3
6MV23	23	8	1 7/8	5/16	3
6MV24	24	8 1/4	2	5/16	3
6MV27	27	8 7/8	2 5/16	3/8	3
6MV30	30	9 7/16	2 1/2	3/8	3
6MV32	32	9 13/16	2 11/16	3/8	3

6MV-27

Features

- 2 layer coating insulation with different colors plus a 3rd one in black to further protect handle edges on spanners from 6 mm to 16 mm. Red: safety. Yellow: danger
- 3 layer coating insulation with different colors plus a 4th one in black to further protect handle edges on spanners from 17 mm to 32 mm. Red: safety. Orange: danger. Yellow: high danger
- Material: Chrome-Vanadium steel

Opening tolerance according to ISO 691

1000V

8071V

BAHCO

1000V ADJUSTABLE WRENCHES

For protection against inadvertent shock when working on circuits up to 1000V.

Product Code	Length (inches)	Max Jaw Opening	Head Thickness
8070V	6	3/4	7/16
8071V	8	1 1/16	1/2
8072V	10	1 3/16	5/8
8073V	12	1 5/16	3/4
8074V	15	1 3/4	15/16

Features

- 3 layer coating insulation with different colors plus a 4th one in black to further protect handle edges. Red: safety. Orange: Caution. Yellow: danger
- Material: Chrome-Vanadium steel
- The moveable jaw slides easily by smoothly operating the thumb screw

Complies with ISO and ANSI torque requirements.
Head dimensions comply with ISO 6787 standards

1000V

8071VLT

BAHCO

1000V ADJUSTABLE WRENCHES FULLY INSULATED

For protection against inadvertent shock when working on circuits up to 1000V.

Product Code	Length (inches)	Max Jaw Opening	Head Thickness
8071VLT	8	1 1/4	3/4
8072VLT	10	1 3/8	1
8073VLT	12	1 1/2	1 1/4

Features

- 3 layer coating insulation on the complete wrench with different colors plus a 4th one in black to further protect handle edges. Red: safety Orange: Caution. Yellow: danger
- Chrome-Vanadium steel
- The moveable jaw slides easily by smoothly operating the side screw

Exceed ISO and ANSI torque requirements

1000V

BAHCO

1000V HEX KEY

For protection against inadvertent shock when working on circuits up to 1000V

Product Code	Size (MM)	Overall Length (Inches)	Non-Insulated Tip Length (Inches)	Key Length (Inches)
1999MV-3	3	4 3/4	5/16	3
1999MV-4	4	4 3/4	5/16	3
1999MV-5	5	4 3/4	5/16	3
1999MV-6	6	4 3/4	3/8	3 3/8
1999MV-7	7	4 3/4	3/8	3 5/8
1999MV-8	8	4 3/4	3/8	4
1999MV-9	9	4 3/4	1/2	4
1999MV-10	10	4 3/4	1/2	4 1/2
1999MV-12	12	4 3/4	1/2	5

1999MV-3

Features

- 3 layer coating insulation with different colors plus a 4th one in black to further protect handle edges. Red: safety. Orange: danger. Yellow: high danger
- Material: Chrome-Vanadium steel

Hex dimensions and torque requirements comply with those given in ISO standards

1000V

BAHCO

1000V T-HANDLE SOCKET WRENCH

For protection against inadvertent shock when working on circuits up to 1000V

Product Code	Size (MM)	Overall Length (inches)	Broach Depth (Inches)	Bolt Clearance (Inches)	Working End Diameter (Inches)	Handle Length (Inches)
28MV8	8	7 3/4	5/16	1 1/4	5/8	5
28MV9	9	7 3/4	5/16	1 1/4	11/16	5
28MV10	10	7 3/4	5/16	1 1/4	3/4	5
28MV11	11	7 3/4	3/8	1 1/2	13/16	5
28MV12	12	7 3/4	3/8	1 3/4	7/8	5 1/2
28MV13	13	7 3/4	1/2	1 3/4	7/8	5 1/2
28MV14	14	7 3/4	1/2	1 3/4	1	5 1/2
28MV15	15	7 3/4	1/2	1 3/4	1	5 1/2
28MV16	16	7 3/4	1/2	2	1 1/8	5 1/2
28MV17	17	7 3/4	1/2	2	1 1/8	5 1/2
28MV18	18	7 3/4	1/2	2 1/4	1 1/8	5 1/2
28MV19	19	7 3/4	11/16	2 1/4	1 1/4	5 1/2
28MV20	20	7 3/4	25/32	2 1/2	1 1/4	5 1/2
28MV21	21	7 3/4	25/32	2 1/2	1 1/4	5 1/2
28MV22	22	7 3/4	25/32	2 1/2	1 3/8	5 1/2

Features

- 3 layer coating insulation with different colors plus a 4th one in black to further protect handle edges. Red: safety. Orange: danger. Yellow: high danger
- Material: Chrome-Vanadium steel
- 6 point Dynamic-Drive Profile

Opening tolerance according to ISO 691

1000V

1999MV-3

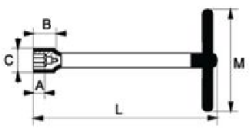

6520800

1000V 3/8" RATCHET

For protection against inadvertent shock when working on circuits up to 1000V.

Product Code	Overall Length (Inches)
6520800	8 ¼

Features

- 3 layer coating insulation with different colors plus a 4th one in black to further protect handle edges. Red: safety. Orange: danger. Yellow: high danger
- Material: Chrome-Vanadium steel

1000V

6520100

1000V 3/8" DRIVE SOCKET

For protection against inadvertent shock when working on circuits up to 1000V.

Product Code	Size (mm)	Overall Length (Inches)	Drive End Diamter (Inches)	Working End Diameter (Inches)	Nose Length (Inches)
6520100	10	1 ½	⅞	¾	¼
6520120	12	1 ½	⅞	¾	¼
6520140	14	1 ½	⅞	1	⅜
6520170	17	1 ½	⅞	1	⅜

Features

- 2 layer coating insulation with different colors. Red: safety. Yellow: danger
- Material: Chrome-Vanadium steel
- 12 point Dynamic-Drive Profile

Both square and 12 point openings according to the tolerance and torque requirements given in ISO standards

1000V

BAHCO

1000V 1/2" RATCHET

For protection against inadvertent shock when working on circuits up to 1000V.

Product Code	Length (inches)	A	B	C
8150-1/2V	10 ½	3	2	½

Features

- 3 layer coating insulation with different colors plus a 4th one in black to further protect handle edges. Red: safety. Orange: danger. Yellow: high danger
- Material: Chrome-Vanadium steel
- One of the buttons is a lever to change the ratcheting direction; the other is a push button to lock or release the socket to the male square drive
- 28 teeth ratchet to operate at a 13° angle

Static and endurance tests with 50000 cycles. Complies with the ISO standards.

1000V

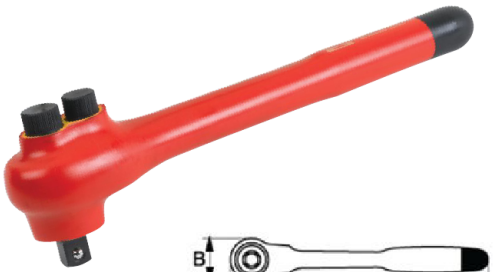
8150-1/2V

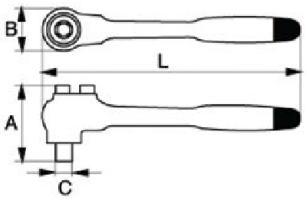

BAHCO

1000V 1/2" T-HANDLE

For protection against inadvertent shock when working on circuits up to 1000V.

Product Code	Length (inches)	A
8154-1/2V	8	7 ½

Features

- 2 layer coating insulation with different colors plus a 3rd one in black to further protect handle edges. Red: safety. Yellow: danger
- Material: Chrome-Vanadium steel
- The male square drive has a slotted screw to move the ball outward or inward and block or unblock the socket to it

The male square tolerances and torque requirements comply with the respective ISO standard.

1000V

8154-1/2V

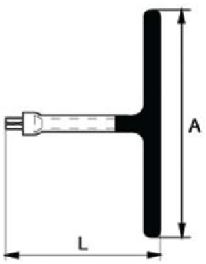

BAHCO

1000V 1/2" EXTENSION

For protection against inadvertent shock when working on circuits up to 1000V.

Product Code	Length (inches)
8160-1/2V	5
8162-1/2V	10

Features

- 2 layer coating insulation with different colors. Red: safety. Yellow: danger
- Material: Chrome-Vanadium steel
- The male square drive is having a slotted screw to move the ball outward or inward and block or unblock the socket to it

The male square tolerances and torque requirements comply with the respective ISO standard.

1000V

8160-1/2V

8162-1/2V

7800DZV

1000V 1/2" DRIVE SOCKETS - SAE

For protection against inadvertent shock when working on circuits up to 1000V.

Product Code	Size (Inches)	Overall Length (Inches)	Drive End Diamger (Inches)	Working End Diameter (Inches)	Nose Length (Inches)
7800DZV-3/8	3/8	2	7/8	3/4	1/4
7800DZV-7/16	7/16	2	7/8	3/4	1/4
7800DZV-1/2	1/2	2	7/8	3/4	1/4
7800DZV-9/16	9/16	2	7/8	1	3/8
7800DZV-5/8	5/8	2	7/8	1	3/8
7800DZV-11/16	11/16	2	7/8	1 1/8	3/8
7800DZV-3/4	3/4	2	7/8	1 3/16	1/2
7800DZV-13/16	13/16	2	7/8	1 1/3	1/2
7800DZV-7/8	7/8	2	7/8	1 1/3	9/16
7800DZV-15/16	15/16	2	7/8	1 1/2	5/8
7800DZV-1	1	2	7/8	1 1/2	5/8
7800DZV-1.1/16	1 1/16	2 1/8	7/8	1 5/8	3/4
7800DZV-1.1/8	1 1/8	2 1/8	7/8	1 5/8	3/4
7800DZV-1.3/16	1 3/16	2 1/8	7/8	1 3/4	3/4
7800DZV-1.1/4	1 1/4	2 1/2	7/8	1 7/8	7/8

Features

- 2 layer coating insulation with different colors
- Material: Chrome-Vanadium steel
- 12 point Dynamic Drive Profile

Both square and 12 point openings according to the tolerance and torque requirements given in ISO standards.

1000V

7800DMV

1000V 1/2" DRIVE SOCKETS - METRIC

For protection against inadvertent shock when working on circuits up to 1000V.

Product Code	Size (Inches)	Overall Length (Inches)	Drive End Diamger (Inches)	Working End Diameter (Inches)	Nose Length (Inches)
7800DMV-8	8	2	7/8	2/3	1/4
7800DMV-10	10	2	7/8	3/4	1/4
7800DMV-11	11	2	7/8	3/4	1/4
7800DMV-12	12	2	7/8	3/4	1/4
7800DMV-13	13	2	7/8	1	1/4
7800DMV-14	14	2	7/8	1	3/8
7800DMV-15	15	2	7/8	1	3/8
7800DMV-16	16	2	7/8	1	3/8
7800DMV-17	17	2	7/8	1 1/8	3/8
7800DMV-18	18	2	7/8	1 1/8	1/2
7800DMV-19	19	2	7/8	1 3/16	1/2
7800DMV-20	20	2	7/8	1 1/4	1/2
7800DMV-21	21	2	7/8	1 1/3	1/2
7800DMV-22	22	2	7/8	1 1/3	9/16
7800DMV-24	24	2	7/8	1 1/2	5/8
7800DMV-27	27	2 1/8	7/8	1 5/8	3/4
7800DMV-30	30	2 1/8	7/8	1 3/4	3/4
7800DMV-32	32	2 1/2	7/8	1 7/8	7/8

Features

- 2 layer coating insulation with different colors
- Material: Chrome-Vanadium steel
- 12 point Dynamic Drive Profile

Both square and 12 point openings according to the tolerance and torque requirements given in ISO standards.

1000V

BAHCO

1000V HACKSAW FRAMES - DIPPED INSULATION

For protection against inadvertent shock when working on circuits up to 1000V.

Product Code	A (inches)	B (inches)	L (inches)
2820HSV1	12	3	18

Features

- Insulated hacksaw with 3906-300-18 Sandflex® bi-metal blade
- 3 layer coating insulation with different colors plus a 4th one in black to further protect handle edges. Red: safety. Orange: danger. Yellow: high danger
- Supplied with the reliable and shatterproof Sandflex® bi-metal blade 18TPI with excellent cutting performance and wear resistance
- Blade length: 12 inches.

1000V

2820HSV1

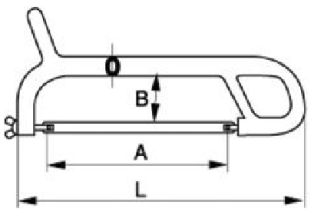

BAHCO

1000V HACKSAW FRAMES WITH SCREEN HANDGUARD - DIPPED INSULATION

For protection against inadvertent shock when working on circuits up to 1000V.

Product Code	A (inches)	B (inches)	L (inches)
2820HSV2	12	3	18

Features

- Insulated hacksaw with 3906-300-18 Sandflex® bi-metal blade
- 3 layer coating insulation with different colors plus a 4th one in black to further protect handle edges. Red: safety. Orange: danger. Yellow: high danger
- Handguard for ultimate protection
- Supplied with the reliable and shatterproof Sandflex® bi-metal blade 18TPI with excellent cutting performance and wear resistance
- Blade length: 12 inches.

1000V

2820HSV2

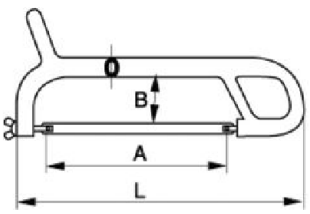

SC127V

SC150NGV

2820VP

2820VPC

2820VHELP

2820VTEE

BAHCO

ELECTRICIAN SCISSORS

For protection against inadvertent shock when working on circuits up to 1000V.

Product Code	Length (inches)
SC127V	5

Features
- Single layer coating (only red coating)
- Small groove in the blade for stripping cables
- 2" cutting length
- Guard to avoid fingers touching the metallic part by mistake

Product Code	Length (inches)
SC150NGV	6

Features
- 2 layer coating: Red: safety. Yellow: danger
- Finger stops in both legs to avoid fingers touching the metallic part by mistake
- The longer handle allows to apply less force to cut a certain wire
- 1-1/2" cutting length

1000V

BAHCO

1000V ELECTRICIAN KNIVES

For protection against inadvertent shock when working on circuits up to 1000V.

Product Code	Description
2820VP	Knife with Straight Blade
2820VPC	Knife with Curved Blade

Features
- 3 layer coating insulation with different colors plus a 4th one in black to further protect handle edges. Red: safety. Orange: danger. Yellow: high danger
- Available in straight and curved blade versions

Product Code	Description
2820VHELP	Knife with Guide

Features
- Insulated 1000 V knife with guide.
- Single layer, injection molded, with protection cap
- Special blade with cable guard show for cable dismantling
- Stainless steel blade; handle shock resistant plastic

1000V

BAHCO

1000 V TWEEZERS

For protection against inadvertent shock when working on circuits up to 1000V.

Product Code
2820VTEE

Features
- Double layer coating - red layer indicates safety, yellow layer indicates danger, plus a 3rd one in black to further protect handle edges.

1000V

BAHCO

1000V GLOVES

For protection against inadvertent shock when working on circuits up to 1000V.

Product Code	Power Supply Volts	Size	Material Thickness (mm)
2820VG05	500	10	.5
2820VG10	1000	10	1

Features

- 2820VG05 for use up to 500 V AC and 750 V DC
- 2820VG10 for use up to 1000 V AC and 1500 V DC
- Made of special natural latex for anatomical fit, good flexibility and dexterity
- Offers protection against electric arcs according to CENELEC ENV 50354 class 2 and IEC 61482-1
- Cold resistance -40° C; Hot resistance 90° C

1000V

2820VG05

BAHCO

GLOVE LINERS

Product Code	Size
2820VGCOT	One Size

Features

- Light, flexible and comfortable under glove
- The high-quality cotton liner and the good fit offer a very good wearing comfort
- Under glove: under all glove types for the absorption of sweat and for the increase of wearing comfort

THIS ITEM IS NOT INSULATED AND HAS TO BE USED WITH INSULATED GLOVES

2820VGCOT

BAHCO

INSULATED CARPET

Product Code
2820VM

Features

- Valid for use up to 5000 V AC
- To stand on it and avoid earth connection when operating live systems. Complies with EN10204-3.1

1000V

2820VM

Appendix

Conversion Chart

Showing Millimeter Sizes, Fractional and Decimal Inch Sizes, and Drill Number Sizes

Note: To convert from inches to millimeters, multiply by 25.4; to convert from millimeters to inches, multiply by 0.03937.

M	DE	F	DN	M	DE	F	DN	M	DE	F	DN	M	DE	F	DN	M	DE	F
0.10	0.0039	—	—	1.75	0.0689	—	—	—	0.1570	—	22	6.80	0.2677	—	—	10.72	0.4219	27/64
0.15	0.0059	—	—	—	0.7000	—	50	4.0	0.1575	—	—	6.90	0.2716	—	—	11.00	0.4330	—
0.20	0.0079	—	—	1.80	0.0709	—	—	—	0.1590	—	21	—	0.2720	—	I	11.11	0.4375	7/16
0.25	0.0098	—	—	1.85	0.0728	—	—	—	0.1610	—	20	7.00	0.2756	—	—	11.50	0.4528	—
0.30	0.0118	—	—	—	0.0730	—	49	4.1	0.1614	—	—	—	0.2770	—	J	11.51	0.4531	29/64
—	0.0135	—	80	1.90	0.0748	—	—	4.2	0.1654	—	—	7.10	0.2795	—	—	11.91	0.4687	15/32
0.35	0.0138	—	—	—	0.0760	—	48	—	0.1660	—	19	—	0.2811	—	K	12.00	0.4724	—
—	0.0145	—	79	1.95	0.0767	—	—	4.25	0.1673	—	—	7.14	0.2812	9/32	—	12.30	0.4843	31/64
0.39	0.0156	1/64	—	1.98	0.0781	5/64	—	4.3	0.1693	—	—	7.20	0.2835	—	—	12.50	0.4921	—
0.40	0.0157	—	—	—	0.0785	—	47	—	0.1695	—	18	7.25	0.2854	—	—	12.70	0.5000	1/2
—	0.0160	—	78	2.00	0.0787	—	—	4.37	0.1719	11/64	—	7.30	0.2874	—	—	13.00	0.5118	—
0.45	0.0177	—	—	2.05	0.0807	—	—	—	0.1730	—	17	—	0.2900	—	L	13.10	0.5156	33/64
—	0.0180	—	77	—	0.0810	—	46	4.40	0.1732	—	—	7.40	0.2913	—	—	13.49	0.5312	17/32
0.50	0.0197	—	—	—	0.0820	—	45	—	0.1770	—	16	—	0.2950	—	M	13.50	0.5315	—
—	0.0200	—	76	2.10	0.0827	—	—	4.50	0.1771	—	—	7.50	0.2953	—	—	13.89	0.5469	35/64
—	0.0210	—	75	2.15	0.0846	—	—	—	0.1800	—	15	7.54	0.2968	19/64	—	14.00	0.5512	—
0.55	0.0217	—	—	—	0.0860	—	44	4.60	0.1811	—	—	7.60	0.2992	—	—	14.29	0.5625	9/16
—	0.0225	—	74	2.20	0.0866	—	—	—	0.1820	—	14	—	0.3020	—	N	14.50	0.5709	—
0.60	0.0236	—	—	2.25	0.0885	—	—	4.70	0.1850	—	13	7.70	0.3031	—	—	14.68	0.5781	37/64
—	0.0240	—	73	—	0.0890	—	43	4.75	0.1870	—	—	7.75	0.3051	—	—	15.00	0.5906	—
—	0.0250	—	72	2.30	0.0905	—	—	4.76	0.1875	3/16	—	7.80	0.3071	—	—	15.08	0.5937	19/32
0.65	0.0256	—	—	2.35	0.0925	—	—	4.80	0.1890	—	12	7.90	0.3110	—	—	15.48	0.6094	39/64
—	0.0260	—	71	—	0.0935	—	42	—	0.1910	—	11	7.94	0.3125	5/16	—	15.50	0.6102	—
—	0.0280	—	70	2.38	0.0937	3/32	—	4.90	0.1929	—	—	8.00	0.3150	—	—	15.88	0.6250	5/8
0.70	0.0276	—	—	2.40	0.0945	—	—	—	0.1935	—	10	—	0.3160	—	O	16.00	0.6299	—
—	0.0292	—	69	—	0.0960	—	41	—	0.1960	—	9	8.10	0.3189	—	—	16.27	0.6406	41/64
0.75	0.0295	—	—	2.45	0.0964	—	—	5.00	0.1968	—	—	8.20	0.3228	—	—	16.50	0.6496	—
—	0.0310	—	68	—	0.0980	—	40	—	0.1990	—	8	—	0.3230	—	P	16.67	0.6562	21/32
0.79	0.0312	1/32	—	2.50	0.0984	—	—	5.10	0.2008	—	—	8.25	0.3248	—	—	17.00	0.6693	—
0.80	0.0315	—	—	—	0.0995	—	39	—	0.2010	—	7	8.30	0.3268	—	—	17.06	0.6719	43/64
—	0.0320	—	67	—	0.1015	—	38	5.16	0.2031	13/64	—	8.33	0.3281	21/64	—	17.46	0.6875	11/16
—	0.0330	—	66	2.60	0.1024	—	—	—	0.2040	—	6	8.40	0.3307	—	—	17.50	0.6890	—
0.85	0.0335	—	—	—	0.1040	—	37	5.20	0.2047	—	—	—	0.3320	—	Q	17.86	0.7031	45/64
—	0.0350	—	65	2.70	0.1063	—	—	—	0.2055	—	5	8.50	0.3346	—	—	18.00	0.7087	—
0.90	0.0354	—	—	—	0.1065	—	36	5.25	0.2067	—	—	8.60	0.3386	—	—	18.26	0.7187	23/32
—	0.0360	—	64	2.75	0.1082	—	—	5.30	0.2086	—	—	—	0.3390	—	R	18.50	0.7283	—
—	0.0370	—	63	2.78	0.1094	7/64	—	—	0.2090	—	4	8.70	0.3425	—	—	18.65	0.7344	47/64
0.95	0.0374	—	—	—	0.1100	—	35	5.40	0.2126	—	—	8.73	0.3437	11/32	—	19.00	0.7480	—
—	0.0380	—	62	2.80	0.1102	—	—	—	0.2130	—	3	8.75	0.3445	—	—	19.05	0.7500	3/4
—	0.0390	—	61	—	0.1110	—	34	5.50	0.2165	—	—	8.80	0.3465	—	—	19.45	0.7656	49/64
1.00	0.0394	—	—	—	0.1130	—	33	5.56	0.2187	7/32	—	—	0.3480	—	S	19.50	0.7677	—
—	0.0400	—	60	2.90	0.1141	—	—	5.60	0.2205	—	—	8.90	0.3504	—	—	19.84	0.7812	25/32
—	0.0410	—	59	—	0.1160	—	32	—	0.2210	—	2	9.00	0.3543	—	—	20.00	0.7874	—
1.05	0.0413	—	—	3.00	0.1181	—	—	5.70	0.2244	—	—	—	0.3580	—	T	20.24	0.7969	51/64
—	0.0420	—	58	—	0.1200	—	31	5.75	0.2263	—	—	9.10	0.3583	—	—	20.50	0.8071	—
—	0.0430	—	57	3.10	0.1220	—	—	—	0.2280	—	1	9.13	0.3594	23/64	—	20.64	0.8125	13/16
1.10	0.0433	—	—	3.18	0.1250	1/8	—	5.80	0.2283	—	—	9.20	0.3622	—	—	21.00	0.8268	—
1.15	0.0452	—	—	3.20	0.1260	—	—	5.90	0.2323	—	—	9.25	0.3641	—	—	21.03	0.8281	53/64
—	0.0465	—	56	3.25	0.1279	—	—	—	0.2340	—	A	9.30	0.3661	—	—	21.43	0.8437	27/32
1.19	0.0469	3/64	—	—	0.1285	—	30	5.95	0.2344	15/64	—	—	0.3680	—	U	21.50	0.8465	—
1.20	0.0472	—	—	3.30	0.1299	—	—	6.00	0.2362	—	—	9.40	0.3701	—	—	21.83	0.8594	55/64
1.25	0.0492	—	—	3.40	0.1338	—	—	—	0.2380	—	B	9.50	0.3740	—	—	22.00	0.8661	—
1.30	0.0512	—	—	—	0.1360	—	29	6.10	0.2401	—	—	9.53	0.3750	3/8	—	22.23	0.8750	7/8
—	0.0520	—	55	3.50	0.1378	—	—	—	0.2420	—	C	—	0.3770	—	V	22.50	0.8858	—
1.35	0.0531	—	—	—	0.1405	—	28	6.20	0.2441	—	—	9.60	0.3780	—	—	22.62	0.8906	57/64
—	0.0550	—	54	3.57	0.1406	9/64	—	6.25	0.2460	—	D	9.70	0.3819	—	—	23.00	0.9055	—
1.40	0.0551	—	—	3.60	0.1417	—	—	6.30	0.2480	—	—	9.75	0.3838	—	—	23.20	0.9062	29/32
1.45	0.0570	—	—	—	0.1440	—	27	6.35	0.2500	1/4	E	9.80	0.3858	—	—	23.42	0.9219	59/64
1.50	0.0591	—	—	3.70	0.1457	—	—	6.40	0.2520	—	—	—	0.3860	—	W	23.50	0.9252	—
—	0.0595	—	53	—	0.1470	—	26	6.50	0.2559	—	—	9.90	0.3898	—	—	23.81	0.9375	15/16
1.55	0.0610	—	—	3.75	0.1476	—	—	—	0.2570	—	F	9.92	0.3906	25/64	—	24.00	0.9449	—
1.59	0.0625	1/16	—	—	0.1495	—	25	6.60	0.2598	—	—	10.00	0.3937	—	—	24.21	0.9531	61/64
1.60	0.0629	—	—	3.80	0.1496	—	—	—	0.2610	—	G	—	0.3970	—	X	24.50	0.9646	—
—	0.0635	—	52	—	0.1520	—	24	6.70	0.2638	—	—	—	0.4040	—	Y	24.61	0.9687	31/32
1.65	0.0649	—	—	3.90	0.1535	—	—	6.75	0.2657	17/64	—	10.32	0.4062	13/32	—	25.00	0.9843	—
1.70	0.0669	—	—	—	0.1540	—	23	6.75	0.2657	—	—	—	0.4130	—	Z	25.03	0.9844	63/64
—	0.0670	—	51	3.97	0.1562	5/32	—	—	0.2660	—	H	10.50	0.4134	—	—	25.40	1.0000	1

M = Millimeters, DE = Decimal Equivalents, F = Fractional, DN = Drill Number/Letter

Contents: Mammoth Set WSC-1390TB

Refer to Master Set Section for Photo and Description

Note: WSC-1390 Includes All Tools Only, Without Tool Storage Cabinets

Product Code	Description
1002MFRMH	3/8Dr Cl Trq Wr 100 F-Lb
10111	Hex Key Set Sh 11-pc
1020	OE WR 1/4x5/16
10213	Hex Key Set Lg 13-pc
1033C	OE WR 15/16x1
1037	OE WR 1-1/16x1-1/4
1037B	OE WR1-1/8x1-3/16
10600	DblHd FL WR 3/8x7/16
10602	DblHd FL WR 1/2x9/16
10604	DblHd FL WR 5/8x11/16
10606	DblHd FL WR 3/4x7/8
10650	FL NUT WR 9x 11mm
10652	FL NUT WR 10x 12mm
10654	FL NUT WR 13x 14mm
10656	FL NUT WR 15x 17mm
10658	FL NUT WR 19x 21mm
1-100-04-3-2	4 Hd SM File w/PlHdl
1-100-08-1-2	8 Hd BST File w/Hdle
1-100-08-2-2	8 Hd 2ND File w/Hdle
1-111-04-3-2	4 WRD SM File w/PlHdl
1112	Min OE WRChrSat 3/16
1113	Min OE WRChrSat 13/64
1114	Min OE WRChrSat 7/32
1115	Min OE WRChrSat 15/64
1116	Min OE WRChrSat 1/4
1118	Min OE WRChrSat 9/32
1120	Min OE WRChrSat 5/16
1122	Min OE WRChrSat 11/32
1124	Min OE WRChrSat 3/8
1128	Min OE WRChrSat 7/16
11312	Stby Comb WR 3/8
11314	Stby Comb WR 7/16
11316	Stby Comb WR 1/2
11318	Stby Comb WR 9/16
1132	Min OE WRChrSat 1/2
11320	Stby Comb WR 5/8
11322	Stby Comb WR 11/16
11324	Stby Comb WR 3/4
1136	Min OE WRChrSat 9/16
1140	Min OE WRChrSat 5/8
1-160-04-3-2	4 SQ SM File w/PlHdl
1-160-08-1-2	8 SQ BST File w/Hdle
1-170-04-3-2	4 3 SQ SM File w/PlHdl
11710	Stby Comb WR 10mm
11712	Stby Comb WR 12mm
11713	Stby Comb WR 13mm
11714	Stby Comb WR 14mm
11715	Stby Comb WR 15mm
11717	Stby Comb WR 17mm
11718	Stby Comb WR 18mm
1180	WRChrSat12pt 1 5/8
1182	WRChrSat12pt 1 11/16
1184	WRChrSat12pt 1 3/4
1186	WRChrSat12pt 1 13/16
1188	WRChrSat12pt 1 7/8
1190	WRChrSat12pt 2
11900	Fl Hd Comb WR 3/8
11901	Fl Hd Comb WR 7/16
11902	Fl Hd Comb WR 1/2
11903	Fl Hd Comb WR 9/16
11904	Fl Hd Comb WR 5/8
11905	Fl Hd Comb WR 11/16
11906	Fl Hd Comb WR 3/4
1191	WRChrSat12pt 2 1/16
1192	WRChrSat12pt 2 1/8
1193	WRChrSat12pt 2 3/16
1194	WRChrSat12pt 2 1/4
1195	WRChrSat12pt 2 3/8
11952	Ofs Comb WR 3/8
11953	Ofs Comb WR 7/16
11954	Ofs Comb WR 1/2
11955	Ofs Comb WR 9/16
11956	Ofs Comb WR 5/8
11957	Ofs Comb WR 11/16
11958	Ofs Comb WR 3/4
11959	Ofs Comb WR 13/16
11960	Ofs Comb WR 7/8
1197	WRChrSat12pt 2 1/2
1206MRC	6mm Rat Comb WR
1207MSC	WRChrSat12pt 7mm
1208MRC	Rev Rat Comb WR 8mm
1208MRCF	Fl Hd Rat Comb WR 8mm
1208MRCS	Stby Rat Comb WR 8mm
1208MSC	WRChrSat12pt 8mm
1208RC	1/4 Rat Comb WR
1209MRC	Rev Rat Comb WR 9mm
1209MRCF	Fl Hd Rat Comb WR 9mm
1209MRCS	Stby Rat Comb WR 9mm
1209MSC	WRChrSat12pt 9mm
1-210-04-3-2	4 1/2RD SM File w/PlHdl
1-210-08-1-2	8 1/2RD BST File w/Hdle
1210MRC	Rev Rat Comb WR 10mm
1210MRCF	Fl Hd Rat Comb WR 10mm
1210MRCS	Stby Rat Comb WR 10mm
1210MSC	WRChrSat12pt 10mm
1210RC	Rev Rat Comb WR 5/16
1210RCF	Fl-Hd Rat Comb WR 5/16
1210RCS	Stby Rat Comb WR 5/16
1210SC	WRChrSat12pt 5/16
1211MRC	Rev Rat Comb WR 11mm
1211MRCF	Fl Hd Rat Comb WR 11mm
1211MRCS	Stby Rat Comb WR 11mm
1211MSC	WRChrSat12pt 11mm
1212MRC	Rev Rat Comb WR 12mm
1212MRCF	Fl Hd Rat Comb WR 12mm
1212MRCS	Stby Rat Comb WR 12mm
1212MSC	WRChrSat12pt 12mm
1212RC	Rev Rat Comb WR 3/8
1212RCF	Fl-Hd Rat Comb WR 3/8
1212RCS	Stby Rat Comb WR 3/8
1212SC	WRChrSat12pt 3/8
1213MRC	Rev Rat Comb WR 13mm
1213MRCF	Fl Hd Rat Comb WR 13mm
1213MRCS	Stby Rat Comb WR 13mm
1213MSC	WRChrSat12pt 13mm
1214MRC	Rev Rat Comb WR 14mm
1214MRCF	Fl Hd Rat Comb WR 14mm
1214MRCS	Stby Rat Comb WR 14mm
1214MSC	WRChrSat12pt 14mm
1214RC	Rev Rat Comb WR 7/16
1214RCF	Fl-Hd Rat Comb WR 7/16
1214RCS	Stby Rat Comb WR 7/16
1214SC	WRChrSat12pt 7/16
1215MRC	Rev Rat Comb WR 15mm
1215MRCF	Fl Hd Rat Comb WR 15mm
1215MRCS	Stby Rat Comb WR 15mm
1215MSC	WRChrSat12pt 15mm
1216MRC	Rev Rat Comb WR 16mm
1216MRCF	Fl Hd Rat Comb WR 16mm
1216MRCS	Stby Rat Comb WR 16mm
1216RC	Rev Rat Comb WR 1/2
1216RCF	Fl-Hd Rat Comb WR 1/2
1216RCS	Stby Rat Comb WR 1/2
1216SC	WRChrSat12pt 1/2
1217MRC	Rev Rat Comb WR 17mm
1217MRCF	Fl Hd Rat Comb WR 17mm
1217MRCS	Stby Rat Comb WR 17mm
1217MSC	WRChrSat12pt 17mm
1218MRC	Rev Rat Comb WR 18mm
1218MRCF	Fl Hd Rat Comb WR 18mm
1218MRCS	Stby Rat Comb WR 18mm
1218MSC	WRChrSat12pt 18mm
1218RC	Rev Rat Comb WR 9/16
1218RCF	Fl-Hd Rat Comb WR 9/16
1218RCS	Stby Rat Comb WR 9/16
1218SC	WRChrSat12pt 9/16
1219MRC	Rev Rat Comb WR 19mm
1219MRCF	Fl Hd Rat Comb WR 19mm
1219MRCS	Stby Rat Comb WR 19mm
1219MSC	WRChrSat12pt 19mm
1220RC	Rev Rat Comb WR 5/8
1220RCF	Fl-Hd Rat Comb WR 5/8
1220RCS	Stby Rat Comb WR 5/8
1220SC	WRChrSat12pt 5/8
1221MRC	Rev Rat Comb WR 21mm
1221MSC	WRChrSat12pt 21mm
1222MRC	Rev Rat Comb WR 22mm
1222MSC	WRChrSat12pt 22mm
1222RC	Rev Rat Comb WR 11/16
1222RCF	Fl-Hd Rat Comb WR 11/16
1222RCS	Stby Rat Comb WR 11/16
1222SC	WRChrSat12pt 11/16
1224MRC	Rev Rat Comb WR 24mm
1224MSC	WRChrSat12pt 24mm
1224RC	Rev Rat Comb WR 3/4
1224RCF	Fl-Hd Rat Comb WR 3/4
1224RCS	Stby Rat Comb WR 3/4
1224SC	WRChrSat12pt 3/4
1224TSB	Str Bx Tub WR-3/4
1225MRC	Rev Rat Comb WR 25mm
1226RC	Rev Rat Comb WR 13/16
1226SC	WRChrSat12pt 13/16
1226TSB	Str Bx Tub WR-13/16
1227MSC	WRChrSat12pt 27mm
1228RC	Rev Rat Comb WR 7/8
1228SC	WRChrSat12pt 7/8
1228TSB	Str Bx Tub WR-7/8
1-230-04-3-2	4 RD SM File w/PlHdl
1-230-08-1-2	8 RD BST File w/Hdle
1230MSC	WRChrSat12pt 30mm
1230RC	Rev Rat Comb WR 15/16
1230SC	WRChrSat12pt 15/16
1230TSB	Str Bx Tub WR-15/16
1232MSC	WRChrSat12pt 32mm
1232RC	Rev Rat Comb WR 1
1232SC	WRChrSat12pt 1
1232TOE	OE Tub WR-1
1232TSB	Str Bx Tub WR-1
1234MSC	WRChrSat12pt 34mm
1234SC	WRChrSat12pt 1-1/16
1234TOE	OE Tub WR-1-1/16
1234TSB	Str Bx Tub WR-1-1/16
1236MSC	WRChrSat12pt 36mm
1236SC	WRChrSat12pt 1-1/8
1236TOB	Off Bx Tub Wr-1-1/8
1236TOE	OE Tub WR-1-1/8
1236TSB	Str Bx Tub WR-1-1/8
1240SC	WRChrSat12pt 1-1/4
1240TOB	Off Bx Tub WR-1-1/4-32mm
1240TOE	OE Tub WR-1-1/4-32mm
1240TSB	Str Bx Tub WR-1-1/4-32mm
1242	WRChrSat12pt 1-5/16
1242TOB	Off Bx Tub WR-1-5/16-33mm
1242TOE	OE Tub WR-1-5/16-33mm
1244	WRChrSat12pt 1 3/8
1244TOE	OE Tub WR-1-3/8-35mm
1246	WRChrSat12pt 1 7/16
1246TOE	OE Tub WR-1-7/16-36mm
1248	WRChrSat12pt 1 1/2
1248TOB	Off Bx Tub WR-1-1/2-38mm
1248TOE	OE Tub WR-1-1/2-38mm
1252TOB	Off Bx Tub WR-1-5/8-41mm
1256TOB	Off Bx Tub WR-1-3/4-44mm
12601	Dbl Fl Hd WR 3/8x7/16
12603	Dbl Fl Hd WR 1/2x9/16
12605	Dbl Fl Hd WR 5/8x11/16
12607	Dbl Fl Hd WR 3/4x7/8
12-610	3/8Dr DpImSkt6pt 5/16
12-612	3/8Dr DpImSkt6pt 3/8
12-614	3/8Dr DpImSkt6pt 7/16
12-616	3/8Dr DpImSkt6pt 1/2
12-618	3/8Dr DpImSkt6pt 9/16
12-620	3/8Dr DpImSkt6pt 5/8
12-622	3/8Dr DpImSkt6pt 11/16
12-624	3/8Dr DpImSkt6pt 3/4
12-626	3/8Dr DpImSkt6pt 13/16
12-628	3/8Dr DpImSkt6pt 7/8
12-630	3/8Dr DpImSkt6pt 15/16
12-632	3/8Dr DpImSkt6pt 1
12M-607	3/8Dr DpImSkt6pt 7mm
12M-608	3/8Dr DpImSkt6pt 8mm
12M-609	3/8Dr DpImSkt6pt 9mm
12M-610	3/8Dr DpImSkt6pt 10mm
12M-611	3/8Dr DpImSkt6pt 11mm
12M-612	3/8Dr DpImSkt6pt 12mm
12M-613	3/8Dr DpImSkt6pt 13mm
12M-614	3/8Dr DpImSkt6pt 14mm
12M-615	3/8Dr DpImSkt6pt 15mm
12M-616	3/8Dr DpImSkt6pt 16mm
12M-617	3/8Dr DpImSkt6pt 17mm
12M-618	3/8Dr DpImSkt6pt 18mm
12M-619	3/8Dr DpImSkt6pt 19mm
12M-620	3/8Dr DpImSkt6pt 20mm
12M-621	3/8Dr DpImSkt6pt 21mm
12M-622	3/8Dr DpImSkt6pt 22mm
12M-623	3/8Dr DpImSkt6pt 23mm
12M-624	3/8Dr DpImSkt6pt 24mm
13213	Bl End Hex Key Lg 13-pc
13406	Chr Adj WRes 6
13408	Chr Adj WRes 8
13410	Chr Adj WRes 10
13412	Chr Adj WRes 12
13418	18 Chr Adj WR Pol Hd
13518	Cast Iron Pipe WR 8
13522	Cast Iron Pipe WR 12
13526	Cast Iron Pipe WR 18
13609	Bl End Hex KeyLgMet13-pc
13625	15 Const Adj WR
14-612	1/2Dr DpImSkt6pt 3/8
14-614	1/2Dr DpImSkt6pt 7/16
14-616	1/2Dr DpImSkt6pt 1/2
14-618	1/2Dr DpImSkt6pt 9/16
14-620	1/2Dr DpImSkt6pt 5/8
14-622	1/2Dr DpImSkt6pt11/16
14-624	1/2Dr DpImSkt6pt 3/4
14-626	1/2Dr DpImSkt6pt13/16
14-628	1/2Dr DpImSkt6pt 7/8
14-630	1/2Dr DpImSkt6pt15/16
14-632	1/2Dr DpImSkt6pt 1
14-634	1/2Dr DpImSkt6pt 1-1/16
14-636	1/2Dr DpImSkt6pt 1-1/8
14-638	1/2Dr DpImSkt6pt 1-3/16
14-640	1/2Dr DpImSkt6pt 1-1/4
14-642	1/2Dr DpImSkt6pt 1-5/16
14-644	1/2Dr DpImSkt6pt 1-3/8
14-646	1/2Dr DpImSkt6pt 1-7/16
14-648	1/2Dr DpImSkt6pt 1-1/2
14M-610	1/2Dr DpImSkt6pt 10mm
14M-611	1/2Dr DpImSkt6pt 11mm
14M-612	1/2Dr DpImSkt6pt 12mm
14M-613	1/2Dr DpImSkt6pt 13mm
14M-614	1/2Dr DpImSkt6pt 14mm
14M-615	1/2Dr DpImSkt6pt 15mm
14M-616	1/2Dr DpImSkt6pt 16mm
14M-617	1/2Dr DpImSkt6pt 17mm
14M-618	1/2Dr DpImSkt6pt 18mm
14M-619	1/2Dr DpImSkt6pt 19mm
14M-620	1/2Dr DpImSkt6pt 20mm
14M-621	1/2Dr DpImSkt6pt 21mm
14M-622	1/2Dr DpImSkt6pt 22mm
14M-623	1/2Dr DpImSkt6pt 23mm
14M-624	1/2Dr DpImSkt6pt 24mm
14M-625	1/2Dr DpImSkt6pt 25mm
14M-626	1/2Dr DpImSkt6pt 26mm
14M-627	1/2Dr DpImSkt6pt 27mm
14M-629	1/2Dr DpImSkt6pt 29mm
14M-630	1/2Dr DpImSkt6pt 30mm
14M-632	1/2Dr DpImSkt6pt 32mm
14M-634	1/2Dr DpImSkt6pt 34mm
14M-635	1/2Dr DpImSkt6pt 35mm
14M-636	1/2Dr DpImSkt6pt 36mm
16-624	3/4Dr DpImSkt6pt 3/4
16-626	3/4Dr DpImSkt6pt13/16
16-628	DpImSkt6pt 7/8
16-630	DpImSkt6pt 15/16
16-632	DpImSkt6pt 1
16-634	DpImSkt6pt 1 1/16
16-636	DpImSkt6pt 1 1/8
16-640	DpImSkt6pt 1 1/4
16-642	DpImSkt6pt 1 5/16
16-644	3/4Dr DpImSkt6pt 1-3/8
16-646	3/4Dr DpImSkt6pt 1-7/16
16-648	DpImSkt6pt 1 1/2
16-650	3/4Dr DpImSkt6pt 1-9/16
16-652	3/4Dr DpImSkt6pt 1-5/8
16-654	3/4Dr DpImSkt6pt 1-11/16
16-656	3/4Dr DpImSkt6pt 1-3/4
16-658	3/4Dr DpImSkt6pt 1-13/16
16-660	3/4Dr DpImSkt6pt 1-7/8
16-664	3/4Dr DpImSkt6pt 2
1723	OE WR 3/8x7/16
1725	OE WR 7/16x1/2
1725B	OE WR 1/2x9/16
1727	OE WR 9/16x5/8
1729B	OE WR 11/16x3/4
1731B	OE WR 13/16x7/8
2-02B	3/8Dr Im Ext 3
20401	20oz FG Crv Claw Hmr
20544	16oz Bl PN FG Hdle Hmr
20545	24oz Bl PN FG Hdle Hmr
20651	48oz CrPN FG LgHdl Hmr
20678	32ozDrlg FG Hdle Hmr
208	Mini Hksw Alum Hdle 10
2-103A	3/8Dr Im Ext 3
2-106A	3/8Dr Im Ext 6
2-140B	3/8Dr Im U-Joint
21661	2pc PryBar
2203-8	Diagonal Cutting Plier Straight ergo® 8"
222D	Alligator Pl 6
223D	Alligator Pl 7-1/2
224D	Alligator Pl 9-1/2
23101	6-1/4 Sl Jt Pl
23103	9-3/4 Sl Jt Pl
23107	15-3/4 Gr Jt Pl 9 Pos
23201	CrvJaw w/Ctr LckPl 5
23202	CrvJaw w/Ctr LckPl 7
23203	CrvJaw w/Ctr LckPl 10
23301	CrvJaw wire Ctr LckPl 5
23302	CrvJaw wire Ctr LckPl 7
23305	Str Jaw LckPl 10
23310	Lg Ns wire Ctr LckPls 9
23320	Lck C-Cl LckPl 6
23403	8" Linesman Plier
23406	6-1/4" Heavy Duty Diagonal Cutting

Contents: Mammoth Set WSC-1390TB (con't)

Product Code	Description
23409	6-1/4" Bent Nose
23410	6-1/4" Long Nose
23411	8" Long Nose
23503	FrEnd Strip-Cut/Crimper
23506	Heavy Duty Stripper/Ctr
23512	Romex Tl Dual Type
23530	Coax Cable Tl
23535	Cg Super Stripper 20-30
23541	Elec Mini-Ctr 5-1/2
23542	Elec Mini-Stripper 5-1/2
23543	Elec Mini-Crimper 5-1/2
23603	9 Lnms Dipped Hdles
23801	Conv Ret Rg Pl Cap 2
23803	Conv Ret Rg Pl Cap 1
24201	Cab Scr 1/8x4
24205	Sl Scr 3/16x4
24207	Cab Scr 3/16x3
24211	Cab Scr 3/16x6
24213	Cab Scr 3/16x10
24217	Sl Scr 1/4x1 1/2
24219	Sl Scr 1/4x4
24237	Sl Scr 5/16x6
24239	5/16x8 Rd Sl Bmd Hdle
24241	Sl Scr 3/8x8
24243	3/8x12 Rd Sl Bmd Hdle
24249	Ph Scr # 1x3
24251	Ph Scr # 2x1 1/2
24253	Ph Scr # 2x4
24259	#3x6 Ph Bmd Hdle
24263	Torx Scr T10x4
24265	Torx Scr T15x4
24267	Torx Scr T20x4
24269	Torx Scr T25x4
24271	Torx Scr T27x4
24273	Torx Scr T30x4
24401	3/16 Csh Gr Ntdrv
24403	1/4 Csh Gr Ntdrv
24405	5/16 Csh Gr Ntdrv
24407	11/32 Csh Gr Ntdrv
24409	3/8 Csh Gr Ntdrv
24411	7/16 Csh Gr Ntdrv
24413	1/2 Csh Gr Ntdrv
2-4A	3/8Dr Im Adp3/8Fx1/2M
24TH	Tub WR Hdle-24
2503MFRMH	1/2Dr Cl Trq WR 250 F-Lb
2-608	3/8Dr ImSkt6pt 1/4
2-610	3/8Dr ImSkt6pt 5/16
2-612	3/8Dr ImSkt6pt 3/8
2-614	3/8Dr ImSkt6pt 7/16
2-616	3/8Dr ImSkt6pt 1/2
2-618	3/8Dr ImSkt6pt 9/16
2-620	3/8Dr ImSkt6pt 5/8
2-622	3/8Dr ImSkt6pt 11/1
2-624	3/8Dr ImSkt6pt 3/4
2-626	3/8Dr ImSkt6pt 13/1
2-628	3/8Dr ImSkt6pt 7/8
2628G-180	Side Cutting Combination Plier ergo® 7"
2-630	3/8Dr ImSkt6pt 15/1
2-632	3/8Dr ImSkt6pt 1
2653-9	Lnms's Pl Cmf Gr 9 -1/2
28201	Av Snips Left
28203	Av Snips Right
28205	Av Snips Str
28301	Str Pat Tin Snips 7
28307	Str Pat Tin Snips 12
28449	Pch & Chs Holder
2M-607	Std ImSkt6pt 7mm
2M-608	Std ImSkt6pt 8mm
2M-609	Std ImSkt6pt 9mm
2M-610	Std ImSkt6pt 10mm
2M-611	Std ImSkt6pt 11mm
2M-612	Std ImSkt6pt 12mm
2M-613	Std ImSkt6pt 13mm
2M-614	Std ImSkt6pt 14mm
2M-615	Std ImSkt6pt 15mm
2M-616	Std ImSkt6pt 16mm
2M-617	Std ImSkt6pt 17mm
2M-618	Std ImSkt6pt 18mm
2M-619	Std ImSkt6pt 19mm
30009	1/4 Fx3/8 M Adapter
300-14-F15/16-HP	TlBx Saw Pl14 15TPI
31008	3/8 Fx1/4 M Adapter
31009	3/8 Fx1/2 M Adapter
31301	3/8Dr SpkPl Skt 5/8
31303	3/8Dr SpkPl Skt 13/16
32008	1/2 Fx3/8 M Adapter
32412	1/2Dr Skt 3/8
32414	1/2Dr Skt 7/16
32416	1/2Dr Skt 1/2
32418	1/2Dr Skt 9/16
32420	1/2Dr Skt 5/8
32422	1/2Dr Skt 11/16
32424	1/2Dr Skt 3/4
32426	1/2Dr Skt 13/16
32428	1/2Dr Skt 7/8
32430	1/2Dr Skt 15/16
32432	1/2Dr Skt 1
32434	1/2Dr Skt 1 1/16
32436	1/2Dr Skt 1 1/8
32438	1/2Dr Skt 1 3/16
32440	1/2Dr Skt 1 1/4
32448	1/2Dr Skt 1 1/2
325	Prof Hksw Hdle 12
33008	3/4F*1/2MAdapter
35040	1/4Dr ScrBt Skt Sl 5/32
35041	1/4Dr ScrBt Skt Sl 7/32
35042	1/4Dr ScrBt Skt Sl 9/32
35050	1/4Dr ScrBt Skt Ph # 0
35051	1/4Dr ScrBt Skt Ph # 1
35052	1/4Dr ScrBt Skt Ph # 2
35080	1/4Dr Torx Bit Skt T10
35081	1/4Dr Torx Bit Skt T15
35082	1/4Dr Torx Bit Skt T20
35083	1/4Dr Torx Bit Skt T25
35084	1/4Dr Torx Bit Skt T27
35085	1/4Dr Torx Bit Skt T30
35182	3/8Dr Torx Bit Skt T25
35183	3/8Dr Torx Bit Skt T27
35184	3/8Dr Torx Bit Skt T30
35185	3/8Dr Torx Bit Skt T40
35186	3/8Dr Torx Bit Skt T45
35187	3/8Dr Torx Bit Skt T47
35188	3/8Dr Torx Bit Skt T50
35192	3/8Dr Torx Bit Skt T25
35193	3/8Dr Torx Bit Skt T27
35194	3/8Dr Torx Bit Skt T30
35195	3/8Dr Torx Bit Skt T40
35196	3/8Dr Torx Bit Skt T45
35197	3/8Dr Torx Bit Skt T47
35198	3/8Dr Torx Bit Skt T50
36TH	Tub WR Hdle-36
3816-300	Tung Carbide Hksw Bl 12
38216	3/4Dr Hex ImSkt 1/2
38218	3/4Dr Hex ImSkt 9/16
38220	3/4Dr Hex ImSkt 5/8
38224	3/4Dr Hex ImSkt 3/4
38226	3/4Dr Hex ImSkt 13/16
38228	3/4Dr Hex ImSkt 7/8
38232	3/4Dr Hex ImSkt 1
38238	3/4Dr Hex ImSkt 1 1/8
38240	3/4Dr Hex ImSkt 1 1/4
3840-100-10-SC-1P	BiRecipBL 4 10TPI
3840-100-18-SC-1P	BiRecipBL 4 18TPI
3840-100-24-ST-1P	BiRecipBL 4 24TPI U-Thg
3840-100-6-ST-1P	BiRecipBL 4 6TPI U-Thg
3840-150-10-ST-1P	BiRecipBL 6 10TPI U-Thg
3840-150-14-ST-1P	BiRecipBL 6 14TPI U-Thg
3840-150-18-ST-1P	BiRecipBL 6 18TPI U-Thg
3840-150-24-ST-1P	BiRecipBL 6 24TPI U-Thg
3840-150-5/8-SL-1P	BiRecipBL 6 5/8TPI
3840-150-7-SL-1P	BiRecipBL 6 7TPI
396-LAP	Fldg Saw Bmd 8 7TPI
40000	1/4x6 GsktScpr BmdHdl
40052	QckBl Ut Knife5pk 025
40058	Fldg Ut Knife
40072	QckBl DispBulk
40150	Pick-Up Tl BmdHdl
40201	4pc MiniPick/Hook
40221	12 Strap WR
40251	4pc Ut Tl Set BmdHdl
40639	1/2Dr Im Adp1/2 Fx3/4
40701	3/4Dr Im Adp 3/4 Fx1
4-102	1/2Dr Im Ext 3-1/2
4-105A	1/2Dr Im Ext 5
4-110A	1/2Dr Im Ext10
4-140B	1/2Dr Im U-Joint
42302	Std Seat Creeper
4-2A	1/2Dr Im Adp1/2 Fx3/8
43605	Tube Ctr 1-1/8
43618	Pl Hose Ctr
4559-24	Bolt Ctr Cmf Grs 24
4-612	1/2Dr ImSkt6pt 3/8
4-614	1/2Dr ImSkt6pt7/16
4-616	1/2Dr ImSkt6pt1/2
4-618	1/2Dr ImSkt6pt9/16
4-620	1/2Dr ImSkt6pt5/8
4-622	1/2Dr ImSkt6pt11/16
4-624	1/2Dr ImSkt6pt3/4
4-626	1/2Dr ImSkt6pt13/16
4-628	1/2Dr ImSkt6pt7/8
4-630	1/2Dr ImSkt6pt15/16
4-632	1/2Dr ImSkt6pt1
4-634	1/2Dr ImSkt6pt1-1/16
4-636	1/2Dr ImSkt6pt1-1/8
4-638	1/2Dr ImSkt6pt1-3/16
4-640	1/2Dr ImSkt6pt1-1/4
4-642	1/2Dr ImSkt6pt1-5/16
4-644	1/2Dr ImSkt6pt1-3/8
4-646	1/2Dr ImSkt6pt1-7/16
4-648	1/2Dr ImSkt6pt1-1/2
471	Adj Hk Spr 3/4 To 2
472	Adj Hk Spr 1-1/4 To 3
474	Adj Hk Spr 2 To 4-3/4
4M-610	1/2Dr ImSkt6pt 10mm
4M-611	1/2Dr ImSkt6pt 11mm
4M-612	1/2Dr ImSkt6pt 12mm
4M-613	1/2Dr ImSkt6pt 13mm
4M-614	1/2Dr ImSkt6pt 14mm
4M-615	1/2Dr ImSkt6pt 15mm
4M-616	1/2Dr ImSkt6pt 16mm
4M-617	1/2Dr ImSkt6pt 17mm
4M-618	1/2Dr ImSkt6pt 18mm
4M-619	1/2Dr ImSkt6pt 19mm
4M-620	1/2Dr ImSkt6pt 20mm
4M-621	1/2Dr ImSkt6pt 21mm
4M-622	1/2Dr ImSkt6pt 22mm
4M-623	1/2Dr ImSkt6pt 23mm
4M-624	1/2Dr ImSkt6pt 24mm
4M-625	1/2Dr ImSkt6pt 25mm
4M-626	1/2Dr ImSkt6pt 26mm
4M-627	1/2Dr ImSkt6pt 27mm
4M-629	1/2Dr ImSkt6pt 29mm
4M-630	1/2Dr ImSkt6pt 30mm
4M-632	1/2DrImSkt6pt 32m
4M-634	1/2Dr ImSkt6pt 34mm
4M-636	1/2Dr ImSkt6pt 36mm
50721	3Drw 34 Cart-Rb Red
50855	1 Shlf 37 Hd Sdcb Red
6004MFRMH	3/4Dr Cl Trq WR 600 F-Lb
6-107	3/4Dr Im Ext 7
6-110	3/4Dr Im Ext 9-3/4
6-113	3/4Dr Im Ext 12-3/4
6-140B	3/4Dr Im U-Joint
6-1x	Ret Rg
625	Scrp1 Triple
625-DROP	Drop-Shape Bl625 Scrp
625-PEAR	Pear-Shape Bl625 Scrp
625-RD	RD Bl625 Scrp
6-4A	3/4Dr ImAdp 3/4 Fx1/2M
6-618A	3/4Dr ImSkt6pt 9/16
6-620A	3/4Dr ImSkt6pt 5/8
6-622A	3/4Dr ImSkt6pt 11/16
6-624A	Std ImSkt6pt 3/4
6-626A	Std ImSkt6pt 13/16
6-628A	Std ImSkt6pt 7/8
6-630A	Std ImSkt6pt 15/16
6-632A	Std ImSkt6pt 1
6-634A	Std ImSkt6pt 1 1/16
6-636	Std ImSkt6pt 1 1/8
6-640	Std ImSkt6pt 1 1/4
6-642	Std ImSkt6pt 1 5/16
6-644	Std ImSkt6pt 1 3/8
6-646	Std ImSkt6pt 1 7/16
6-648	Std ImSkt6pt 1 1/2
665	Scrp2-1/2 Dbl Bl
6-652	Std ImSkt6pt 1 5/8
6-654	3/4Dr ImSkt6pt1-11/16
6-656	3/4Dr ImSkt6pt 1-3/4
6-658	3/4Dr ImSkt6pt1-13/16
6-660	3/4Dr ImSkt6pt 1-7/8
6-662	3/4Dr ImSkt6pt1-15/16
6-664	3/4Dr ImSkt6pt2
6-666	3/4Dr ImSkt6pt2-1/16
6-670	3/4Dr ImSkt6pt2-3/16
6-672	3/4Dr ImSkt6pt2-1/4
6-676	3/4Dr ImSkt6pt2-3/8
7029B	BxWRChrSat12pt 11/16x3/4
7033C	BxWRChrSat12pt 15/16x1
7723	BxWRChrSat12pt 3/8x7/16
7725B	BxWRChrSat12pt 1/2x9/16
7727A	BxWRChrSat12pt 5/8x11/16
7731A	BxWRChrSat12pt 3/4x7/8
7731B	BxWRChrSat12pt 13/16x7/8
808050S-22	Ratcheting Scr Set
8223	Adj Joint Pls 8
8225	Adj Joint Pls 12
860114	Bi Hksw Bl 12 18TPI 10P
860124	Bi Hksw Bl 12 24TPI 10P
862017	Prof Holesaw Set 17pc
87032	Stud Rem/Inst Set
87079	10 Ton Gear Set
9031RUS	Blkx-Wide Adj WR 8
9070RPUS	Blk Adj/Pipe WR 6
9072RPUS	Blk Adj/Pipe WR 10
9-12-51/3806-KP	Bws w/Bws & Hack Bl
9-467-00-0-0	File Cleaner
B-101	3/8Dr Ext 1 1/2
B-108	3/8Dr Ext 3
B-110	3/8Dr Ext 6
B-115	3/8Dr Ext 11
B-118	3/8Dr Ext 18
B-1208	Skt12pt 1/4
B-1210	Skt12pt 5/16
B-1212	Skt12pt 3/8
B-1214	Skt12pt 7/16
B-1216	Skt12pt 1/2
B-1218	Skt12pt 9/16
B-1220	Skt12pt 5/8
B-1222	Skt12pt 11/16
B-1224	Skt12pt 3/4
B-1226	Skt12pt 13/16
B-1228	Skt12pt 7/8
B-1230	Skt12pt 15/16
B-1232	Skt12pt 1
B-140A	3/8Dr U-Joint
B-15	3/8Dr Speeder
B-20A	3/8Dr Sliding T Hdle
B-40A	3/8Dr FlHdl
B-52EHA	3/8Dr EncHd Rat 8
B-52EHLA	3/8Dr EncHd Rat 10-3/4
B-70	Chr Ratchet Spinner
BA-10A	Sh HexBtSkt 5/16
BA-10A-3P	3/8Dr Ph Skt 3-Pt
BA-10A-3S	3/8Dr SlSkt 9/32x045
BA-10A-4S	3/8Dr SlSkt 5/16x055
BA-10HBA	Bl HexBtSkt 5/16
BA-10LA	Lg HexBtSkt 5/16
BA-12A	Sh HexBtSkt 3/8
BA-12A-4P	3/8Dr Ph Skt 4-Pt
BA-12HBA	Bl HexBtSkt 3/8
BA-12LA	Lg HexBtSkt 3/8
BA-4A	Sh HexBtSkt 1/8
BA-4HBA	Bl HexBtSkt 1/8
BA-4LA	Lg HexBtSkt 1/8
BA-5A	Sh HexBtSkt 5/32
BA-5A-1S	3/8Dr SlSkt 3/16x032
BA-5HBA	Bl HexBtSkt 5/32
BA-5LA	Lg HexBtSkt 5/32
BA-6A	Sh HexBtSkt 3/16
BA-6HBA	Bl HexBtSkt 3/16
BA-6LA	Lg HexBtSkt 3/16
BA-7A	Sh HexBtSkt 7/32
BA-7A-1P	3/8Dr Ph Skt 1-Pt
BA-7A-2P	3/8Dr Ph Skt 2-Pt
BA-7A-2S	3/8Dr SlSkt 7/32x040
BA-7HBA	Bl HexBtSkt 7/32
BA-7LA	Lg HexBtSkt 7/32
BA-8A	Sh HexBtSkt 1/4
BA-8HBA	Bl HexBtSkt 1/4
BA-8LA	Lg HexBtSkt 1/4
BB-526	3/8Dr Penta-Skt
BD-1208	Dp Skt12pt 1/4
BD-1210	Dp Skt12pt 5/16
BD-1212	Dp Skt12pt 3/8
BD-1214	Dp Skt12pt 7/16
BD-1216	Dp Skt12pt 1/2
BD-1218	Dp Skt12pt 9/16
BD-1220	Dp Skt12pt 5/8
BD-1222	Dp Skt12pt 11/16
BD-1224	Dp Skt12pt 3/4
BD-1226	Dp Skt12pt 13/16
BD-1228	Dp Skt12pt 7/8
BD-1230	Dp Skt12pt 15/16
BD-1232	Dp Skt12pt 1
BD-808	3/8Dr Skt 8-Pt 1/4
BD-810	3/8Dr Skt 8-Pt 5/16
BD-812	3/8Dr Skt 8-Pt 3/8
BD-814	3/8Dr Skt 8-Pt 7/16
BD-816	3/8Dr Skt 8-Pt 1/2
BD-818	3/8Dr Skt 8-Pt 9/16
BD-820	3/8Dr Skt 8-Pt 5/8
BFE-8	3/8Dr Flible Ext 8
BHMD-30	3/8Dr Hd ImpDrr
BM-1206	3/8Dr Std12pt Skt 6mm
BM-1207	3/8Dr Std12pt Skt 7mm
BM-1208	3/8Dr Std12pt Skt 8mm
BM-1209	3/8Dr Std12pt Skt 9mm
BM-1210	3/8Dr Std12pt Skt 10mm
BM-1211	3/8Dr Std12pt Skt 11mm
BM-1212	3/8Dr Std12pt Skt 12mm
BM-1213	3/8Dr Std12pt Skt 13mm
BM-1214	3/8Dr Std12pt Skt 14mm
BM-1215	3/8Dr Std12pt Skt 15mm
BM-1216	3/8Dr Std12pt Skt 16mm
BM-1217	3/8Dr Std12pt Skt 17mm
BM-1218	3/8Dr Std12pt Skt 18mm
BM-1219	3/8Dr Std12pt Skt 19mm
BM-1220	3/8Dr Std12pt Skt 20mm
BM-1221	3/8Dr Std12pt Skt 21mm

Contents: Mammoth Set WSC-1390TB (con't)

Product Code	Description
BM-1222	3/8Dr Std12pt Skt 22mm
BM-1223	3/8Dr Std12pt Skt 23mm
BM-1224	3/8Dr Std12pt Skt 24mm
BM-1226	3/8Dr Std12pt Skt 26mm
BMD-606	3/8Dr Dp 6 PT Skt 6mm
BMD-607	3/8Dr Dp 6 PT Skt 7mm
BMD-608	3/8Dr Dp 6 PT Skt 8mm
BMD-609	3/8Dr Dp 6 PT Skt 9mm
BMD-610	3/8Dr Dp 6 PT Skt 10mm
BMD-611	3/8Dr Dp 6 PT Skt 11mm
BMD-612	3/8Dr Dp 6 PT Skt 12mm
BMD-613	3/8Dr Dp 6 PT Skt 13mm
BMD-614	3/8Dr Dp 6 PT Skt 14mm
BMD-615	3/8Dr Dp 6 PT Skt 15mm
BMD-616	3/8Dr Dp 6 PT Skt 16mm
BMD-617	3/8Dr Dp 6 PT Skt 17mm
BMD-618	3/8Dr Dp 6 PT Skt 8mm
BMD-619	3/8Dr Dp 6 PT Skt 19mm
BMD-620	3/8Dr Dp 6 PT Skt 20mm
BMD-622	3/8Dr Dp 6 PT Skt 22mm
BMD-623	3/8Dr Dp 6 PT Skt 23mm
BMD-624	3/8Dr Dp 6 PT Skt 24mm
BMD-625	3/8Dr Dp 6 PT Skt 25mm
BS-05B	3/8Dr Adp1/2 Fx3/8 M Blk
BS-12B	3/8Dr Adp1/2 Fx3/8 M Blk
BU-1212	U-Skt12pt 3/8
BU-1214	U-Skt12pt 7/16
BU-1216	U-Skt12pt 1/2
BU-1218	U-Skt12pt 9/16
BU-1220	U-Skt12pt 5/8
BU-1222	U-Skt12pt 11/16
BU-1224	U-Skt12pt 3/4
BWM-0810	DblHd 10°Ofs BxWR 8x10
BWM-1113	DblHd 10°Ofs BxWR 11x013
BWM-1214	DblHd 10°Ofs BxWR 12x14
BWM-1415	DblHd 10°Ofs BxWR 14x15
BWM-1618	DblHd 10°Ofs BxWR 16x18
BWM-1719	DblHd 10°Ofs BxWR 17x19
BWM-1922	DblHd 10°Ofs BxWR 19x22
BWM-2124	DblHd 10°Ofs BxWR 21x24
BWM-2730	DblHd 10°Ofs BxWR 27x30
BWM-3032	DblHd 10°Ofs BxWR 30x32
C-10	Cd Chs 5 StSz 5/16
C-12	Cd Chs 5-1/4 StSz 5/16
C-16	Cd Chs 6 StSz 3/8
C-20	Cd Chs 6-1/2 StSz 1/2
C-24	Cd Chs 7 StSz 5/8
C-28	Cd Chs 7-1/2 StSz 3/8
C-32	Cd Chs 8 StSz 7/8
C-36	Cd Chs 8 StSz 7/8
C-715	RlBr 1/2 StSz 15-1/8
C-718	RlBr 5/8 StSz 18
C-8	Cd Chs 4-3/4 StSz 1/4
C-80A	Pch Bar 3/4 StSz 24
C-82A	Pch Bar 3/4 StSz 18
CC-404C	C-Cl Cpr Scr 4
CC-406C	C-Cl Cpr Scr 6
CW-4	Chain WR
EWM-0607	OE WRChrSat 6x 7mm
EWM-0708	OE WRChrSat 7x 8mm
EWM-1011	OE WRChrSat 10x 11mm
EWM-1213	OE WRChrSat 12x 13mm
EWM-1415	OE WRChrSat 14x 15mm
EWM-1618	OE WRChrSat 16x 18mm
EWM-1719	OE WRChrSat 17x 19mm
EWM-2124	OE WRChrSat 21x 24mm
EWM-2427	OE WRChrSat 24x 27mm
EWM-2730	OE WRChrSat 27x 30mm
Ex-21A	ExtrDrill Sz 1/8
Ex-21B	ExtrDrill Sz 3/16
Ex-22A	ExtrDrill Sz 7/32
Ex-24A	ExtrDrill Sz 5/16
Ex-25A	ExtrDrill Sz 15/32
Ex-25B	ExtrDrill Sz 3/8
Ex-26A	ExtrDrill Sz 9/16
Ex-28	ExtrDrill Sz 21/32
Ex-29	ExtrDrill Sz 13/16
GS-1	Master Feeler Gauge Set
GSC-12	Gasket Scr-8-3/4x1 1/2
H-104	3/4Dr Ext 3
H-110	3/4Dr Ext 8
H-115	3/4Dr Ext 16
H-1224	3/4Dr Skt12pt 3/4
H-1226	3/4Dr Skt12pt 13/16
H-1228	3/4Dr Skt12pt 7/8
H-1230	3/4Dr Skt12pt 15/16
H-1232	3/4Dr Skt12pt 1
H-1234	3/4Dr Skt12pt 1-1/16
H-1236	3/4Dr Skt12pt 1-1/8
H-1238	3/4Dr Skt12pt 1-3/16
H-1240	3/4Dr Skt12pt 1-1/4
H-1242	3/4Dr Skt12pt 1-5/16
H-1244	3/4Dr Skt12pt 1-3/8
H-1246	3/4Dr Skt12pt 1-7/16
H-1248	3/4Dr Skt12pt 1-1/2
H-1250	3/4Dr Skt12pt 1-9/16
H-1252	3/4Dr Skt12pt 1-5/8
H-1254	3/4Dr Skt12pt 1-11/16
H-1256	3/4Dr Skt12pt 1-3/4
H-1258	3/4Dr Skt12pt 1-13/16
H-1260	3/4Dr Skt12pt 1-7/8
H-1264	3/4Dr Skt12pt 2
H-1266	3/4Dr Skt12pt 2-1/16
H-1268	3/4Dr Skt12pt 2-1/8
H-1270	3/4Dr Skt12pt 2-3/16
H-1272	3/4Dr Skt12pt 2-1/4
H-1274	3/4Dr Skt12pt 2-5/16
H-1276	3/4Dr Skt12pt 2-3/8
H-140A	3/4Dr U-Joint
H-20A	3/4Dr Sliding T Hdle
H-41AA	3/4Dr FlHdl Chr22-1/8
H-51AB1	3/4Dr Ratchet 24-11/16
HD-628	3/4Dr Dp Skt6pt 7/8
HD-630	3/4Dr Dp Skt6pt 15/16
HD-632	3/4Dr Dp Skt6pt 1
HD-634	3/4Dr Dp Skt6pt 1-1/16
HD-636	3/4Dr Dp Skt6pt 1-1/8
HD-640	3/4Dr Dp Skt6pt 1-1/4
HD-642	3/4Dr Dp Skt6pt 1-5/16
HD-644	3/4Dr Dp Skt6pt 1-3/8
HD-646	3/4Dr Dp Skt6pt 1-7/16
HD-648	3/4Dr Dp Skt6pt 1-1/2
HD-652	3/4Dr Dp Skt6pt 1-5/8
HM-1219	3/4Dr Skt12pt 19mm
HM-1222	3/4Dr Skt12pt 22mm
HM-1224	3/4Dr Skt12pt 24mm
HM-1227	3/4Dr Skt12pt 27mm
HM-1230	3/4Dr Skt12pt 30mm
HM-1232	3/4Dr Skt12pt 32mm
HM-1235	3/4Dr Skt12pt 35mm
HM-1236	3/4Dr Skt12pt 36mm
HM-1238	3/4Dr Skt12pt 38mm
HM-1241	3/4Dr Skt12pt 41mm
HM-1246	3/4Dr Skt12pt 46mm
HM-1250	3/4Dr Skt12pt 50mm
HM-1254	3/4Dr Skt12pt 54mm
HM-1255	3/4Dr Skt12pt 55mm
HM-1260	3/4Dr Skt12pt 60mm
HNx-130	3/4Dr ADp 3/4 Fx1 M
HNx-131	3/4Dr ADp 3/4 Mx1 F
HSB-25	Brass Hmr 2-1/2 Lb
HSB-4	Brass Hmr 4 Lb
HSF-152A	Hmr Body 1-1/4 Lb 1-1/2
HSF-15N	Hmr Tip Med Hard 1-1/2
HSF-15S	Hmr Tip Soft 1-1/2
HSF-15xH	Hmr Tip Extra Hard1-1/2
JHW-16	Dead Blow Hmr16oz
JHW-32	Dead Blow Hmr32oz
M-102	1/4DrExt2
M-104	1/4DrExt4
M-106A	1/4DrSpinner Hdle
M-110	1/4DrExt 10
M-115	1/4DrExt6
M-140A	1/4DrU-Joint
M-15A	1/4DrSpeeder
M-20A	1/4DrSliding T Hdle
M-42A	1/4DrFlHdl
M-52EHA	1/4Dr EncHd Ratchet 5
M-605	Skt6pt 5/32
M-606	Skt6pt 3/16
M-607	Skt6pt 7/32
M-608	Skt6pt 1/4
M-609	Skt6pt 9/32
M-610	Skt6pt 5/16
M-611	Skt6pt 11/32
M-612	Skt6pt 3/8
M-614	Skt6pt 7/16
M-616	Skt6pt 1/2
M-618	Skt6pt 9/16
M-808	1/4Dr Skt 8-Pt 1/4
M-810	1/4Dr Skt 8-Pt 5/16
M-812	1/4Dr Skt 8-Pt 3/8
MA-10LA	1/4Dr Lg HexBtSkt 5/16
MA-3-1/2LA	1/4Dr Lg HexBtSkt 7/64
MA-3HBA	Bl HexBtSkt 3/32
MA-3LA	1/4Dr Lg HexBtSkt 3/32
MA-4 1/2HBA	Bl HexBtSkt 9/64
MA-4-1/2LA	1/4Dr Lg HexBtSkt 9/64
MA-4HBA	Bl HexBtSkt 1/8
MA-4LA	1/4Dr Lg HexBtSkt 1/8
MA-5HBA	Bl HexBtSkt 5/32
MA-5LA	1/4Dr Lg HexBtSkt 5/32
MA-6HBA	Bl HexBtSkt 3/16
MA-6LA	1/4Dr Lg HexBtSkt 3/16
MA-7HBA	Bl HexBtSkt 7/32
MA-7LA	1/4Dr Lg HexBtSkt 7/32
MA-8HBA	Bl HexBtSkt 1/4
MA-8LA	1/4Dr Lg HexBtSkt 1/4
MD-606	Dp Skt6pt 3/16
MD-607	Dp Skt6pt 7/32
MD-608	Dp Skt6pt 1/4
MD-609	Dp Skt6pt 9/32
MD-610	Dp Skt6pt 5/16
MD-611	Dp Skt6pt 11/32
MD-612	Dp Skt6pt 3/8
MD-614	Dp Skt6pt 7/16
MD-616	Dp Skt6pt 1/2
MD-618	Dp Skt6pt 9/16
MFE-6	1/4Dr Flible Ext 6
MM-604	Mm Skt6pt 4mm
MM-605	Mm Skt6pt 5mm
MM-6055	Mm Skt6pt 55mm
MM-606	Mm Skt6pt 6mm
MM-607	Mm Skt6pt 7mm
MM-608	Mm Skt6pt 8mm
MM-609	Mm Skt6pt 9mm
MM-610	Mm Skt6pt 10mm
MM-611	Mm Skt6pt 11mm
MM-612	Mm Skt6pt 12mm
MM-613	Mm Skt6pt 13mm
MM-614	Mm Skt6pt 14mm
MMD-604	Mm Dp Skt6pt 4mm
MMD-605	Mm Dp Skt6pt 5mm
MMD-6055	Mm Dp Skt6pt 55mm
MMD-606	Mm Dp Skt6pt 6mm
MMD-607	Mm Dp Skt6pt 7mm
MMD-608	Mm Dp Skt6pt 8mm
MMD-609	Mm Dp Skt6pt 9mm
MMD-610	Mm Dp Skt6pt10mm
MMD-611	Mm Dp Skt6pt 11mm
MMD-612	Mm Dp Skt6pt 12mm
MMD-613	Mm Dp Skt6pt 13mm
MMD-614	Mm Dp Skt6pt 14mm
MWS-27	Hex Key Set 11-pcs
MWS-47	Hex Key Set 7-pcs
O-471	Adj Pin Spr 3/4 To 2
O-472	Adj Pin Spr 1-1/4 To 3
OES-0607	Dbl Oe WR 3/16x7/32Sh
OES-0809	Dbl Oe WR 1/4x9/32Sh
OES-1011	Dbl Oe WR 5/16x11/32Sh
OES-1214	Dbl Oe WR 3/8x7/16Sh
OES-1618	Dbl Oe WR 1/2x9/16Sh
P-10	Pinpch 7 StSz 1/2
P-13	Sldpch 4-1/2 StSz 5/16
P-14	Sldpch 4-1/2 StSz 5/16
P-15	Sldpch 5 StSz 3/8
P-16	Sldpch 5 StSz 3/8
P-17	Sldpch 6 StSz 1/2
P-25	LgTprPch 8-1/2 StSz 1/2
P-26	LgTprPch 9 StSz 1/2
P-28	LgTprPch 11 StSz 5/8
P-3	Pinpch 4-3/4 StSz 5/16
P-30	Prickpch 5 StSz 3/8
P-4	Pinpch 5 StSz 5/16
P-40	Centerpch 5 StSz 3/8
P-42	Centerpch 6 StSz 1/2
P-5	Pinpch 5-1/4 StSz 5/16
P-6	Pinpch 5-1/2 StSz 5/16
P-8	Pinpch 7 StSz 3/8
PL-1515	Lck Rg Pls8
PL1519C	Superjoint Pls 5
PL-1600C	Snap Rg Pls & Tips Set
PL-529	Hvy Dty Snap Rg Pls Set
PL-533	Fixed Tip Ret Rg Pl-Ext
PL-534	Fixed Tip Ret Rg Pl-Ext
PLS-6A	General Service Pls Set
RB-1214	Rat Chr 6pt 3/8x7/16
RB-1618	Rat Chr 6pt 1/2x9/16
RB-2022	Rat Chr 12pt 5/8x11/16
RB-2428	Rat Chr 12pt 3/4x7/8
RB-42	Sg Rat WR 1-5/16
RB-44	Sg Rat WR 1-3/8
RB-46	Sg Rat WR 1-7/16
RB-48	Sg Rat WR 1-1/2
RB-50	Sg Rat WR 1-9/16
RB-52	Sg Rat WR 1-5/8
RB-54	Sg Rat WR 1-11/16
RB-56	Sg Rat WR 1-3/4
RB-58	Sg Rat WR 1-13/16
RB-60	Sg Rat WR 1-7/8
RB-64	Sg Rat WR2
RB-68	Sg Rat WR 2-1/8
RB-810	Rat Chr 6pt 1/4x5/16
RBM-0708	Mm RatBxWR 7x 8mm
RBM-0910	Mm RatBxWR 9x 10mm
RBM-1112	Mm RatBxWR 11x 12mm
RBM-1314	Mm RatBxWR 13x 14mm
RBM-1517	Mm RatBxWR 15x 17mm
RBM-22	RatBxWR 22mm
RBM-23	RatBxWR 23mm
RBM-24	RatBxWR 24mm
RBM-25	RatBxWR 25mm
RBM-26	RatBxWR 26mm
RBM-27	RatBxWR 27mm
RBM-29	RatBxWR 29mm
RBM-30	RatBxWR 30mm
RBM-32	RatBxWR 32mm
RBM-36	RatBxWR 36mm
RBO-1214	OfsRatWRChr12pt 3/8x7/16
RBO-1618	OfsRatWRChr12pt 1/2x9/16
RBO-2022	OfsRatWRChr12pt 5/8x11/16
RBO-2428	OfsRatWRChr12pt 3/4x7/8
RBO-810	OfsRatWRChr12pt 1/4x5/16
RFW-12	Rat FL NUT WR3/8
RFW-14	Rat FL NUT WR7/16
RFW-16	Rat FL NUT WR1/2
RFW-18	Rat FL NUT WR9/16
RFW-20	Rat FL NUT WR5/8
RFW-22	Rat FL NUT WR11/16
RFW-24	Rat FL NUT WR3/4
RFW-26	Rat FL NUT WR13/16
RFW-28	Rat FL NUT WR7/8
RFW-30	Rat FL NUT WR15/16
RFW-32	Rat FL NUT WR1
S-102P	1/2Dr Ext2
S-10A	1/2Dr Speeder 13-5/8
S-110P	1/2Dr Ext5
S-115P	1/2Dr Ext10
S-121P	1/2Dr Ext20
S-140A	1/2DrU-Joint
S-15A	1/2Dr Speeder 18-1/16
S-20A	1/2Dr Sliding T Hdle
S-40AA	1/2Dr FlHdl 10-7/16
S-41AA	1/2Dr FlHdl 15-1/2
S-52EH	1/2Dr EncHd Rat 10-3/8
S-52EHL	1/2Dr EncHd Rat 15
S-60D	1/2Dr Stud Remover
S-70	1/2Dr Ratchet Spinner
SA-10A	HexBtSkt 5/16
SA-10A-3P	1/2Dr Ph Skt 3-Pt
SA-10A-3S	1/2Dr SlBitSkt
SA-10LA	Lg HexBtSkt 5/16
SA-12A	HexBtSkt 3/8
SA-12A-4P	1/2Dr Ph Skt 4-Pt
SA-12A-4S	1/2Dr SlBitSkt
SA-12LA	Lg HexBtSkt 3/8
SA-16A	HexBtSkt 1/2
SA-16LA	Lg HexBtSkt 1/2
SA-18A	HexBtSkt 9/16
SA-18LA	Lg HexBtSkt 9/16
SA-20A	HexBtSkt 5/8
SA-20LA	Lg HexBtSkt 5/8
SA-8A	HexBtSkt 1/4
SA-8LA	Lg HexBtSkt 1/4
SB-30	1/2DrDragLnk Skt 1-1/2
SB-40	1/2DrDragLnk Skt 1-9/16
SB-40AA	1/2Dr FlHdl 10-13/16 Blk
SB-526	1/2Dr Penta-Skt
SH-130	1/2Dr ADp 1/2 Fx3/4 M
SMD-1213	Mm Dp Skt12pt 13mm
SMD-1214	Mm Dp Skt12pt 14mm
SMD-1215	Mm Dp Skt12pt 15mm
SMD-1216	Mm Dp Skt12pt 16mm
SMD-1217	Mm Dp Skt12pt 17mm
SMD-1218	Mm Dp Skt12pt 18mm
SMD-1219	Mm Dp Skt12pt 19mm
SMD-1221	Mm Dp Skt12pt 21mm
SMD-1222	Mm Dp Skt12pt 22mm
SMD-1224	Mm Dp Skt12pt 24mm
SMD-1227	Mm Dp Skt12pt 27mm
SMD-1230	Mm Dp Skt12pt 30mm
SS-20	SQ Shank Scr Sl 3
SS-24	SQ Shank Scr Sl 4
SS-26	SQ Shank Scr Sl 6
SS-28	SQ Shank Scr Sl 8
SS-33	SQ Shank Scr Sl 12
SS-62	SQ Shank Scr Sl Stby
ST-1212	1/2Dr Std12ptSkt 3/8
ST-1214	1/2Dr Std12ptSkt 7/16
ST-1216	1/2Dr Std12ptSkt 1/2
ST-1218	1/2Dr Std12ptSkt 9/16
ST-1219	1/2Dr Std12ptSkt 19/32
ST-1220	1/2Dr Std12ptSkt 5/8
ST-1221	1/2Dr Std12ptSkt 21/32
ST-1222	1/2Dr Std12ptSkt 11/16
ST-1224	1/2Dr Std12ptSkt 3/4
ST-1225	1/2Dr Std12ptSkt 25/32
ST-1226	1/2Dr Std12ptSkt 13/16
ST-1228	1/2Dr Std12ptSkt 7/8

Contents: Mammoth Set WSC-1390TB (con't)

Product Code	Description
ST-1230	1/2Dr Std12ptSkt 15/16
ST-1231	1/2Dr Std12ptSkt 31/32
ST-1232	1/2Dr Std12ptSkt 1
ST-1234	1/2Dr Std12ptSkt 1 1/16
ST-1236	1/2Dr Std12ptSkt 1 1/8
ST-1238	1/2Dr Std12ptSkt 1 3/16
ST-1240	1/2Dr Std12ptSkt 1 1/4
ST-1242	1/2Dr Std12ptSkt 1 5/16
ST-1244	1/2Dr Std12ptSkt 1 3/8
ST-1246	1/2Dr Std12ptSkt 1 7/16
ST-1248	1/2Dr Std12ptSkt 1 1/2
ST-812	1/2Dr Std8ptSkt 3/8
ST-814	1/2Dr Std8ptSkt 7/16
ST-816	1/2Dr Std8ptSkt 1/2
ST-818	1/2Dr Std8ptSkt 9/16
ST-820	1/2Dr Std8ptSkt 5/8
ST-822	1/2Dr Std8ptSkt 11/16
ST-824	1/2Dr Std8ptSkt 3/4
ST-826	1/2Dr Std8ptSkt 13/16
ST-828	1/2Dr Std8ptSkt 7/8
ST-830	1/2Dr Std8ptSkt 15/16
ST-832	1/2Dr Std8ptSkt 1
ST-834	1/2Dr Std8ptSkt 1 1/16
ST-836	1/2Dr Std8ptSkt 1 1/8
ST-840	1/2Dr Std8ptSkt 1 1/4
STM-1210	1/2Dr Skt12pt 10mm
STM-1211	1/2Dr Skt12pt 11mm
STM-1212	1/2Dr Skt12pt 12mm
STM-1213	1/2Dr Skt12pt 13mm
STM-1214	1/2Dr Skt12pt 14mm
STM-1215	1/2Dr Skt12pt 15mm
STM-1216	1/2Dr Skt12pt 16mm
STM-1217	1/2Dr Skt12pt 17mm
STM-1218	1/2Dr Skt12pt 18mm
STM-1219	1/2Dr Skt12pt 19mm
STM-1220	1/2Dr Skt12pt 20mm
STM-1221	1/2Dr Skt12pt 21mm
STM-1222	1/2Dr Skt12pt 22mm
STM-1223	1/2Dr Skt12pt 23mm
STM-1224	1/2Dr Skt12pt 24mm
STM-1225	1/2Dr Skt12pt 25mm
STM-1226	1/2Dr Skt12pt 26mm
STM-1227	1/2Dr Skt12pt 27mm
STM-1228	1/2Dr Skt12pt 28mm
STM-1229	1/2Dr Skt12pt 29mm
STM-1230	1/2Dr Skt12pt 30mm
STM-1232	1/2Dr Skt12pt 32mm
STM-1234	1/2Dr Skt12pt 34mm
STM-1236	1/2Dr Skt12pt 36mm
TS38375	TurboSkt SavSkt 3/8
TS38394	TurboSkt SavSkt 10mm
TS38437	TurboSkt SavSkt 7/16
TS38472	TurboSkt SavSkt 12mm
TS38500	TurboSkt SavSkt 1/2
TS38512	TurboSkt SavSkt 13mm
TS38551	TurboSkt SavSkt 14mm
TS38562	TurboSkt SavSkt 9/16
TS38591	TurboSkt SavSkt 15mm
TS38625	TurboSkt SavSkt 5/8
TS38669	TurboSkt SavSkt 17mm
TS38687	TurboSkt SavSkt 11/16
TS38750	TurboSkt SavSkt 3/4
W40RC7	40" Roll Cabinet
W40TC4	40 Top Chest
W53RC6BS	53 Roll Cabinet
W53TC8	53 Top Chest
WRS-1	Rat Scr
WRST1	T Hdle Rat Scr Stby
WS-44	Hex Key Set 13-pcs
WS-45	Hex Key Set 8-pcs
WSM-11TRC	1/4Dr HexBtSkt Set 10-pc
WSM-4TRC	1/4Dr HexBtSkt Set 4-pc
WTC-11	Wire Twister/Ctr 8-1/2

Contents: Mammoth Set Fractional WSC-1390SAE

Refer to Master Set Section for Photo and Description

Product Code	Description
1002MFRMH	3/8Dr Cl Trq Wr 100 F-Lb
1020	OE WR 1/4x5/16
1033C	OE WR 15/16x1
1037	OE WR 1-1/16x1-1/4
1037B	OE WR1-1/8x1-3/16
10600	DblHd FL WR 3/8x7/16
10602	DblHd FL WR 1/2x9/16
10604	DblHd FL WR 5/8x11/16
10606	DblHd FL WR 3/4x7/8
1-100-04-3-2	4 Hd SM File w/PlHdl
1-100-08-1-2	8 Hd BST File w/Hdle
1-100-08-2-2	8 Hd 2ND File w/Hdle
1-111-04-3-2	4 WRD SM File w/PlHdl
1112	Min OE WRChrSat 3/16
1113	Min OE WRChrSat 13/64
1114	Min OE WRChrSat 7/32
1115	Min OE WRChrSat 15/64
1116	Min OE WRChrSat 1/4
1118	Min OE WRChrSat 9/32
1120	Min OE WRChrSat 5/16
1122	Min OE WRChrSat 11/32
1124	Min OE WRChrSat 3/8
1128	Min OE WRChrSat 7/16
11312	Stby Comb WR 3/8
11314	Stby Comb WR 7/16
11316	Stby Comb WR 1/2
11318	Stby Comb WR 9/16
1132	Min OE WRChrSat 1/2
11320	Stby Comb WR 5/8
11322	Stby Comb WR 11/16
11324	Stby Comb WR 3/4
1136	Min OE WRChrSat 9/16
1140	Min OE WRChrSat 5/8
1-160-04-3-2	4 SQ SM File w/PlHdl
1-160-08-1-2	8 SQ BST File w/Hdle
1-170-04-3-2	4 3 SQ SM File w/PlHdl
1180	WRChrSat12pt 1 5/8
1182	WRChrSat12pt 1 11/16
1184	WRChrSat12pt 1 3/4
1186	WRChrSat12pt 1 13/16
1188	WRChrSat12pt 1 7/8
1190	WRChrSat12pt 2
11900	Fl Hd Comb WR 3/8
11901	Fl Hd Comb WR 7/16
11902	Fl Hd Comb WR 1/2
11903	Fl Hd Comb WR 9/16
11904	Fl Hd Comb WR 5/8
11905	Fl Hd Comb WR 11/16
11906	Fl Hd Comb WR 3/4
1191	WRChrSat12pt 2 1/16
1192	WRChrSat12pt 2 1/8
1193	WRChrSat12pt 2 3/16
1194	WRChrSat12pt 2 1/4
1195	WRChrSat12pt 2 3/8
11952	Ofs Comb WR 3/8
11953	Ofs Comb WR 7/16
11954	Ofs Comb WR 1/2
11955	Ofs Comb WR 9/16
11956	Ofs Comb WR 5/8
11957	Ofs Comb WR 11/16
11958	Ofs Comb WR 3/4
11959	Ofs Comb WR 13/16
11960	Ofs Comb WR 7/8
1197	WRChrSat12pt 2 1/2
1206MRC	6mm Rat Comb WR
1208RC	1/4 Rat Comb WR
1-210-04-3-2	4 1/2RD SM File w/PlHdl
1-210-08-1-2	8 1/2RD BST File w/Hdle
1210RC	Rev Rat Comb WR 5/16
1210RCF	Fl-Hd Rat Comb WR 5/16
1210RCS	Stby Rat Comb WR 5/16
1210SC	WRChrSat12pt 5/16
1212RC	Rev Rat Comb WR 3/8
1212RCF	Fl-Hd Rat Comb WR 3/8
1212RCS	Stby Rat Comb WR 3/8
1212SC	WRChrSat12pt 3/8
1214RC	Rev Rat Comb WR 7/16
1214RCF	Fl-Hd Rat Comb WR 7/16
1214RCS	Stby Rat Comb WR 7/16
1214SC	WRChrSat12pt 7/16
1216RC	Rev Rat Comb WR 1/2
1216RCF	Fl-Hd Rat Comb WR 1/2
1216RCS	Stby Rat Comb WR 1/2
1216SC	WRChrSat12pt 1/2
1218RC	Rev Rat Comb WR 9/16
1218RCF	Fl-Hd Rat Comb WR 9/16
1218RCS	Stby Rat Comb WR 9/16
1218SC	WRChrSat12pt 9/16
1220RC	Rev Rat Comb WR 5/8
1220RCF	Fl-Hd Rat Comb WR 5/8
1220RCS	Stby Rat Comb WR 5/8
1220SC	WRChrSat12pt 5/8
1222RC	Rev Rat Comb WR 11/16
1222RCF	Fl-Hd Rat Comb WR 11/16
1222RCS	Stby Rat Comb WR 11/16
1222SC	WRChrSat12pt 11/16
1224RC	Rev Rat Comb WR 3/4
1224RCF	Fl-Hd Rat Comb WR 3/4
1224RCS	Stby Rat Comb WR 3/4
1224SC	WRChrSat12pt 3/4
1224TSB	Str Bx Tub WR-3/4
1226RC	Rev Rat Comb WR 13/16
1226SC	WRChrSat12pt 13/16
1226TSB	Str Bx Tub WR-13/16
1228RC	Rev Rat Comb WR 7/8
1228SC	WRChrSat12pt 7/8
1228TSB	Str Bx Tub WR-7/8
1-230-04-3-2	4 RD SM File w/PlHdl
1-230-08-1-2	8 RD BST File w/Hdle
1230RC	Rev Rat Comb WR 15/16
1230SC	WRChrSat12pt 15/16
1230TSB	Str Bx Tub WR-15/16
1232RC	Rev Rat Comb WR 1
1232SC	WRChrSat12pt 1
1232TOE	OE Tub WR-1
1232TSB	Str Bx Tub WR-1
1234SC	WRChrSat12pt 1-1/16
1234TOE	OE Tub WR-1-1/16
1234TSB	Str Bx Tub WR-1-1/16
1236SC	WRChrSat12pt 1-1/8
1236TOB	Off Bx Tub Wr-1-1/8
1236TOE	OE Tub WR-1-1/8
1236TSB	Str Bx Tub WR-1-1/8
1240SC	WRChrSat12pt 1-1/4
1242	WRChrSat12pt 1-5/16
1244	WRChrSat12pt 1 3/8
1246	WRChrSat12pt 1 7/16
1248	WRChrSat12pt 1 1/2
12601	Dbl Fl Hd WR 3/8x7/16
12603	Dbl Fl Hd WR 1/2x9/16
12605	Dbl Fl Hd WR 5/8x11/16
12607	Dbl Fl Hd WR 3/4x7/8
12-610	3/8Dr DplmSkt6pt 5/16
12-612	3/8Dr DplmSkt6pt 3/8
12-614	3/8Dr DplmSkt6pt 7/16
12-616	3/8Dr DplmSkt6pt 1/2
12-618	3/8Dr DplmSkt6pt 9/16
12-620	3/8Dr DplmSkt6pt 5/8
12-622	3/8Dr DplmSkt6pt 11/16
12-624	3/8Dr DplmSkt6pt 3/4
12-626	3/8Dr DplmSkt6pt 13/16
12-628	3/8Dr DplmSkt6pt 7/8
12-630	3/8Dr DplmSkt6pt 15/16
12-632	3/8Dr DplmSkt6pt 1
13406	Chr Adj WRes 6
13408	Chr Adj WRes 8
13410	Chr Adj WRes 10
13412	Chr Adj WRes 12
13418	18 Chr Adj WR Pol Hd
13518	Cast Iron Pipe WR 8
13522	Cast Iron Pipe WR 12
13526	Cast Iron Pipe WR 18
13609	Bl End Hex KeyLgMet13-pc
13625	15 Const Adj WR
14-612	1/2Dr DplmSkt6pt 3/8
14-614	1/2Dr DplmSkt6pt 7/16
14-616	1/2Dr DplmSkt6pt 1/2
14-618	1/2Dr DplmSkt6pt 9/16
14-620	1/2Dr DplmSkt6pt 5/8
14-622	1/2Dr DplmSkt6pt11/16
14-624	1/2Dr DplmSkt6pt 3/4
14-626	1/2Dr DplmSkt6pt13/16
14-628	1/2Dr DplmSkt6pt 7/8
14-630	1/2Dr DplmSkt6pt15/16
14-632	1/2Dr DplmSkt6pt 1
14-634	1/2Dr DplmSkt6pt 1-1/16
14-636	1/2Dr DplmSkt6pt 1-1/8
14-638	1/2Dr DplmSkt6pt 1-3/16
14-640	1/2Dr DplmSkt6pt 1-1/4
14-642	1/2Dr DplmSkt6pt 1-5/16
14-644	1/2Dr DplmSkt6pt 1-3/8
14-646	1/2Dr DplmSkt6pt 1-7/16
14-648	1/2Dr DplmSkt6pt 1-1/2
16-624	3/4Dr DplmSkt6pt 3/4
16-626	3/4Dr DplmSkt6pt13/16
16-628	DplmSkt6pt 7/8
16-630	DplmSkt6pt 15/16
16-632	DplmSkt6pt 1
16-634	DplmSkt6pt 1 1/16
16-636	DplmSkt6pt 1 1/8
16-640	DplmSkt6pt 1 1/4
16-642	DplmSkt6pt 1 5/16
16-644	3/4Dr DplmSkt6pt 1-3/8
16-646	3/4Dr DplmSkt6pt 1-7/16
16-648	DplmSkt6pt 1 1/2
16-650	3/4Dr DplmSkt6pt 1-9/16
16-652	3/4Dr DplmSkt6pt 1-5/8
16-654	3/4Dr DplmSkt6pt 1-11/16
16-656	3/4Dr DplmSkt6pt 1-3/4
16-658	3/4Dr DplmSkt6pt 1-13/16
16-660	3/4Dr DplmSkt6pt 1-7/8
16-664	3/4Dr DplmSkt6pt 2
1723	OE WRench 3/8x7/16
1725	OE WR 7/16x1/2
1725B	OE WR 1/2x9/16
1727	OE WR 9/16x5/8
1729B	OE WR 11/16x3/4
1731B	OE WR 13/16x7/8
2-02B	3/8Dr Im Ext 3
20401	20oz FG Crv Claw Hmr
20544	16oz Bl PN FG Hdle Hmr
20545	24oz Bl PN FG Hdle Hmr
20651	48oz CrPN FG LgHdl Hmr
20678	32ozDrilling FG Hdle Hmr
208	Mini Hksw Alum Hdle 10
2-103A	3/8Dr Im Ext 3
2-106A	3/8Dr Im Ext 6
2-140B	3/8Dr Im U-Joint
21661	2pc PryBarBmdHdl 8&18
2203-8	Diagonal Cutting Plier Straight ergo® 8"
222D	Alligator Pl 6
223D	Alligator Pl 7-1/2
224D	Alligator Pl 9-1/2
23101	6-1/4 Sl Jt Pl
23103	9-3/4 Sl Jt Pl
23107	15-3/4 Gr Jt Pl 9 Pos
23201	CrvJaw w/Ctr LckPl 5
23202	CrvJaw w/Ctr LckPl 7
23203	CrvJaw w/Ctr LckPl 10
23301	CrvJaw wire Ctr LckPl 5
23302	CrvJaw wire Ctr LckPl 7
23305	Str Jaw LckPl 10
23310	Lg Ns wire Ctr LckPls 9
23320	Lck C-Cl LckPl 6
23403	8" Linesman Plier
23406	6-1/4" Heavy Duty Diagonal Cutting
23409	6-1/4" Bent Nose
23410	6-1/4" Long Nose
23411	8" Long Nose
23503	FrEnd Strip-Cut/Crimper
23506	Heavy Duty Stripper/Ctr
23512	Romex Tl Dual Type
23530	Coax Cable Tl
23535	Cg Super Stripper 20-30
23541	Elec Mini-Ctr 5-1/2
23542	Elec Mini-Stripper 5-1/2
23543	Elec Mini-Crimper 5-1/2
23603	9 Lnms Dipped Hdles
23801	Conv Ret Rg Pl Cap 2
23803	Conv Ret Rg Pl Cap 1
24201	Cab Scr 1/8x4
24205	Sl Scr 3/16x4
24207	Cab Scr 3/16x3

Contents: Mammoth Set Fractional WSC-1390SAE (con't)

Product Code	Description
24211	Cab Scr 3/16x6
24213	Cab Scr 3/16x10
24217	Sl Scr 1/4x1 1/2
24219	Sl Scr 1/4x4
24237	Sl Scr 5/16x6
24239	5/16x8 Rd Sl Bmd Hdle
24241	Sl Scr 3/8x8
24243	3/8x12 Rd Sl Bmd Hdle
24249	Ph Scr # 1x3
24251	Ph Scr # 2x1 1/2
24253	Ph Scr # 2x4
24259	#3x6 Ph Bmd Hdle
24263	Torx Scr T10x4
24265	Torx Scr T15x4
24267	Torx Scr T20x4
24269	Torx Scr T25x4
24271	Torx Scr T27x4
24273	Torx Scr T30x4
24401	3/16 Csh Gr Ntdrv
24403	1/4 Csh Gr Ntdrv
24405	5/16 Csh Gr Ntdrv
24407	11/32 Csh Gr Ntdrv
2-4A	3/8Dr Im Adp3/8Fx1/2M
24TH	Tub WR Hdle-24
2503MFRMH	1/2Dr Cl Trq WR 250 F-Lb
2-608	3/8Dr ImSkt6pt 1/4
2-610	3/8Dr ImSkt6pt 5/16
2-612	3/8Dr ImSkt6pt 3/8
2-614	3/8Dr ImSkt6pt 7/16
2-616	3/8Dr ImSkt6pt 1/2
2-618	3/8Dr ImSkt6pt 9/16
2-620	3/8Dr ImSkt6pt 5/8
2-622	3/8Dr ImSkt6pt 11/1
2-624	3/8Dr ImSkt6pt 3/4
2-626	3/8Dr ImSkt6pt 13/1
2-628	3/8Dr ImSkt6pt 7/8
2628 G-180	Side Cutting Combination Plier ergo® 7"
2-630	3/8Dr ImSkt6pt 15/1
2-632	3/8Dr ImSkt6pt 1
2653-9	Lnms's Pl Cmf Gr 9 -1/2
28201	Av Snips Left
28203	Av Snips Right
28205	Av Snips Str
28301	Str Pat Tin Snips 7
28307	Str Pat Tin Snips 12
28449	Pch & Chs Holder
30009	1/4 Fx3/8 M Adapter
300-14-F15/16-HP	TIBx Saw Pl14 15TPI
31008	3/8 Fx1/4 M Adapter
31009	3/8 Fx1/2 M Adapter
31301	3/8Dr SpkPl Skt 5/8
31303	3/8Dr SpkPl Skt 13/16
32008	1/2 Fx3/8 M Adapter
32412	1/2Dr Skt 3/8
32414	1/2Dr Skt 7/16
32416	1/2Dr Skt 1/2
32418	1/2Dr Skt 9/16
32420	1/2Dr Skt 5/8
32422	1/2Dr Skt 11/16
32424	1/2Dr Skt 3/4
32426	1/2Dr Skt 13/16
32428	1/2Dr Skt 7/8
32430	1/2Dr Skt 15/16
32432	1/2Dr Skt 1
32434	1/2Dr Skt 1 1/16
32436	1/2Dr Skt 1 1/8
32438	1/2Dr Skt 1 3/16
32440	1/2Dr Skt 1 1/4
32448	1/2Dr Skt 1 1/2
325	Prof Hksw Hdle 12
33008	3/4F*1/2MAdapter
35040	1/4Dr ScrBt Skt Sl 5/32
35041	1/4Dr ScrBt Skt Sl 7/32
35042	1/4Dr ScrBt Skt Sl 9/32
35050	1/4Dr ScrBt Skt Ph # 0
35051	1/4Dr ScrBt Skt Ph # 1
35052	1/4Dr ScrBt Skt Ph # 2
35080	1/4Dr Torx Bit Skt T10
35081	1/4Dr Torx Bit Skt T15
35082	1/4Dr Torx Bit Skt T20
35083	1/4Dr Torx Bit Skt T25
35084	1/4Dr Torx Bit Skt T27
35085	1/4Dr Torx Bit Skt T30
35182	3/8Dr Torx Bit Skt T25
35183	3/8Dr Torx Bit Skt T27
35184	3/8Dr Torx Bit Skt T30
35185	3/8Dr Torx Bit Skt T40
35186	3/8Dr Torx Bit Skt T45
35187	3/8Dr Torx Bit Skt T47
35188	3/8Dr Torx Bit Skt T50
35192	3/8Dr Torx Bit Skt T25
35193	3/8Dr Torx Bit Skt T27
35194	3/8Dr Torx Bit Skt T30
35195	3/8Dr Torx Bit Skt T40
35196	3/8Dr Torx Bit Skt T45
35197	3/8Dr Torx Bit Skt T47
35198	3/8Dr Torx Bit Skt T50
36TH	Tub WR Hdle-36
3816-300	Tung Carbide Hksw Bl 12
38216	3/4Dr Hex ImSkt 1/2
38218	3/4Dr Hex ImSkt 9/16
38220	3/4Dr Hex ImSkt 5/8
38224	3/4Dr Hex ImSkt 3/4
38226	3/4Dr Hex ImSkt 13/16
38228	3/4Dr Hex ImSkt 7/8
38232	3/4Dr Hex ImSkt 1
38238	3/4Dr Hex ImSkt 1 1/8
38240	3/4Dr Hex ImSkt 1 1/4
3840-100-10-SC-1P	BiRecipBL 4 10TPI
3840-100-18-SC-1P	BiRecipBL 4 18TPI
3840-100-24-ST-1P	BiRecipBL 4 24TPI U-Thg
3840-100-6-ST-1P	BiRecipBL 4 6TPI U-Thg
3840-150-10-ST-1P	BiRecipBL 6 10TPI U-Thg
3840-150-14-ST-1P	BiRecipBL 6 14TPI U-Thg
3840-150-18-ST-1P	BiRecipBL 6 18TPI U-Thg
3840-150-24-ST-1P	BiRecipBL 6 24TPI U-Thg
3840-150-5/8-SL-1P	BiRecipBL 6 5/8TPI
3840-150-7-SL-1P	BiRecipBL 6 7TPI
396-LAP	Fldg Saw Bmd 8 7TPI
40000	1/4x6 GsktScpr BmdHdl
40052	QckBl AutoUtKnife 5pk025
40058	Fldg Ut Knife
40072	QckBl DispBulk100pk 025
40150	Tel Pick-Up Tl BmdHdl
40201	4pc Minipick/hookBmdHdl
40221	12 Strap WR
40251	4pc Ut Tl Set BmdHdl
40639	1/2Dr Im Adp1/2 Fx3/4
40701	3/4Dr Im Adp 3/4 Fx1
4-102	1/2Dr Im Ext 3-1/2
4-105A	1/2Dr Im Ext 5
4-110A	1/2Dr Im Ext10
4-140B	1/2Dr Im U-Joint
42302	Std Seat Creeper
4-2A	1/2Dr Im Adp1/2 Fx3/8
43605	Tube Ctr 1-1/8
43618	Pl Hose Ctr
4559-24	Bolt Ctr Cmf Grs 24
4-612	1/2Dr ImSkt6pt 3/8
4-614	1/2Dr ImSkt6pt7/16
4-616	1/2Dr ImSkt6pt1/2
4-618	1/2Dr ImSkt6pt9/16
4-620	1/2Dr ImSkt6pt5/8
4-622	1/2Dr ImSkt6pt11/16
4-624	1/2Dr ImSkt6pt3/4
4-626	1/2Dr ImSkt6pt13/16
4-628	1/2Dr ImSkt6pt7/8
4-630	1/2Dr ImSkt6pt15/16
4-632	1/2Dr ImSkt6pt1
4-634	1/2Dr ImSkt6pt1-1/16
4-636	1/2Dr ImSkt6pt1-1/8
4-638	1/2Dr ImSkt6pt1-3/16
4-640	1/2Dr ImSkt6pt1-1/4
4-642	1/2Dr ImSkt6pt1-5/16
4-644	1/2Dr ImSkt6pt1-3/8
4-646	1/2Dr ImSkt6pt1-7/16
4-648	1/2Dr ImSkt6pt1-1/2
471	Adj Hk Spr 3/4 To 2
472	Adj Hk Spr 1-1/4 To 3
474	Adj Hk Spr 2 To 4-3/4
6004MFRMH	3/4Dr Cl Trq WR 600 F-Lb
6-107	3/4Dr Im Ext 7
6-110	3/4Dr Im Ext 9-3/4
6-113	3/4Dr Im Ext 12-3/4
6-140B	3/4Dr Im U-Joint
6-1x	Ret Rg
625	Scrp1 TripleW/Hol
625-DROP	Drop-Shape Bl625 Scrp
625-PEAR	Pear-Shape Bl625 Scrp
625-RD	RD Bl625 Scrp
6-4A	3/4Dr ImAdp 3/4 Fx1/2M
6-618A	3/4Dr ImSkt6pt 9/16
6-620A	3/4Dr ImSkt6pt 5/8
6-622A	3/4Dr ImSkt6pt 11/16
6-624A	Std ImSkt6pt 3/4
6-626A	Std ImSkt6pt 13/16
6-628A	Std ImSkt6pt 7/8
6-630A	Std ImSkt6pt 15/16
6-632A	Std ImSkt6pt 1
6-634A	Std ImSkt6pt 1 1/16
6-636	Std ImSkt6pt 1 1/8
6-640	Std ImSkt6pt 1 1/4
6-642	Std ImSkt6pt 1 5/16
6-644	Std ImSkt6pt 1 3/8
6-646	Std ImSkt6pt 1 7/16
6-648	Std ImSkt6pt 1 1/2
665	Scrp2-1/2 Dbl Bl
6-652	Std ImSkt6pt 1 5/8
6-654	3/4Dr ImSkt6pt1-11/16
6-656	3/4Dr ImSkt6pt 1-3/4
6-658	3/4Dr ImSkt6pt1-13/16
6-660	3/4Dr ImSkt6pt 1-7/8
6-662	3/4Dr ImSkt6pt1-15/16
6-664	3/4Dr ImSkt6pt2
6-666	3/4Dr ImSkt6pt2-1/16
6-670	3/4Dr ImSkt6pt2-3/16
6-672	3/4Dr ImSkt6pt2-1/4
6-676	3/4Dr ImSkt6pt2-3/8
7029B	BxWRChrSat12pt 11/16x3/4
7033C	BxWRChrSat12pt 15/16x1
7723	BxWRChrSat12pt 3/8x7/16
7725B	BxWRChrSat12pt 1/2x9/16
7727A	BxWRChrSat12pt 5/8x11/16
7731A	BxWRChrSat12pt 3/4x7/8
7731B	BxWRChrSat12pt 13/16x7/8
808050S-22	Ratcheting Scr Set
8223	Adj Joint Pls 8
8225	Adj Joint Pls 12
860114	Bi Hksw Bl 12 18TPI 10P
860124	Bi Hksw Bl 12 24TPI 10P
862017	Prof Holesaw Set 17pc
87079	10 Ton Manmaster Gear Set
9031RUS	Blkx-Wide Adj WR 8
9070RPUS	Blk Adj/Pipe WR 6
9072RPUS	Blk Adj/Pipe WR 10
9-12-51/3806-KP	Bws w/Bws & Hack Bl
9-467-00-0-0	File Cleaner
B-101	3/8Dr Ext 1 1/2
B-108	3/8Dr Ext 3
B-110	3/8Dr Ext 6
B-115	3/8Dr Ext 11
B-118	3/8Dr Ext 18
B-1208	Skt12pt 1/4
B-1210	Skt12pt 5/16
B-1212	Skt12pt 3/8
B-1214	Skt12pt 7/16
B-1216	Skt12pt 1/2
B-1218	Skt12pt 9/16
B-1220	Skt12pt 5/8
B-1222	Skt12pt 11/16
B-1224	Skt12pt 3/4
B-1226	Skt12pt 13/16
B-1228	Skt12pt 7/8
B-1230	Skt12pt 15/16
B-1232	Skt12pt 1
B-140A	3/8Dr U-Joint
B-15	3/8Dr Speeder
B-20A	3/8Dr Sliding T Hdle
B-40A	3/8Dr FlHdl
B-52EHA	3/8Dr EncHd Rat 8
B-52EHLA	3/8Dr EncHd Rat 10-3/4
B-70	Chr Ratchet Spinner
BA-10A	Sh HexBtSkt 5/16
BA-10A-3P	3/8Dr Ph Skt 3-Pt
BA-10A-3S	3/8Dr SlSkt 9/32x045
BA-10A-4S	3/8Dr SlSkt 5/16x055
BA-10HBA	Bl HexBtSkt 5/16
BA-10LA	Lg HexBtSkt 5/16
BA-12A	Sh HexBtSkt 3/8
BA-12A-4P	3/8Dr Ph Skt 4-Pt
BA-12HBA	Bl HexBtSkt 3/8
BA-12LA	Lg HexBtSkt 3/8
BA-4A	Sh HexBtSkt 1/8
BA-4HBA	Bl HexBtSkt 1/8
BA-4LA	Lg HexBtSkt 1/8
BA-5A	Sh HexBtSkt 5/32
BA-5A-1S	3/8Dr SlSkt 3/16x032
BA-5HBA	Bl HexBtSkt 5/32
BA-5LA	Lg HexBtSkt 5/32
BA-6A	Sh HexBtSkt 3/16
BA-6HBA	Bl HexBtSkt 3/16
BA-6LA	Lg HexBtSkt 3/16
BA-7A	Sh HexBtSkt 7/32
BA-7A-1P	3/8Dr Ph Skt 1-Pt
BA-7A-2P	3/8Dr Ph Skt 2-Pt
BA-7A-2S	3/8Dr SlSkt 7/32x040
BA-7HBA	Bl HexBtSkt 7/32
BA-7LA	Lg HexBtSkt 7/32
BA-8A	Sh HexBtSkt 1/4
BA-8HBA	Bl HexBtSkt 1/4
BA-8LA	Lg HexBtSkt 1/4
BB-526	3/8Dr Penta-Skt
BD-1208	Dp Skt12pt 1/4
BD-1210	Dp Skt12pt 5/16
BD-1212	Dp Skt12pt 3/8
BD-1214	Dp Skt12pt 7/16
BD-1216	Dp Skt12pt 1/2
BD-1218	Dp Skt12pt 9/16
BD-1220	Dp Skt12pt 5/8
BD-1222	Dp Skt12pt 11/16
BD-1224	Dp Skt12pt 3/4
BD-1226	Dp Skt12pt 13/16
BD-1228	Dp Skt12pt 7/8
BD-1230	Dp Skt12pt 15/16
BD-1232	Dp Skt12pt 1
BD-808	3/8Dr Skt 8-Pt 1/4
BD-810	3/8Dr Skt 8-Pt 5/16
BD-812	3/8Dr Skt 8-Pt 3/8
BD-814	3/8Dr Skt 8-Pt 7/16
BD-816	3/8Dr Skt 8-Pt 1/2
BD-818	3/8Dr Skt 8-Pt 9/16
BD-820	3/8Dr Skt 8-Pt 5/8
BFE-8	3/8Dr Flible Ext 8
BHMD-30	3/8Dr Hd ImpDrr
BS-05B	3/8Dr Adp1/2 Fx3/8 M Blk
BS-12B	3/8Dr Adp1/2 Fx3/8 M Blk
BU-1212	U-Skt12pt 3/8
BU-1214	U-Skt12pt 7/16
BU-1216	U-Skt12pt 1/2
BU-1218	U-Skt12pt 9/16
BU-1220	U-Skt12pt 5/8
BU-1222	U-Skt12pt 11/16
BU-1224	U-Skt12pt 3/4
BWM-0810	DblHd 10°Ofs BxWR 8x10
BWM-1113	DblHd 10°Ofs BxWR 11x013
BWM-1214	DblHd 10°Ofs BxWR 12x14
BWM-1415	DblHd 10°Ofs BxWR 14x15
BWM-1618	DblHd 10°Ofs BxWR 16x18
BWM-1719	DblHd 10°Ofs BxWR 17x19
BWM-1922	DblHd 10°Ofs BxWR 19x22
BWM-2124	DblHd 10°Ofs BxWR 21x24
BWM-2730	DblHd 10°Ofs BxWR 27x30
BWM-3032	DblHd 10°Ofs BxWR 30x32
C-10	Cd Chs 5 StSz 5/16
C-12	Cd Chs 5-1/4 StSz 5/16
C-16	Cd Chs 6 StSz 3/8
C-20	Cd Chs 6-1/2 StSz 1/2
C-24	Cd Chs 7 StSz 5/8
C-28	Cd Chs 7-1/2 StSz 3/8
C-32	Cd Chs 8 StSz 7/8
C-36	Cd Chs 8 StSz 7/8
C-715	RlBr 1/2 StSz 15-1/8
C-718	RlBr 5/8 StSz 18
C-8	Cd Chs 4-3/4 StSz 1/4
C-80A	Pch Bar 3/4 StSz 24
C-82A	Pch Bar 3/4 StSz 18
CC-404C	C-Cl Cpr Scr 4
CC-406C	C-Cl Cpr Scr 6
CW-4	Chain WR
Ex-21A	ExtrDrill Sz 1/8
Ex-21B	ExtrDrill Sz 3/16
Ex-22A	ExtrDrill Sz 7/32
Ex-24A	ExtrDrill Sz 5/16
Ex-25A	ExtrDrill Sz 15/32
Ex-25B	ExtrDrill Sz 3/8
Ex-26A	ExtrDrill Sz 9/16
Ex-28	ExtrDrill Sz 21/32
Ex-29	ExtrDrill Sz 13/16
GS-1	Master Feeler Gauge Set
GSC-12	GsktScpr-8-3/4x1 1/2
H-104	3/4Dr Ext 3
H-110	3/4Dr Ext 8
H-115	3/4Dr Ext 16
H-1224	3/4Dr Skt12pt 3/4
H-1226	3/4Dr Skt12pt 13/16
H-1228	3/4Dr Skt12pt 7/8
H-1230	3/4Dr Skt12pt 15/16
H-1232	3/4Dr Skt12pt 1
H-1234	3/4Dr Skt12pt 1-1/16
H-1236	3/4Dr Skt12pt 1-1/8
H-1238	3/4Dr Skt12pt 1-3/16
H-1240	3/4Dr Skt12pt 1-1/4
H-1242	3/4Dr Skt12pt 1-5/16
H-1244	3/4Dr Skt12pt 1-3/8
H-1246	3/4Dr Skt12pt 1-7/16
H-1248	3/4Dr Skt12pt 1-1/2
H-1250	3/4Dr Skt12pt 1-9/16
H-1252	3/4Dr Skt12pt 1-5/8
H-1254	3/4Dr Skt12pt 1-11/16
H-1256	3/4Dr Skt12pt 1-3/4
H-1258	3/4Dr Skt12pt 1-13/16
H-1260	3/4Dr Skt12pt 1-7/8
H-1264	3/4Dr Skt12pt 2
H-1266	3/4Dr Skt12pt 2-1/16
H-1268	3/4Dr Skt12pt 2-1/8
H-1270	3/4Dr Skt12pt 2-3/16
H-1272	3/4Dr Skt12pt 2-1/4
H-1274	3/4Dr Skt12pt 2-5/16
H-1276	3/4Dr Skt12pt 2-3/8

Contents: Mammoth Set Fractional WSC-1390SAE (con't)

Product Code	Description
H-140A	3/4Dr U-Joint
H-20A	3/4Dr Sliding T Hdle
H-41AA	3/4Dr FlHdl Chr22-1/8
H-51AB1	3/4Dr Ratchet 24-11/16
HD-628	3/4Dr Dp Skt6pt 7/8
HD-630	3/4Dr Dp Skt6pt 15/16
HD-632	3/4Dr Dp Skt6pt 1
HD-634	3/4Dr Dp Skt6pt 1-1/16
HD-636	3/4Dr Dp Skt6pt 1-1/8
HD-640	3/4Dr Dp Skt6pt 1-1/4
HD-642	3/4Dr Dp Skt6pt 1-5/16
HD-644	3/4Dr Dp Skt6pt 1-3/8
HD-646	3/4Dr Dp Skt6pt 1-7/16
HD-648	3/4Dr Dp Skt6pt 1-1/2
HD-652	3/4Dr Dp Skt6pt 1-5/8
HNx-130	3/4Dr ADp 3/4 Fx1 M
HNx-131	3/4Dr ADp 3/4 Mx1 F
HSB-25	Brass Hmr 2-1/2 Lb
HSB-4	Brass Hmr 4 Lb
HSF-152A	Hmr Body 1-1/4 Lb 1-1/2
HSF-15N	Hmr Tip Med Hard 1-1/2
HSF-15S	Hmr Tip Soft 1-1/2
HSF-15xH	Hmr Tip Extra Hard1-1/2
JHW-16	Dead Blow Hmr16oz
JHW-32	Dead Blow Hmr32oz
M-102	1/4DrExt2
M-104	1/4DrExt4
M-106A	1/4DrSpinner Hdle
M-110	1/4DrExt 10
M-115	1/4DrExt6
M-140A	1/4DrU-Joint
M-15A	1/4DrSpeeder
M-20A	1/4DrSliding T Hdle
M-42A	1/4DrFlHdl
M-52EHA	1/4Dr EncHd Ratchet 5
M-605	Skt6pt 5/32
M-606	Skt6pt 3/16
M-607	Skt6pt 7/32
M-608	Skt6pt 1/4
M-609	Skt6pt 9/32
M-610	Skt6pt 5/16
M-611	Skt6pt 11/32
M-612	Skt6pt 3/8
M-614	Skt6pt 7/16
M-616	Skt6pt 1/2
M-618	Skt6pt 9/16
M-808	1/4Dr Skt 8-Pt 1/4
M-810	1/4Dr Skt 8-Pt 5/16
M-812	1/4Dr Skt 8-Pt 3/8
MA-10LA	1/4Dr Lg HexBtSkt 5/16
MA-3-1/2LA	1/4Dr Lg HexBtSkt 7/64
MA-3HBA	Bl HexBtSkt 3/32
MA-3LA	1/4Dr Lg HexBtSkt 3/32
MA-4 1/2HBA	Bl HexBtSkt 9/64
MA-4-1/2LA	1/4Dr Lg HexBtSkt 9/64
MA-4HBA	Bl HexBtSkt 1/8
MA-4LA	1/4Dr Lg HexBtSkt 1/8
MA-5HBA	Bl HexBtSkt 5/32
MA-5LA	1/4Dr Lg HexBtSkt 5/32
MA-6HBA	Bl HexBtSkt 3/16
MA-6LA	1/4Dr Lg HexBtSkt 3/16
MA-7HBA	Bl HexBtSkt 7/32
MA-7LA	1/4Dr Lg HexBtSkt 7/32
MA-8HBA	Bl HexBtSkt 1/4
MA-8LA	1/4Dr Lg HexBtSkt 1/4
MD-606	Dp Skt6pt 3/16
MD-607	Dp Skt6pt 7/32
MD-608	Dp Skt6pt 1/4
MD-609	Dp Skt6pt 9/32
MD-610	Dp Skt6pt 5/16
MD-611	Dp Skt6pt 11/32
MD-612	Dp Skt6pt 3/8
MD-614	Dp Skt6pt 7/16
MD-616	Dp Skt6pt 1/2
MD-618	Dp Skt6pt 9/16
MFE-6	1/4Dr Flible Ext 6
O-471	Adj Pin Spr 3/4 To 2
O-472	Adj Pin Spr 1-1/4 To 3
OES-0607	Dbl Oe WR 3/16x7/32Sh
OES-0809	Dbl Oe WR 1/4x9/32Sh
OES-1011	Dbl Oe WR 5/16x11/32Sh
OES-1214	Dbl Oe WR 3/8x7/16Sh
OES-1618	Dbl Oe WR 1/2x9/16Sh
P-10	Pinpch 7 StSz 1/2
P-13	Sldpch 4-1/2 StSz 5/16
P-14	Sldpch 4-1/2 StSz 5/16
P-15	Sldpch 5 StSz 3/8
P-16	Sldpch 5 StSz 3/8
P-17	Sldpch 6 StSz 1/2
P-25	LgTprPch 8-1/2 StSz 1/2
P-26	LgTprPch 9 StSz 1/2
P-28	LgTprPch 11 StSz 5/8
P-3	Pinpch 4-3/4 StSz 5/16
P-30	Prickpch 5 StSz 3/8
P-4	Pinpch 5 StSz 5/16
P-40	Centerpch 5 StSz 3/8
P-42	Centerpch 6 StSz 1/2
P-5	Pinpch 5-1/4 StSz 5/16
P-6	Pinpch 5-1/2 StSz 5/16
P-8	Pinpch 7 StSz 3/8
PL-1515	Lck Rg Pls8
PL1519C	Superjoint Pls 5
PL-1600C	Snap Rg Pls & Tips Set
PL-529	Hvy Dty Snap Rg Pls Set
PL-533	Fixed Tip Ret Rg Pl-Ext
PL-534	Fixed Tip Ret Rg Pl-Ext
PLS-6A	General Service Pls Set
RB-1214	Rat Chr 6pt 3/8x7/16
RB-1618	Rat Chr 6pt 1/2x9/16
RB-2022	Rat Chr 12pt 5/8x11/16
RB-2428	Rat Chr 12pt 3/4x7/8
RB-42	Sg Rat WR 1-5/16
RB-44	Sg Rat WR 1-3/8
RB-46	Sg Rat WR 1-7/16
RB-48	Sg Rat WR 1-1/2
RB-50	Sg Rat WR 1-9/16
RB-52	Sg Rat WR 1-5/8
RB-54	Sg Rat WR 1-11/16
RB-56	Sg Rat WR 1-3/4
RB-58	Sg Rat WR 1-13/16
RB-60	Sg Rat WR 1-7/8
RB-64	Sg Rat WR2
RB-68	Sg Rat WR 2-1/8
RB-810	Rat Chr 6pt 1/4x5/16
RBO-1214	OfsRatBxWR12pt 3/8x7/16
RBO-1618	OfsRatBxWR12pt 1/2x9/16
RBO-2022	OfsRatBxWR12pt 5/8x11/16
RBO-2428	OfsRatBxWR12pt 3/4x7/8
RBO-810	OfsRatBxWR12pt 1/4x5/16
RFW-12	Rat FL NUT WR3/8
RFW-14	Rat FL NUT WR7/16
RFW-16	Rat FL NUT WR1/2
RFW-18	Rat FL NUT WR9/16
RFW-20	Rat FL NUT WR5/8
RFW-22	Rat FL NUT WR11/16
RFW-24	Rat FL NUT WR3/4
RFW-26	Rat FL NUT WR13/16
RFW-28	Rat FL NUT WR7/8
RFW-30	Rat FL NUT WR15/16
RFW-32	Rat FL NUT WR1
S-102P	1/2Dr Ext2
S-10A	1/2Dr Speeder 13-5/8
S-110P	1/2Dr Ext5
S-115P	1/2Dr Ext10
S-121P	1/2Dr Ext20
S-140A	1/2DrU-Joint
S-15A	1/2Dr Speeder 18-1/16
S-20A	1/2Dr Sliding T Hdle
S-40AA	1/2Dr FlHdl 10-7/16
S-41AA	1/2Dr FlHdl 15-1/2
S-52EH	1/2Dr EncHd Rat 10-3/8
S-52EHL	1/2Dr EncHd Rat 15
S-60D	1/2Dr Stud Remover
S-70	1/2Dr Ratchet Spinner
SA-10A	HexBtSkt 5/16
SA-10A-3P	1/2Dr Ph Skt 3-Pt
SA-10A-3S	1/2Dr SlBitSkt
SA-10LA	Lg HexBtSkt 5/16
SA-12A	HexBtSkt 3/8
SA-12A-4P	1/2Dr Ph Skt 4-Pt
SA-12A-4S	1/2Dr SlBitSkt
SA-12LA	Lg HexBtSkt 3/8
SA-16A	HexBtSkt 1/2
SA-16LA	Lg HexBtSkt 1/2
SA-18A	HexBtSkt 9/16
SA-18LA	Lg HexBtSkt 9/16
SA-20A	HexBtSkt 5/8
SA-20LA	Lg HexBtSkt 5/8
SA-8A	HexBtSkt 1/4
SA-8LA	Lg HexBtSkt 1/4
SB-30	1/2DrDragLnk Skt 1-1/2
SB-40	1/2DrDragLnk Skt 1-9/16
SB-40AA	1/2Dr FlHdl 10-13/16 Blk
SB-526	1/2Dr Penta-Skt
SH-130	1/2Dr ADp 1/2 Fx3/4 M
SS-20	SQ Shank Scr Sl 3
SS-24	SQ Shank Scr Sl 4
SS-26	SQ Shank Scr Sl 6
SS-28	SQ Shank Scr Sl 8
SS-33	SQ Shank Scr Sl 12
SS-62	SQ Shank Scr Sl Stby
ST-1212	1/2Dr Std12ptSkt 3/8
ST-1214	1/2Dr Std12ptSkt 7/16
ST-1216	1/2Dr Std12ptSkt 1/2
ST-1218	1/2Dr Std12ptSkt 9/16
ST-1219	1/2Dr Std12ptSkt 19/32
ST-1220	1/2Dr Std12ptSkt 5/8
ST-1221	1/2Dr Std12ptSkt 21/32
ST-1222	1/2Dr Std12ptSkt 11/16
ST-1224	1/2Dr Std12ptSkt 3/4
ST-1225	1/2Dr Std12ptSkt 25/32
ST-1226	1/2Dr Std12ptSkt 13/16
ST-1228	1/2Dr Std12ptSkt 7/8
ST-1230	1/2Dr Std12ptSkt 15/16
ST-1231	1/2Dr Std12ptSkt 31/32
ST-1232	1/2Dr Std12ptSkt 1
ST-1234	1/2Dr Std12ptSkt 1 1/16
ST-1236	1/2Dr Std12ptSkt 1 1/8
ST-1238	1/2Dr Std12ptSkt 1 3/16
ST-1240	1/2Dr Std12ptSkt 1 1/4
ST-1242	1/2Dr Std12ptSkt 1 5/16
ST-1244	1/2Dr Std12ptSkt 1 3/8
ST-1246	1/2Dr Std12ptSkt 1 7/16
ST-1248	1/2Dr Std12ptSkt 1 1/2
ST-812	1/2Dr Std8ptSkt 3/8
ST-814	1/2Dr Std8ptSkt 7/16
ST-816	1/2Dr Std8ptSkt 1/2
ST-818	1/2Dr Std8ptSkt 9/16
ST-820	1/2Dr Std8ptSkt 5/8
ST-822	1/2Dr Std8ptSkt 11/16
ST-824	1/2Dr Std8ptSkt 3/4
ST-826	1/2Dr Std8ptSkt 13/16
ST-828	1/2Dr Std8ptSkt 7/8
ST-830	1/2Dr Std8ptSkt 15/16
ST-832	1/2Dr Std8ptSkt 1
ST-834	1/2Dr Std8ptSkt 1 1/16
ST-836	1/2Dr Std8ptSkt 1 1/8
ST-840	1/2Dr Std8ptSkt 1 1/4
TS38375	TurboSkt SavSkt 3/8
TS38437	TurboSkt SavSkt 7/16
TS38500	TurboSkt SavSkt 1/2
TS38562	TurboSkt SavSkt 9/16
TS38625	TurboSkt SavSkt 5/8
TS38687	TurboSkt SavSkt 11/16
TS38750	TurboSkt SavSkt 3/4
WRS-1	Rat Scr
WRST1	T Hdle Rat Scr Stby
WSM-11TRC	1/4Dr HexBtSkt Set 10-pc
WSM-4TRC	1/4Dr HexBtSkt Set 4-pc
WTC-11	Wire Twister/Ctr 8-1/2

Contents: Mammoth Set Metric WSC-1390MM

Refer to Master Set Section for Photo and Description

Product Code	Description
1002MFRMH	3/8Dr Cl Trq Wr 100 F-Lb
10111	Hex Key Set Sh 11-pc
10213	Hex Key Set Lg 13-pc
10650	FL NUT WR 9x 11mm
10652	FL NUT WR 10x 12mm
10654	FL NUT WR 13x 14mm
10656	FL NUT WR 15x 17mm
10658	FL NUT WR 19x 21mm
1-100-04-3-2	4 Hd SM File w/PlHdl
1-100-08-1-2	8 Hd BST File w/Hdle
1-100-08-2-2	8 Hd 2ND File w/Hdle
1-111-04-3-2	4 WRD SM File w/PlHdl
1-160-04-3-2	4 SQ SM File w/PlHdl
1-160-08-1-2	8 SQ BST File w/Hdle
1-170-04-3-2	4 3 SQ SM File w/PlHdl
11710	Stby Comb WR 10mm
11712	Stby Comb WR 12mm
11713	Stby Comb WR 13mm
11714	Stby Comb WR 14mm
11715	Stby Comb WR 15mm
11717	Stby Comb WR 17mm
11718	Stby Comb WR 18mm
1206MRC	6mm Rat Comb WR
1207MSC	WRChrSat12pt 7mm
1208MRC	Rev Rat Comb WR 8mm
1208MRCF	Fl Hd Rat Comb WR 8mm
1208MRCS	Stby Rat Comb WR 8mm
1208MSC	WRChrSat12pt 8mm
1208RC	1/4 Rat Comb WR
1209MRC	Rev Rat Comb WR 9mm
1209MRCF	Fl Hd Rat Comb WR 9mm
1209MRCS	Stby Rat Comb WR 9mm
1209MSC	WRChrSat12pt 9mm
1-210-04-3-2	4 1/2RD SM File w/PlHdl
1-210-08-1-2	8 1/2RD BST File w/Hdle
1210MRC	Rev Rat Comb WR 10mm
1210MRCF	Fl Hd Rat Comb WR 10mm
1210MRCS	Stby Rat Comb WR 10mm
1210MSC	WRChrSat12pt 10mm
1211MRC	Rev Rat Comb WR 11mm
1211MRCF	Fl Hd Rat Comb WR 11mm
1211MRCS	Stby Rat Comb WR 11mm
1211MSC	WRChrSat12pt 11mm
1212MRC	Rev Rat Comb WR 12mm
1212MRCF	Fl Hd Rat Comb WR 12mm
1212MRCS	Stby Rat Comb WR 12mm
1212MSC	WRChrSat12pt 12mm
1213MRC	Rev Rat Comb WR 13mm
1213MRCF	Fl Hd Rat Comb WR 13mm
1213MRCS	Stby Rat Comb WR 13mm
1213MSC	WRChrSat12pt 13mm
1214MRC	Rev Rat Comb WR 14mm
1214MRCF	Fl Hd Rat Comb WR 14mm
1214MRCS	Stby Rat Comb WR 14mm
1214MSC	WRChrSat12pt 14mm
1215MRC	Rev Rat Comb WR 15mm
1215MRCF	Fl Hd Rat Comb WR 15mm
1215MRCS	Stby Rat Comb WR 15mm
1215MSC	WRChrSat12pt 15mm
1216MRC	Rev Rat Comb WR 16mm
1216MRCF	Fl Hd Rat Comb WR 16mm
1216MRCS	Stby Rat Comb WR 16mm
1217MRC	Rev Rat Comb WR 17mm
1217MRCF	Fl Hd Rat Comb WR 17mm
1217MRCS	Stby Rat Comb WR 17mm
1217MSC	WRChrSat12pt 17mm
1218MRC	Rev Rat Comb WR 18mm
1218MRCF	Fl Hd Rat Comb WR 18mm
1218MRCS	Stby Rat Comb WR 18mm
1218MSC	WRChrSat12pt 18mm
1219MRC	Rev Rat Comb WR 19mm
1219MRCF	Fl Hd Rat Comb WR 19mm
1219MRCS	Stby Rat Comb WR 19mm
1219MSC	WRChrSat12pt 19mm
1221MRC	Rev Rat Comb WR 21mm
1221MSC	WRChrSat12pt 21mm
1222MRC	Rev Rat Comb WR 22mm
1222MSC	WRChrSat12pt 22mm
1224MRC	Rev Rat Comb WR 24mm
1224MSC	WRChrSat12pt 24mm
1225MRC	Rev Rat Comb WR 25mm
1227MSC	WRChrSat12pt 27mm
1-230-04-3-2	4 RD SM File w/PlHdl
1-230-08-1-2	8 RD BST File w/Hdle
1230MSC	WRChrSat12pt 30mm
1232MSC	WRChrSat12pt 32mm
1234MSC	WRChrSat12pt 34mm
1236MSC	WRChrSat12pt 36mm
1240TOB	Off Bx Tub WR-1-1/4-32mm
1240TOE	OE Tub WR-1-1/4-32mm

Contents: Mammoth Set Metric WSC-1390MM (con't)

Product Code	Description
1240TSB	Str Bx Tub WR-1-1/4-32mm
1242TOB	Off Bx Tub WR-1-5/16-33mm
1242TOE	OE Tub WR-1-5/16-33mm
1244TOE	OE Tub WR-1-3/8-35mm
1246TOE	OE Tub WR-1-7/16-36mm
1248TOB	Off Bx Tub WR-1-1/2-38mm
1248TOE	OE Tub WR-1-1/2-38mm
1252TOB	Off Bx Tub WR-1-5/8-41mm
1256TOB	Off Bx Tub WR-1-3/4-44mm
12M-607	3/8Dr DpImSkt6pt 7mm
12M-608	3/8Dr DpImSkt6pt 8mm
12M-609	3/8Dr DpImSkt6pt 9mm
12M-610	3/8Dr DpImSkt6pt 10mm
12M-611	3/8Dr DpImSkt6pt 11mm
12M-612	3/8Dr DpImSkt6pt 12mm
12M-613	3/8Dr DpImSkt6pt 13mm
12M-614	3/8Dr DpImSkt6pt 14mm
12M-615	3/8Dr DpImSkt6pt 15mm
12M-616	3/8Dr DpImSkt6pt 16mm
12M-617	3/8Dr DpImSkt6pt 17mm
12M-618	3/8Dr DpImSkt6pt 18mm
12M-619	3/8Dr DpImSkt6pt 19mm
12M-620	3/8Dr DpImSkt6pt 20mm
12M-621	3/8Dr DpImSkt6pt 21mm
12M-622	3/8Dr DpImSkt6pt 22mm
12M-623	3/8Dr DpImSkt6pt 23mm
12M-624	3/8Dr DpImSkt6pt 24mm
13213	Bl End Hex Key Lg 13-pc
14M-610	1/2Dr DpImSkt6pt 10mm
14M-611	1/2Dr DpImSkt6pt 11mm
14M-612	1/2Dr DpImSkt6pt 12mm
14M-613	1/2Dr DpImSkt6pt 13mm
14M-614	1/2Dr DpImSkt6pt 14mm
14M-615	1/2Dr DpImSkt6pt 15mm
14M-616	1/2Dr DpImSkt6pt 16mm
14M-617	1/2Dr DpImSkt6pt 17mm
14M-618	1/2Dr DpImSkt6pt 18mm
14M-619	1/2Dr DpImSkt6pt 19mm
14M-620	1/2Dr DpImSkt6pt 20mm
14M-621	1/2Dr DpImSkt6pt 21mm
14M-622	1/2Dr DpImSkt6pt 22mm
14M-623	1/2Dr DpImSkt6pt 23mm
14M-624	1/2Dr DpImSkt6pt 24mm
14M-625	1/2Dr DpImSkt6pt 25mm
14M-626	1/2Dr DpImSkt6pt 26mm
14M-627	1/2Dr DpImSkt6pt 27mm
14M-629	1/2Dr DpImSkt6pt 29mm
14M-630	1/2Dr DpImSkt6pt 30mm
14M-632	1/2Dr DpImSkt6pt 32mm
14M-634	1/2Dr DpImSkt6pt 34mm
14M-635	1/2Dr DpImSkt6pt 35mm
14M-636	1/2Dr DpImSkt6pt 36mm
2-02B	3/8Dr Im Ext 3
20401	20oz FG Crv Claw Hmr
20544	16oz Bl PN FG Hdle Hmr
20545	24oz Bl PN FG Hdle Hmr
20651	48oz CrPN FG Hdle Hmr
20678	32ozDrilling FG Hdle Hmr
208	Mini Hksw Alum Hdle 10
2-103A	3/8Dr Im Ext 3
2-106A	3/8Dr Im Ext 6
2-140B	3/8Dr Im U-Joint
21661	2pc PryBar BmdHdl 8&18
2203-8	Diagonal Cutting Plier Straight ergo® 8"
222D	Alligator Pl 6
223D	Alligator Pl 7-1/2
224D	Alligator Pl 9-1/2
23101	6-1/4 Sl Jt Pl
23103	9-3/4 Sl Jt Pl
23107	15-3/4 Gr Jt Pl 9 Pos
23201	CrvJaw w/Ctr LckPl 5
23202	CrvJaw w/Ctr LckPl 7
23203	CrvJaw w/Ctr LckPl 10
23301	CrvJaw wire Ctr LckPl 5
23302	CrvJaw wire Ctr LckPl 7
23305	Str Jaw LckPl 10
23310	Lg Ns wire Ctr LckPls 9
23320	Lck C-Cl LckPl 6
23403	8" Linesman Plier
23406	6-1/4" Heavy Duty Diagonal Cutting
23409	6-1/4" Bent Nose
23410	6-1/4" Long Nose
23411	8" Long Nose
23503	FrEnd Strip-Cut/Crimper
23506	Heavy Duty Stripper/Ctr
23512	Romex Tl Dual Type
23530	Coax Cable Tl
23535	Cg Super Stripper 20-30
23541	Elec Mini-Ctr 5-1/2
23542	Elec Mini-Stripper 5-1/2
23543	Elec Mini-Crimper 5-1/2
23603	9 Lnms Dipped Hdles
23801	Conv Ret Rg Pl Cap 2
23803	Conv Ret Rg Pl Cap 1
24201	Cab Scr 1/8x4
24205	Sl Scr 3/16x4
24207	Cab Scr 3/16x3
24211	Cab Scr 3/16x6
24213	Cab Scr 3/16x10
24217	Sl Scr 1/4x1 1/2
24219	Sl Scr 1/4x4
24237	Sl Scr 5/16x6
24239	5/16x8 Rd Sl Bmd Hdle
24241	Sl Scr 3/8x8
24243	3/8x12 Rd Sl Bmd Hdle
24249	Ph Scr # 1x3
24251	Ph Scr # 2x1 1/2
24253	Ph Scr # 2x4
24259	#3x6 Ph Bmd Hdle
24263	Torx Scr T10x4
24265	Torx Scr T15x4
24267	Torx Scr T20x4
24269	Torx Scr T25x4
24271	Torx Scr T27x4
24273	Torx Scr T30x4
24401	3/16 Csh Gr Ntdrv
24403	1/4 Csh Gr Ntdrv
24405	5/16 Csh Gr Ntdrv
24407	11/32 Csh Gr Ntdrv
2-4A	3/8Dr Im Adp3/8Fx1/2M
24TH	Tub WR Hdle-24
2503MFRMH	1/2Dr Cl Trq WR 250 F-Lb
2628 G-180	Side Cutting Combination Plier ergo® 7"
2653-9	Lnms's Pl Cmf Gr 9 -1/2
28201	Av Snips Left
28203	Av Snips Right
28205	Av Snips Str
28301	Str Pat Tin Snips 7
28307	Str Pat Tin Snips 12
28449	Pch & Chs Holder
2M-607	Std ImSkt6pt 7mm
2M-608	Std ImSkt6pt 8mm
2M-609	Std ImSkt6pt 9mm
2M-610	Std ImSkt6pt 10mm
2M-611	Std ImSkt6pt 11mm
2M-612	Std ImSkt6pt 12mm
2M-613	Std ImSkt6pt 13mm
2M-614	Std ImSkt6pt 14mm
2M-615	Std ImSkt6pt 15mm
2M-616	Std ImSkt6pt 16mm
2M-617	Std ImSkt6pt 17mm
2M-618	Std ImSkt6pt 18mm
2M-619	Std ImSkt6pt 19mm
30009	1/4 Fx3/8 M Adapter
300-14-F15/16-HP	TlBx Saw Pl14 15TPI
31008	3/8 Fx1/4 M Adapter
31009	3/8 Fx1/2 M Adapter
325	Prof Hksw Hdle 12
35040	1/4Dr ScrBt Skt Sl 5/32
35041	1/4Dr ScrBt Skt Sl 7/32
35042	1/4Dr ScrBt Skt Sl 9/32
35050	1/4Dr ScrBt Skt Ph # 0
35051	1/4Dr ScrBt Skt Ph # 1
35052	1/4Dr ScrBt Skt Ph # 2
35080	1/4Dr Torx Bit Skt T10
35081	1/4Dr Torx Bit Skt T15
35082	1/4Dr Torx Bit Skt T20
35083	1/4Dr Torx Bit Skt T25
35084	1/4Dr Torx Bit Skt T27
35085	1/4Dr Torx Bit Skt T30
35182	3/8Dr Torx Bit Skt T25
35183	3/8Dr Torx Bit Skt T27
35184	3/8Dr Torx Bit Skt T30
35185	3/8Dr Torx Bit Skt T40
35186	3/8Dr Torx Bit Skt T45
35187	3/8Dr Torx Bit Skt T47
35188	3/8Dr Torx Bit Skt T50
35192	3/8Dr Torx Bit Skt T25
35193	3/8Dr Torx Bit Skt T27
35194	3/8Dr Torx Bit Skt T30
35195	3/8Dr Torx Bit Skt T40
35196	3/8Dr Torx Bit Skt T45
35197	3/8Dr Torx Bit Skt T47
35198	3/8Dr Torx Bit Skt T50
36TH	Tub WR Hdle-36
3816-300	Tung Carbide Hksw Bl 12
3840-100-10-SC-1P	BiRecipBL 4 10TPI
3840-100-18-SC-1P	BiRecipBL 4 18TPI
3840-100-24-ST-1P	BiRecipBL 4 24TPI U-Thg
3840-100-6-ST-1P	BiRecipBL 4 6TPI U-Thg
3840-150-10-ST-1P	BiRecipBL 6 10TPI U-Thg
3840-150-14-ST-1P	BiRecipBL 6 14TPI U-Thg
3840-150-18-ST-1P	BiRecipBL 6 18TPI U-Thg
3840-150-24-ST-1P	BiRecipBL 6 24TPI U-Thg
3840-150-5/8-SL-1P	BiRecipBL 6 5/8TPI
3840-150-7-SL-1P	BiRecipBL 6 7TPI
396-LAP	Fldg Saw Bmd 8 7TPI
40000	1/4x6 GsktScpr BmdHdl
40052	QckBl AutoUtKnife5pk 025
40058	Fldg Ut Knife
40072	QckBl DispBulk 100pk 025
40150	Tel Pick-Up Tl BmdHdl
40201	4pc MiniPick/Hook BmdHdl
40221	12 Strap WR
40251	4pc Ut Tl Set BmdHdl
40639	1/2Dr Im Adp1/2 Fx3/4
40701	3/4Dr Im Adp 3/4 Fx1
4-102	1/2Dr Im Ext 3-1/2
4-105A	1/2Dr Im Ext 5
4-110A	1/2Dr Im Ext10
4-140B	1/2Dr Im U-Joint
42302	Std Seat Creeper
4-2A	1/2Dr Im Adp1/2 Fx3/8
43605	Tube Ctr 1-1/8
43618	Pl Hose Ctr
4559-24	Bolt Ctr Cmf Grs 24
471	Adj Hk Spr 3/4 To 2
472	Adj Hk Spr 1-1/4 To 3
474	Adj Hk Spr 2 To 4-3/4
4M-610	1/2Dr ImSkt6pt 10mm
4M-611	1/2Dr ImSkt6pt 11mm
4M-612	1/2Dr ImSkt6pt 12mm
4M-613	1/2Dr ImSkt6pt 13mm
4M-614	1/2Dr ImSkt6pt 14mm
4M-615	1/2Dr ImSkt6pt 15mm
4M-616	1/2Dr ImSkt6pt 16mm
4M-617	1/2Dr ImSkt6pt 17mm
4M-618	1/2Dr ImSkt6pt 18mm
4M-619	1/2Dr ImSkt6pt 19mm
4M-620	1/2Dr ImSkt6pt 20mm
4M-621	1/2Dr ImSkt6pt 21mm
4M-622	1/2Dr ImSkt6pt 22mm
4M-623	1/2Dr ImSkt6pt 23mm
4M-624	1/2Dr ImSkt6pt 24mm
4M-625	1/2Dr ImSkt6pt 25mm
4M-626	1/2Dr ImSkt6pt 26mm
4M-627	1/2Dr ImSkt6pt 27mm
4M-629	1/2Dr ImSkt6pt 29mm
4M-630	1/2Dr ImSkt6pt 30mm
4M-632	1/2DrImSkt6pt 32m
4M-634	1/2Dr ImSkt6pt 34mm
4M-636	1/2Dr ImSkt6pt 36mm
6004MFRMH	3/4Dr Cl Trq WR 600 F-Lb
6-107	3/4Dr Im Ext 7
6-110	3/4Dr Im Ext 9-3/4
6-113	3/4Dr Im Ext 12-3/4
6-140B	3/4Dr Im U-Joint
6-1x	Ret Rg
625	Scrp1 TripleW/Hol
625-DROP	Drop-Shape Bl625 Scrp
625-PEAR	Pear-Shape Bl625 Scrp
625-RD	RD Bl625 Scrp
6-4A	3/4Dr ImAdp 3/4 Fx1/2M
665	Scrp2-1/2 Dbl Bl
8223	Adj Joint Pls 8
8225	Adj Joint Pls 12
860114	Bi Hksw Bl 12 18TPI 10P
860124	Bi Hksw Bl 12 24TPI 10P
862017	Prof Holesaw Set 17pc
87032	Stud Rem/Inst Set
87079	10 Ton Manmaster Gear Set
9031RUS	Blkx-Wide Adj WR 8
9070RPUS	Blk Adj/Pipe WR 6
9072RPUS	Blk Adj/Pipe WR 10
9-12-51/3806-KP	Bws w/Bws & Hack Bl
9-467-00-0-0	File Cleaner
B-101	3/8Dr Ext 1 1/2
B-108	3/8Dr Ext 3
B-110	3/8Dr Ext 6
B-115	3/8Dr Ext 11
B-118	3/8Dr Ext 18
B-140A	3/8Dr U-Joint
B-15	3/8Dr Speeder
B-20A	3/8Dr Sliding T Hdle
B-40A	3/8Dr FlHdl
B-52EHA	3/8Dr EncHd Rat 8
B-52EHLA	3/8Dr EncHd Rat 10-3/4
B-70	Chr Ratchet Spinner
BB-526	3/8Dr Penta-Skt
BFE-8	3/8Dr Flible Ext 8
BHMD-30	3/8Dr Hd ImpDrr
BM-1206	3/8Dr Std12pt Skt 6mm
BM-1207	3/8Dr Std12pt Skt 7mm
BM-1208	3/8Dr Std12pt Skt 8mm
BM-1209	3/8Dr Std12pt Skt 9mm
BM-1210	3/8Dr Std12pt Skt 10mm
BM-1211	3/8Dr Std12pt Skt 11mm
BM-1212	3/8Dr Std12pt Skt 12mm
BM-1213	3/8Dr Std12pt Skt 13mm
BM-1214	3/8Dr Std12pt Skt 14mm
BM-1215	3/8Dr Std12pt Skt 15mm
BM-1216	3/8Dr Std12pt Skt 16mm
BM-1217	3/8Dr Std12pt Skt 17mm
BM-1218	3/8Dr Std12pt Skt 18mm
BM-1219	3/8Dr Std12pt Skt 19mm
BM-1220	3/8Dr Std12pt Skt 20mm
BM-1221	3/8Dr Std12pt Skt 21mm
BM-1222	3/8Dr Std12pt Skt 22mm
BM-1223	3/8Dr Std12pt Skt 23mm
BM-1224	3/8Dr Std12pt Skt 24mm
BM-1226	3/8Dr Std12pt Skt 26mm
BMD-606	3/8Dr Dp 6 PT Skt 6mm
BMD-607	3/8Dr Dp 6 PT Skt 7mm
BMD-608	3/8Dr Dp 6 PT Skt 8mm
BMD-609	3/8Dr Dp 6 PT Skt 9mm
BMD-610	3/8Dr Dp 6 PT Skt 10mm
BMD-611	3/8Dr Dp 6 PT Skt 11mm
BMD-612	3/8Dr Dp 6 PT Skt 12mm
BMD-613	3/8Dr Dp 6 PT Skt 13mm
BMD-614	3/8Dr Dp 6 PT Skt 14mm
BMD-615	3/8Dr Dp 6 PT Skt 15mm
BMD-616	3/8Dr Dp 6 PT Skt 16mm
BMD-617	3/8Dr Dp 6 PT Skt 17mm
BMD-618	3/8Dr Dp 6 PT Skt 8mm
BMD-619	3/8Dr Dp 6 PT Skt 19mm
BMD-620	3/8Dr Dp 6 PT Skt 20mm
BMD-622	3/8Dr Dp 6 PT Skt 22mm
BMD-623	3/8Dr Dp 6 PT Skt 23mm
BMD-624	3/8Dr Dp 6 PT Skt 24mm
BMD-625	3/8Dr Dp 6 PT Skt 25mm
BS-05B	3/8Dr Adp1/2 Fx3/8 M Blk
BS-12B	3/8Dr Adp1/2 Fx3/8 M Blk
BWM-0810	DblHd 10°Ofs BxWR 8x10
BWM-1113	DblHd 10°Ofs BxWR 11x013
BWM-1214	DblHd 10°Ofs BxWR 12x14
BWM-1415	DblHd 10°Ofs BxWR 14x15
BWM-1618	DblHd 10°Ofs BxWR 16x18
BWM-1719	DblHd 10°Ofs BxWR 17x19
BWM-1922	DblHd 10°Ofs BxWR 19x22
BWM-2124	DblHd 10°Ofs BxWR 21x24
BWM-2730	DblHd 10°Ofs BxWR 27x30
BWM-3032	DblHd 10°Ofs BxWR 30x32
C-10	Cd Chs 5 StSz 5/16
C-12	Cd Chs 5-1/4 StSz 5/16
C-16	Cd Chs 6 StSz 3/8
C-20	Cd Chs 6-1/2 StSz 1/2
C-24	Cd Chs 7 StSz 5/8
C-28	Cd Chs 7-1/2 StSz 3/8
C-32	Cd Chs 8 StSz 7/8
C-36	Cd Chs 8 StSz 7/8
C-715	RlBr 1/2 StSz 15-1/8
C-718	RlBr 5/8 StSz 18
C-8	Cd Chs 4-3/4 StSz 1/4
C-80A	Pch Bar 3/4 StSz 24
C-82A	Pch Bar 3/4 StSz 18
CC-404C	C-Cl Cpr Scr 4
CC-406C	C-Cl Cpr Scr 6
CW-4	Chain WR
EWM-0607	OE WRChrSat 6x 7mm
EWM-0708	OE WRChrSat 7x 8mm
EWM-1011	OE WRChrSat 10x 11mm
EWM-1213	OE WRChrSat 12x 13mm
EWM-1415	OE WRChrSat 14x 15mm
EWM-1618	OE WRChrSat 16x 18mm
EWM-1719	OE WRChrSat 17x 19mm
EWM-2124	OE WRChrSat 21x 24mm
EWM-2427	OE WRChrSat 24x 27mm
EWM-2730	OE WRChrSat 27x 30mm
GS-1	Master Feeler Gauge Set
GSC-12	GsktScpr-8-3/4x1 1/2
H-104	3/4Dr Ext 3
H-110	3/4Dr Ext 8
H-115	3/4Dr Ext 16
H-140A	3/4Dr U-Joint
H-20A	3/4Dr Sliding T Hdle
H-41AA	3/4Dr FlHdl Chr22-1/8
H-51AB1	3/4Dr Ratchet 24-11/16
HM-1219	3/4Dr Skt12pt 19mm
HM-1222	3/4Dr Skt12pt 22mm
HM-1224	3/4Dr Skt12pt 24mm
HM-1227	3/4Dr Skt12pt 27mm
HM-1230	3/4Dr Skt12pt 30mm
HM-1232	3/4Dr Skt12pt 32mm
HM-1235	3/4Dr Skt12pt 35mm
HM-1236	3/4Dr Skt12pt 36mm
HM-1238	3/4Dr Skt12pt 38mm
HM-1241	3/4Dr Skt12pt 41mm

Contents: Mammoth Set Metric WSC-1390MM (con't)

Product Code	Description
HM-1246	3/4Dr Skt12pt 46mm
HM-1250	3/4Dr Skt12pt 50mm
HM-1254	3/4Dr Skt12pt 54mm
HM-1255	3/4Dr Skt12pt 55mm
HM-1260	3/4Dr Skt12pt 60mm
HNx-130	3/4Dr ADp 3/4 Fx1 M
HNx-131	3/4Dr ADp 3/4 Mx1 F
HSB-25	Brass Hmr 2-1/2 Lb
HSB-4	Brass Hmr 4 Lb
HSF-152A	Hmr Body 1-1/4 Lb 1-1/2
HSF-15N	Hmr Tip Med Hard 1-1/2
HSF-15S	Hmr Tip Soft 1-1/2
HSF-15xH	Hmr Tip Extra Hard1-1/2
JHW-16	Dead Blow Hmr16oz
JHW-32	Dead Blow Hmr32oz
M-102	1/4DrExt2
M-104	1/4DrExt4
M-106A	1/4DrSpinner Hdle
M-110	1/4DrExt 10
M-115	1/4DrExt6
M-140A	1/4DrU-Joint
M-15A	1/4DrSpeeder
M-20A	1/4DrSliding T Hdle
M-42A	1/4DrFlHdl
M-52EHA	1/4Dr EncHd Ratchet 5
MFE-6	1/4Dr Flible Ext 6
MM-604	Mm Skt6pt 4mm
MM-605	Mm Skt6pt 5mm
MM-6055	Mm Skt6pt 55mm
MM-606	Mm Skt6pt 6mm
MM-607	Mm Skt6pt 7mm
MM-608	Mm Skt6pt 8mm
MM-609	Mm Skt6pt 9mm
MM-610	Mm Skt6pt 10mm
MM-611	Mm Skt6pt 11mm
MM-612	Mm Skt6pt 12mm
MM-613	Mm Skt6pt 13mm
MM-614	Mm Skt6pt 14mm
MMD-604	Mm Dp Skt6pt 4mm
MMD-605	Mm Dp Skt6pt 5mm
MMD-6055	Mm Dp Skt6pt 55mm
MMD-606	Mm Dp Skt6pt 6mm
MMD-607	Mm Dp Skt6pt 7mm
MMD-608	Mm Dp Skt6pt 8mm
MMD-609	Mm Dp Skt6pt 9mm
MMD-610	Mm Dp Skt6pt10mm
MMD-611	Mm Dp Skt6pt 11mm
MMD-612	Mm Dp Skt6pt 12mm
MMD-613	Mm Dp Skt6pt 13mm
MMD-614	Mm Dp Skt6pt 14mm
MWS-27	Hex Key Set 11-pcs
MWS-47	Hex Key Set 7-pcs
O-471	Adj Pin Spr 3/4 To 2
O-472	Adj Pin Spr 1-1/4 To 3
P-10	Pinpch 7 StSz 1/2
P-13	Sldpch 4-1/2 StSz 5/16
P-14	Sldpch 4-1/2 StSz 5/16
P-15	Sldpch 5 StSz 3/8
P-16	Sldpch 5 StSz 3/8
P-17	Sldpch 6 StSz 1/2
P-25	LgTprPch 8-1/2 StSz 1/2
P-26	LgTprPch 9 StSz 1/2
P-28	LgTprPch 11 StSz 5/8
P-3	Pinpch 4-3/4 StSz 5/16
P-30	Prickpch 5 StSz 3/8
P-4	Pinpch 5 StSz 5/16
P-40	Centerpch 5 StSz 3/8
P-42	Centerpch 6 StSz 1/2
P-5	Pinpch 5-1/4 StSz 5/16
P-6	Pinpch 5-1/2 StSz 5/16
P-8	Pinpch 7 StSz 3/8
PL-1515	Lck Rg Pls8
PL1519C	Superjoint Pls 5
PL-1600C	Snap Rg Pls & Tips Set
PL-529	Hvy Dty Snap Rg Pls Set
PL-533	Fixed Tip Ret Rg Pl-Ext
PL-534	Fixed Tip Ret Rg Pl-Ext
PLS-6A	General Service Pls Set
RBM-0708	Mm RatBxWR 7x 8mm
RBM-0910	Mm RatBxWR 9x 10mm
RBM-1112	Mm RatBxWR 11x 12mm
RBM-1314	Mm RatBxWR 13x 14mm
RBM-1517	Mm RatBxWR 15x 17mm
RBM-22	RatBxWR 22mm
RBM-23	RatBxWR 23mm
RBM-24	RatBxWR 24mm
RBM-25	RatBxWR 25mm
RBM-26	RatBxWR 26mm
RBM-27	RatBxWR 27mm
RBM-29	RatBxWR 29mm
RBM-30	RatBxWR 30mm
RBM-32	RatBxWR 32mm
RBM-36	RatBxWR 36mm
S-102P	1/2Dr Ext2
S-10A	1/2Dr Speeder 13-5/8
S-110P	1/2Dr Ext5
S-115P	1/2Dr Ext10
S-121P	1/2Dr Ext20
S-140A	1/2DrU-Joint
S-15A	1/2Dr Speeder 18-1/16
S-20A	1/2Dr Sliding T Hdle
S-40AA	1/2Dr FlHdl 10-7/16
S-41AA	1/2Dr FlHdl 15-1/2
S-52EH	1/2Dr EncHd Rat 10-3/8
S-52EHL	1/2Dr EncHd Rat 15
S-60D	1/2Dr Stud Remover
S-70	1/2Dr Ratchet Spinner
SB-30	1/2DrDragLnk Skt 1-1/2
SB-40	1/2DrDragLnk Skt 1-9/16
SB-40AA	1/2Dr FlHdl 10-13/16 Blk
SB-526	1/2Dr Penta-Skt
SH-130	1/2Dr ADp 1/2 Fx3/4 M
SMD-1213	Mm Dp Skt12pt 13mm
SMD-1214	Mm Dp Skt12pt 14mm
SMD-1215	Mm Dp Skt12pt 15mm
SMD-1216	Mm Dp Skt12pt 16mm
SMD-1217	Mm Dp Skt12pt 17mm
SMD-1218	Mm Dp Skt12pt 18mm
SMD-1219	Mm Dp Skt12pt 19mm
SMD-1221	Mm Dp Skt12pt 21mm
SMD-1222	Mm Dp Skt12pt 22mm
SMD-1224	Mm Dp Skt12pt 24mm
SMD-1227	Mm Dp Skt12pt 27mm
SMD-1230	Mm Dp Skt12pt 30mm
SS-20	SQ Shank Scr Sl 3
SS-24	SQ Shank Scr Sl 4
SS-26	SQ Shank Scr Sl 6
SS-28	SQ Shank Scr Sl 8
SS-33	SQ Shank Scr Sl 12
SS-62	SQ Shank Scr Sl Stby
STM-1210	1/2Dr Skt12pt 10mm
STM-1211	1/2Dr Skt12pt 11mm
STM-1212	1/2Dr Skt12pt 12mm
STM-1213	1/2Dr Skt12pt 13mm
STM-1214	1/2Dr Skt12pt 14mm
STM-1215	1/2Dr Skt12pt 15mm
STM-1216	1/2Dr Skt12pt 16mm
STM-1217	1/2Dr Skt12pt 17mm
STM-1218	1/2Dr Skt12pt 18mm
STM-1219	1/2Dr Skt12pt 19mm
STM-1220	1/2Dr Skt12pt 20mm
STM-1221	1/2Dr Skt12pt 21mm
STM-1222	1/2Dr Skt12pt 22mm
STM-1223	1/2Dr Skt12pt 23mm
STM-1224	1/2Dr Skt12pt 24mm
STM-1225	1/2Dr Skt12pt 25mm
STM-1226	1/2Dr Skt12pt 26mm
STM-1227	1/2Dr Skt12pt 27mm
STM-1228	1/2Dr Skt12pt 28mm
STM-1229	1/2Dr Skt12pt 29mm
STM-1230	1/2Dr Skt12pt 30mm
STM-1232	1/2Dr Skt12pt 32mm
STM-1234	1/2Dr Skt12pt 34mm
STM-1236	1/2Dr Skt12pt 36mm
TS38394	TurboSkt SavSkt 10mm
TS38472	TurboSkt SavSkt 12mm
TS38512	TurboSkt SavSkt 13mm
TS38551	TurboSkt SavSkt 14mm
TS38591	TurboSkt SavSkt 15mm
TS38669	TurboSkt SavSkt 17mm
WRS-1	Rat Scr
WRST1	T Hdle Rat Scr Stby
WS-44	Hex Key Set 13-pcs
WS-45	Hex Key Set 8-pcs

Contents: Mega Set WSC-960TB

Refer to Master Set Section for Photo and Description

Note: WSC-960 Includes All Tools Only, Without Tool Storage Cabinets

Product Code	Description
1002MFRMH	3/8Dr Cl Trq Wr 100 F-Lb
10111	Hex Key Set Sh 11-Pc
1020	OE Wr 1/4x5/16
10213	Hex Key Set Lg 13-Pc
1033C	OE Wr 15/16x1
1037	OE Wr 1-1/16x1-1/4
1037B	OE Wr1-1/8x1-3/16
10600	DblHd FL WR 3/8x7/16
10602	DblHd FL WR 1/2x9/16
10604	DblHd FL WR 5/8x11/16
10606	DblHd FL WR 3/4x7/8
10650	FL NUT WR 9x11 mm
10652	FL NUT WR 10x12 mm
10654	FL NUT WR 13x14 mm
10656	FL NUT WR 15x17 mm
10658	FL NUT WR 19x21 mm
1-100-04-3-2	4 Hd SM File w/PlHdl
1-100-08-1-2	8 Hd BST File w/Hdle
1-100-08-2-2	8 Hd 2ND File w/Hdle
1-111-04-3-2	4 WRD SM File w/PlHdl
1112	Min OE WRChrSat 3/16
1113	Min OE WRChrSat 13/64
1114	Min OE WRChrSat 7/32
1115	Min OE WRChrSat 15/64
1116	Min OE WRChrSat 1/4
1118	Min OE WRChrSat 9/32
1120	Min OE WRChrSat 5/16
1122	Min OE WRChrSat 11/32
1124	Min OE WRChrSat 3/8
1128	Min OE WRChrSat 7/16
11312	Stby Comb WRes 3/8
11314	Stby Comb WRes 7/16
11316	Stby Comb WRes 1/2
11318	Stby Comb WRes 9/16
1132	Min OE WRChrSat 1/2
11320	Stby Comb WRes 5/8
11322	Stby Comb WRes 11/16
11324	Stby Comb WRes 3/4
1136	Min OE WRChrSat 9/16
1140	Min OE WRChrSat 5/8
1-160-04-3-2	4 SQ SM File w/PlHdl
1-160-08-1-2	8 SQ BST File w/Hdle
1-170-04-3-2	4 3 SQ SM File w/PlHdl
11710	Stby Comb WRe Set 10 mm
11712	Stby Comb WRe Set 12 mm
11713	Stby Comb WRe Set 13 mm
11714	Stby Comb WRe Set 14 mm
11715	Stby Comb WRe Set 15 mm
11717	Stby Comb WRe Set 17 mm
11718	Stby Comb WRe Set 18 mm
11900	Fl Hd Comb WR 3/8
11901	Fl Hd Comb WR 7/16
11902	Fl Hd Comb WR 1/2
11903	Fl Hd Comb WR 9/16
11904	Fl Hd Comb WR 5/8
11905	Fl Hd Comb WR 11/16
11906	Fl Hd Comb WR 3/4
11920	Fl Hd SQDr 3/8x1/2
11952	Ofs Comb WR 3/8
11953	Ofs Comb WR 7/16
11954	Ofs Comb WR 1/2
11955	Ofs Comb WR 9/16
11956	Ofs Comb WR 5/8
11957	Ofs Comb WR 11/16
11958	Ofs Comb WR 3/4
11959	Ofs Comb WR 13/16
11960	Ofs Comb WR 7/8
1206MRC	6mm Rat Comb Wr
1207MSC	WRChrSat12pt 7mm
1208MRC	Rev Rat Comb WR 8 mm
1208MSC	WRChrSat12pt 8mm
1208RC	1/4 Rat Comb Wr
1209MRC	Rev Rat Comb WR 9 mm
1209MSC	WRChrSat12pt 9mm
1-210-04-3-2	4 1/2RD SM File w/PlHdl
1-210-08-1-2	8 1/2RD BST File w/Hdle
1210MRC	Rev Rat Comb WR 10 mm
1210MSC	WRChrSat12pt 10mm
1210RC	Rev Rat Comb WR 5/16
1210SC	WRChrSat12pt 5/16
1211MRC	Rev Rat Comb WR 11 mm
1211MSC	WRChrSat12pt 11mm
1212MRC	Rev Rat Comb WR 12 mm
1212MSC	WRChrSat12pt 12mm
1212RC	Rev Rat Comb WR 3/8
1212SC	WRChrSat12pt 3/8
1213MRC	Rev Rat Comb WR 13 mm
1213MSC	WRChrSat12pt 13mm
1214MRC	Rev Rat Comb WR 14 mm
1214MSC	WRChrSat12pt 14mm
1214RC	Rev Rat Comb WR 7/16
1214SC	WRChrSat12pt 7/16
1215MRC	Rev Rat Comb WR 15 mm
1215MSC	WRChrSat12pt 15mm
1216MRC	Rev Rat Comb WR 16 mm
1216RC	Rev Rat Comb WR 1/2
1216SC	WRChrSat12pt 1/2
1217MRC	Rev Rat Comb WR 17 mm
1217MSC	WRChrSat12pt 17mm
1218MRC	Rev Rat Comb WR 18 mm
1218MSC	WRChrSat12pt 18 mm
1218RC	Rev Rat Comb WR 9/16
1218SC	WRChrSat12pt 9/16
1219MRC	Rev Rat Comb WR 19 mm
1219MSC	WRChrSat12pt 19 mm
1220RC	Rev Rat Comb WR 5/8
1220SC	WRChrSat12pt 5/8
1221MSC	WRChrSat12pt 21 mm
1222MSC	WRChrSat12pt 22 mm
1222RC	Rev Rat Comb WR 11/16
1222SC	WRChrSat12pt 11/16
1224MSC	WRChrSat12pt 24 mm
1224RC	Rev Rat Comb WR 3/4
1224SC	WRChrSat12pt 3/4
1226SC	WRChrSat12pt 13/16
1227MSC	WRChrSat12pt 27 mm
1228SC	WRChrSat12pt 7/8
1-230-04-3-2	4 RD SM File w/PlHdl
1-230-08-1-2	8 RD BST File w/Hdle
1230MSC	WRChrSat12pt 30 mm
1230SC	WRChrSat12pt 15/16
1232MSC	WRChrSat12pt 32 mm
1232SC	WRChrSat12pt 1
1234MSC	WRChrSat12pt 34 mm
1234SC	WRChrSat12pt 1-1/16
1236MSC	WRChrSat12pt 36 mm
1236SC	WRChrSat12pt 1-1/8
1240SC	WRChrSat12pt 1-1/4
12601	Dbl Fl Hd WR 3/8x7/16
12603	Dbl Fl Hd WR 1/2x9/16
12605	Dbl Fl Hd WR 5/8x11/16
12607	Dbl Fl Hd WR 3/4x7/8
12-610	3/8Dr DpImSkt6pt 5/16
12-612	3/8Dr DpImSkt6pt 3/8
12-614	3/8Dr DpImSkt6pt 7/16
12-616	3/8Dr DpImSkt6pt 1/2
12-618	3/8Dr DpImSkt6pt 9/16
12-620	3/8Dr DpImSkt6pt 5/8
12-622	3/8Dr DpImSkt6pt 11/16
12-624	3/8Dr DpImSkt6pt 3/4
12-626	3/8Dr DpImSkt6pt 13/16
12-628	3/8Dr DpImSkt6pt 7/8
12-630	3/8Dr DpImSkt6pt 15/16
12-632	3/8Dr DpImSkt6pt 1
12M-607	3/8Dr DpImSkt6pt 7mm

Contents: Mega Set WSC-960TB (con't)

Product Code	Description
12M-608	3/8Dr DpImSkt6pt 8mm
12M-609	3/8Dr DpImSkt6pt 9mm
12M-610	3/8Dr DpImSkt6pt 10M
12M-611	3/8Dr DpImSkt6pt 11M
12M-612	3/8Dr DpImSkt6pt 12M
12M-613	3/8Dr DpImSkt6pt 13M
12M-614	3/8Dr DpImSkt6pt 14M
12M-615	3/8Dr DpImSkt6pt 15M
12M-616	3/8Dr DpImSkt6pt 16M
12M-617	3/8Dr DpImSkt6pt 17M
12M-618	3/8Dr DpImSkt6pt 18M
12M-619	3/8Dr DpImSkt6pt 19M
12M-620	3/8Dr DpImSkt6pt 20M
12M-621	3/8Dr DpImSkt6pt 21M
12M-622	3/8Dr DpImSkt6pt 22M
12M-623	3/8Dr DpImSkt6pt 23M
12M-624	3/8Dr DpImSkt6pt 24M
13406	Chr Adj WRes 6
13408	Chr Adj WRes 8
13410	Chr Adj WRes 10
13412	Chr Adj WRes 12
13418	18 Chr Adj Wr Pol Hd
13518	Cast Iron Pipe WR 8
13522	Cast Iron Pipe WR 12
13526	Cast Iron Pipe WR 18
13625	15 Const Adj WR
14-612	1/2Dr DpImSkt6pt 3/8
14-614	1/2Dr DpImSkt6pt 7/16
14-616	1/2Dr DpImSkt6pt 1/2
14-618	1/2Dr DpImSkt6pt 9/16
14-620	1/2Dr DpImSkt6pt 5/8
14-622	1/2Dr DpImSkt6pt11/16
14-624	1/2Dr DpImSkt6pt 3/4
14-626	1/2Dr DpImSkt6pt13/16
14-628	1/2Dr DpImSkt6pt 7/8
14-630	1/2Dr DpImSkt6pt15/16
14-632	1/2Dr DpImSkt6pt 1
14-634	1/2Dr DpImSkt6pt 1-1/16
14-636	1/2Dr DpImSkt6pt 1-1/8
14-638	1/2Dr DpImSkt6pt 1-3/16
14-640	1/2Dr DpImSkt6pt 1-1/4
14-642	1/2Dr DpImSkt6pt 1-5/16
14-644	1/2Dr DpImSkt6pt 1-3/8
14-646	1/2Dr DpImSkt6pt 1-7/16
14-648	1/2Dr DpImSkt6pt 1-1/2
1723	OE Wr 3/8x7/16
1725	OE Wr 7/16x1/2
1725B	OE Wr 1/2x9/16
1727	OE Wr 9/16x5/8
1729B	OE Wr 11/16x3/4
1731B	OE Wr 13/16x7/8
2-02B	3/8Dr Imp Ext 3
20401	20oz FG Crv Claw Hmr
20544	16oz Bl PN FG Hdle Hmr
20545	24oz Bl PN FG Hdle Hmr
20651	48oz CrPN FG LgHdl Hmr
20678	32ozDrilling FG Hdle Hmr
208	Mini Hksw Alum Hdle 10
2-103A	3/8Dr Imp Ext 3
2-106A	3/8Dr Imp Ext 6
2-140B	3/8Dr Imp Uni Joint
21661	2pc PryBar BmdHdl
23082	2pc Ret Rg Pls Set
23101	6-1/4 Sl Jt Pl
23103	9-3/4 Sl Jt Pl
23107	15-3/4 Gr Jt Pl 9 Pos
23152	Sd-Cut Comb Pls -8
23201	CrvJaw w/Ctr LckPl 5
23202	CrvJaw w/Ctr LckPl 7
23203	CrvJaw w/Ctr LckPl 10
23301	CrvJaw wire Ctr LckPl 5
23302	CrvJaw wire Ctr LckPl 7
23305	Str Jaw LckPl 10
23310	Lg Ns wire Ctr LckPls 9
23320	Lck C-Cl LckPl 6
23503	FrEnd Strip-Cut/Crimper
23506	Heavy Duty Stripper/Ctr
23535	Cg Super Stripper 20-30
23541	Elec Mini-Ctr 5-1/2
23542	Elec Mini-Stripper 5-1/2
23543	Elec Mini-Crimper 5-1/2
23602	8 Lnms BmdHdl
23603	9 Lnms Dipped Hdles
23604	5-1/2 Diag Cut BmdHdl
23607	8 Diag Cut BmdHdl
23609	6-1/4 Bent Nose BmdHdl
23610	5-1/2 Lg Ns BmdHdl
23612	8 Lg Ns BmdHdl
23702	Alligator Pl 6
23704	Alligator Pl 7 1/2
23706	Alligator Pl 9 1/2
24201	Cab Scr 1/8x4
24205	Sl Scr 3/16x4
24207	Cab Scr 3/16x3
24211	Cab Scr 3/16x6
24213	Cab Scr 3/16x10
24217	Sl Scr 1/4x1 1/2
24219	Sl Scr 1/4x4
24237	Sl Scr 5/16x6
24239	5/16x8 Rd Sl Bmd Hdle
24241	Sl Scr 3/8x8
24243	3/8x12 Rd Sl Bmd Hdle
24249	Ph Scr # 1x3
24251	Ph Scr # 2x1 1/2
24253	Ph Scr # 2x4
24259	#3x6 Ph Bmd Hdle
24263	Torx Scr T10x4
24265	Torx Scr T15x4
24267	Torx Scr T20x4
24269	Torx Scr T25x4
24271	Torx Scr T27x4
24273	Torx Scr T30x4
24401	3/16 Csh Gr Ntdrv
24403	1/4 Csh Gr Ntdrv
24405	5/16 Csh Gr Ntdrv
24407	11/32 Csh Gr Ntdrv
2-4A	3/8Dr Imp ADptr3/8Fx1/2M
2503MFRMH	1/2Dr Cl Trq Wr 250 F-Lb
2-608	3/8Dr ImSkt6pt 1/4
2-610	3/8Dr ImSkt6pt 5/16
2-612	3/8Dr ImSkt6pt 3/8
2-614	3/8Dr ImSkt6pt 7/16
2-616	3/8Dr ImSkt6pt 1/2
2-618	3/8Dr ImSkt6pt 9/16
2-620	3/8Dr ImSkt6pt 5/8
2-622	3/8Dr ImSkt6pt 11/1
2-624	3/8Dr ImSkt6pt 3/4
2-626	3/8Dr ImSkt6pt 13/1
2-628	3/8Dr ImSkt6pt 7/8
2-630	3/8Dr ImSkt6pt 15/1
2-632	3/8Dr ImSkt6pt 1
2653-9	Lnms'S Pl Comf Gr 9 -1/2
28201	Av Snips Left
28203	Av Snips Right
28205	Av Snips Str
2M-607	Std ImSkt6pt 7 mm
2M-608	Std ImSkt6pt 8 mm
2M-609	Std ImSkt6pt 9 mm
2M-610	Std ImSkt6pt 10 mm
2M-611	Std ImSkt6pt 11 mm
2M-612	Std ImSkt6pt 12 mm
2M-613	Std ImSkt6pt 13 mm
2M-614	Std ImSkt6pt 14 mm
2M-615	Std ImSkt6pt 15 mm
2M-616	Std ImSkt6pt 16 mm
2M-617	Std ImSkt6pt 17 mm
2M-618	Std ImSkt6pt 18 mm
2M-619	Std ImSkt6pt 19 mm
30009	1/4 Fx3/8 M Adapter
300-14-F15/16-HP	TlBx Saw Pl14 15TPI
31008	3/8 Fx1/4 M Adapter
31009	3/8 Fx1/2 M Adapter
31301	3/8Dr SpkPl Skt 5/8
31303	3/8Dr SpkPl Skt 13/16
32008	1/2 Fx3/8 M Adapter
32412	1/2Dr Skt 3/8
32414	1/2Dr Skt 7/16
32416	1/2Dr Skt 1/2
32418	1/2Dr Skt 9/16
32420	1/2Dr Skt 5/8
32422	1/2Dr Skt 11/16
32424	1/2Dr Skt 3/4
32426	1/2Dr Skt 13/16
32428	1/2Dr Skt 7/8
32430	1/2Dr Skt 15/16
32432	1/2Dr Skt 1
32434	1/2Dr Skt 1 1/16
32436	1/2Dr Skt 1 1/8
32438	1/2Dr Skt 1 3/16
32440	1/2Dr Skt 1 1/4
32448	1/2Dr Skt 1 1/2
325	Prof Hksw Hdle 12
33008	3/4F*1/2MAdapter
35040	1/4Dr ScrBt Skt Sl 5/32
35041	1/4Dr ScrBt Skt Sl 7/32
35042	1/4Dr ScrBt Skt Sl 9/32
35050	1/4Dr ScrBt Skt Ph # 0
35051	1/4Dr ScrBt Skt Ph # 1
35052	1/4Dr ScrBt Skt Ph # 2
35080	1/4Dr Torx Bit Skt T10
35081	1/4Dr Torx Bit Skt T15
35082	1/4Dr Torx Bit Skt T20
35083	1/4Dr Torx Bit Skt T25
35084	1/4Dr Torx Bit Skt T27
35085	1/4Dr Torx Bit Skt T30
35182	3/8Dr Torx Bit Skt T25
35183	3/8Dr Torx Bit Skt T27
35184	3/8Dr Torx Bit Skt T30
35185	3/8Dr Torx Bit Skt T40
35186	3/8Dr Torx Bit Skt T45
35187	3/8Dr Torx Bit Skt T47
35188	3/8Dr Torx Bit Skt T50
3816-300	Tung Carbide Hksw Bl 12
38216	3/4Dr Hex ImSkt 1/2
38218	3/4Dr Hex ImSkt 9/16
38220	3/4Dr Hex ImSkt 5/8
38224	3/4Dr Hex ImSkt 3/4
38226	3/4Dr Hex ImSkt 13/16
38228	3/4Dr Hex ImSkt 7/8
38232	3/4Dr Hex ImSkt 1
38238	3/4Dr Hex ImSkt 1 1/8
38240	3/4Dr Hex ImSkt 1 1/4
3840-100-10-SC-1P	BiRecipBL 4 10TPI
3840-100-18-SC-1P	BiRecipBL 4 18TPI
3840-100-24-ST-1P	BiRecipBL 4 24TPI U-Thg
3840-100-6-ST-1P	BiRecipBL 4 6TPI U-Thg
3840-150-10-ST-1P	BiRecipBL 6 10TPI U-Thg
3840-150-14-ST-1P	BiRecipBL 6 14TPI U-Thg
3840-150-18-ST-1P	BiRecipBL 6 18TPI U-Thg
3840-150-24-ST-1P	BiRecipBL 6 24TPI U-Thg
3840-150-5/8-SL-1P	BiRecipBL 6 5/8TPI
3840-150-7-SL-1P	BiRecipBL 6 7TPI
396-LAP	Fldg Saw Bmd 8 7TPI
40000	1/4x6 GsktScpr BmdHdl
40052	QckBl AutoUtKnife5pk 025
40058	Fldg Ut Knife
40072	QckBl DispBulk 100pk 025
40150	Tel Pick-Up Tl BmdHdl
40201	4pc MiniPick/Hook BmdHdl
40221	12 Strap WR
40251	4pc Ut Tl Set BmdHdl
40639	1/2Dr Imp ADpr1/2 Fx3/4
4-102	1/2Dr Imp Ext 3-1/2
4-105A	1/2Dr Imp Ext 5
4-110A	1/2Dr Imp Ext10
4-140B	1/2Dr Imp U-Joint
42302	Std Seat Creeper
4-2A	1/2Dr Imp ADpr1/2 Fx3/8
43605	Tube Ctr 1-1/8
43618	Pl Hose Ctr
4559-24	Bolt Ctr Cmf Grs 24
4-612	1/2Dr ImSkt6pt 3/8
4-614	1/2Dr ImSkt6pt7/16
4-616	1/2Dr ImSkt6pt1/2
4-618	1/2Dr ImSkt6pt9/16
4-620	1/2Dr ImSkt6pt5/8
4-622	1/2Dr ImSkt6pt11/16
4-624	1/2Dr ImSkt6pt3/4
4-626	1/2Dr ImSkt6pt13/16
4-628	1/2Dr ImSkt6pt7/8
4-630	1/2Dr ImSkt6pt15/16
4-632	1/2Dr ImSkt6pt1
4-634	1/2Dr ImSkt6pt1-1/16
4-636	1/2Dr ImSkt6pt1-1/8
4-638	1/2Dr ImSkt6pt1-3/16
4-640	1/2Dr ImSkt6pt1-1/4
4-642	1/2Dr ImSkt6pt1-5/16
4-644	1/2Dr ImSkt6pt1-3/8
4-646	1/2Dr ImSkt6pt1-7/16
4-648	1/2Dr ImSkt6pt1-1/2
471	Adj Hk Spner 3/4 To 2
472	Adj Hk Spner 1-1/4 To 3
474	Adj Hk Spner 2 To 4-3/4
4M-610	1/2Dr ImSkt6pt 10mm
4M-611	1/2Dr ImSkt6pt 11mm
4M-612	1/2Dr ImSkt6pt 12mm
4M-613	1/2Dr ImSkt6pt 13mm
4M-614	1/2Dr ImSkt6pt 14mm
4M-615	1/2Dr ImSkt6pt 15mm
4M-616	1/2Dr ImSkt6pt 16mm
4M-617	1/2Dr ImSkt6pt 17mm
4M-618	1/2Dr ImSkt6pt 18mm
4M-619	1/2Dr ImSkt6pt 19mm
4M-620	1/2Dr ImSkt6pt 20mm
4M-621	1/2Dr ImSkt6pt 21mm
4M-622	1/2Dr ImSkt6pt 22mm
4M-623	1/2Dr ImSkt6pt 23mm
4M-624	1/2Dr ImSkt6pt 24mm
4M-625	1/2Dr ImSkt6pt 25mm
4M-626	1/2Dr ImSkt6pt 26mm
4M-627	1/2Dr ImSkt6pt 27mm
4M-629	1/2Dr ImSkt6pt 29mm
4M-630	1/2Dr ImSkt6pt 30mm
4M-632	1/2DrImSkt6pt 32M
4M-634	1/2Dr ImSkt6pt 34mm
4M-636	1/2Dr ImSkt6pt 36mm
50721	3Drw 34 Cart-Rb Red
50855	1 Shlf 37 Hd Sdcb Red
625	Scrp1 TripleW/Hlstr
625-DROP	Drop-Shape Bl625 Scrp
625-PEAR	Pear-Shape Bl625 Scrp
625-RD	RD Bl625 Scrp
665	Scrp2-1/2 Dble Bl
8223	Adj Joint Pls 8
8225	Adj Joint Pls 12
860114	Bi Hksw Bl 12 18TPI
87079	10 Ton Manmaster Gear Set
9031RUS	Blkx-Wide Adj WR 8
9070RPUS	Blk Adj/Pipe WR 6
9072RPUS	Blk Adj/Pipe WR 10
9-12-51/3806-KP	Bws w/Bws & Hack Bl
9-467-00-0-0	File Cleaner
B-101	3/8Dr Ext 1 1/2
B-108	3/8Dr Ext 3
B-110	3/8Dr Ext 6
B-115	3/8Dr Ext 11
B-118	3/8Dr Ext 18
B-1208	Skt12pt 1/4
B-1210	Skt12pt 5/16
B-1212	Skt12pt 3/8
B-1214	Skt12pt 7/16
B-1216	Skt12pt 1/2
B-1218	Skt12pt 9/16
B-1220	Skt12pt 5/8
B-1222	Skt12pt 11/16
B-1224	Skt12pt 3/4
B-1226	Skt12pt 13/16
B-1228	Skt12pt 7/8
B-1230	Skt12pt 15/16
B-1232	Skt12pt 1
B-140A	3/8Dr U-Joint
B-15	3/8Dr Speeder
B-20A	3/8Dr Sliding T Hdle
B-40A	3/8Dr FlHdl
B-52EHA	3/8Dr Encl Hd Rat 8
B-52EHLA	3/8Dr Encl Hd Rat 10-3/4
B-70	Chr Ratchet Spinner
BA-10A	Sh HexBtSkt 5/16
BA-10A-3P	3/8Dr Ph Skt 3-Pt
BA-10A-3S	3/8Dr SlSkt 9/32x045
BA-10A-4S	3/8Dr SlSkt 5/16x055
BA-10HBA	Bl HexBtSkt 5/16
BA-10LA	Lg HexBtSkt 5/16
BA-12A	Sh HexBtSkt 3/8
BA-12A-4P	3/8Dr Ph Skt 4-Pt
BA-12HBA	Bl HexBtSkt 3/8
BA-12LA	Lg HexBtSkt 3/8
BA-4A	Sh HexBtSkt 1/8
BA-4HBA	Bl HexBtSkt 1/8
BA-4LA	Lg HexBtSkt 1/8
BA-5A	Sh HexBtSkt 5/32
BA-5A-1S	3/8Dr SlSkt 3/16x032
BA-5HBA	Bl HexBtSkt 5/32
BA-5LA	Lg HexBtSkt 5/32
BA-6A	Sh HexBtSkt 3/16
BA-6HBA	Bl HexBtSkt 3/16
BA-6LA	Lg HexBtSkt 3/16
BA-7A	Sh HexBtSkt 7/32
BA-7A-1P	3/8Dr Ph Skt 1-Pt
BA-7A-2P	3/8Dr Ph Skt 2-Pt
BA-7A-2S	3/8Dr SlSkt 7/32x040
BA-7HBA	Bl HexBtSkt 7/32
BA-7LA	Lg HexBtSkt 7/32
BA-8A	Sh HexBtSkt 1/4
BA-8HBA	Bl HexBtSkt 1/4
BA-8LA	Lg HexBtSkt 1/4
BD-1208	Dp Skt12pt 1/4
BD-1210	Dp Skt12pt 5/16
BD-1212	Dp Skt12pt 3/8
BD-1214	Dp Skt12pt 7/16
BD-1216	Dp Skt12pt 1/2
BD-1218	Dp Skt12pt 9/16
BD-1220	Dp Skt12pt 5/8
BD-1222	Dp Skt12pt 11/16
BD-1224	Dp Skt12pt 3/4
BD-1226	Dp Skt12pt 13/16
BD-1228	Dp Skt12pt 7/8
BD-1230	Dp Skt12pt 15/16
BD-1232	Dp Skt12pt 1
BD-808	3/8Dr Skt 8-Pt 1/4
BD-810	3/8Dr Skt 8-Pt 5/16
BD-812	3/8Dr Skt 8-Pt 3/8
BD-814	3/8Dr Skt 8-Pt 7/16
BD-816	3/8Dr Skt 8-Pt 1/2
BD-818	3/8Dr Skt 8-Pt 9/16
BD-820	3/8Dr Skt 8-Pt 5/8
BFE-8	3/8Dr Flible Ext 8
BHMD-30	3/8Dr Hd ImpDrr
BM-1206	6 mm 3/8Dr Std12pt Skt
BM-1207	7 mm 3/8Dr Std12pt Skt

Contents: Mega Set WSC-960TB (con't)

Product Code	Description
BM-1208	8 mm 3/8Dr Std12pt Skt
BM-1209	9 mm 3/8Dr Std12pt Skt
BM-1210	10 mm 3/8Dr Std12pt Skt
BM-1210	10 mm 3/8Dr Std12pt Skt
BM-1211	11 mm 3/8Dr Std12pt Skt
BM-1212	12 mm 3/8Dr Std12pt Skt
BM-1213	13 mm 3/8Dr Std12pt Skt
BM-1214	14 mm 3/8Dr Std12pt Skt
BM-1215	15 mm 3/8Dr Std12pt Skt
BM-1216	16 mm 3/8Dr Std12pt Skt
BM-1217	17 mm 3/8Dr Std12pt Skt
BM-1218	18 mm 3/8Dr Std12pt Skt
BM-1219	19 mm 3/8Dr Std12pt Skt
BM-1220	20 mm 3/8Dr Std12pt Skt
BM-1221	21 mm 3/8Dr Std12pt Skt
BM-1222	22 mm 3/8Dr Std12pt Skt
BM-1223	23 mm 3/8Dr Std12pt Skt
BM-1224	24 mm 3/8Dr Std12pt Skt
BM-1226	26 mm 3/8Dr Std12pt Skt
BS-05B	3/8Dr ADpr1/2 Fx3/8 M Blk
BS-12B	3/8Dr ADpr1/2 Fx3/8 M Blk
BU-1212	U-Skt12pt 3/8
BU-1214	U-Skt12pt 7/16
BU-1216	U-Skt12pt 1/2
BU-1218	U-Skt12pt 9/16
BU-1220	U-Skt12pt 5/8
BU-1222	U-Skt12pt 11/16
BU-1224	U-Skt12pt 3/4
BWM-0810	DblHd 10°Ofs BxWR 8x10
BWM-1113	DblHd 10°Ofs BxWR 11x013
BWM-1214	DblHd 10°Ofs BxWR 12x14
BWM-1415	DblHd 10°Ofs BxWR 14x15
BWM-1618	DblHd 10°Ofs BxWR 16x18
BWM-1719	DblHd 10°Ofs BxWR 17x19
BWM-1922	DblHd 10°Ofs BxWR 19x22
BWM-2124	DblHd 10°Ofs BxWR 21x24
BWM-2730	DblHd 10°Ofs BxWR 27x30
BWM-3032	DblHd 10°Ofs BxWR 30x32
C-10	Cd Chs 5 StSz 5/16
C-12	Cd Chs 5-1/4 StSz 5/16
C-16	Cd Chs 6 StSz 3/8
C-20	Cd Chs 6-1/2 StSz 1/2
C-24	Cd Chs 7 StSz 5/8
C-28	Cd Chs 7-1/2 StSz 3/8
C-32	Cd Chs 8 StSz 7/8
C-36	Cd Chs 8 StSz 7/8
C-715	RlBr 1/2 StSz 15-1/8
C-718	RlBr 5/8 StSz 18
C-8	Cd Chs 4-3/4 StSz 1/4
C-80A	Pch Bar 3/4 StSz 24
C-82A	Pch Bar 3/4 StSz 18
CC-404C	C-Cl Cpr Scr 4
CC-406C	C-Cl Cpr Scr 6
CW-4	Chain Wr
Ex-21A	ExtrDrill Sz 1/8
Ex-21B	ExtrDrill Sz 3/16
Ex-22A	ExtrDrill Sz 7/32
Ex-24A	ExtrDrill Sz 5/16
Ex-25A	ExtrDrill Sz 15/32
Ex-25B	ExtrDrill Sz 3/8
Ex-26A	ExtrDrill Sz 9/16
Ex-28	ExtrDrill Sz 21/32
Ex-29	ExtrDrill Sz 13/16
GS-1	Master Feeler Gauge Set
GSC-12	GsktScpr-8-3/4x1 1/2
H-104	3/4Dr Ext 3
H-110	3/4Dr Ext 8
H-115	3/4Dr Ext 16
H-1224	3/4Dr Skt12pt 3/4
H-1226	3/4Dr Skt12pt 13/16
H-1228	3/4Dr Skt12pt 7/8
H-1230	3/4Dr Skt12pt 15/16
H-1232	3/4Dr Skt12pt 1
H-1234	3/4Dr Skt12pt 1-1/16
H-1236	3/4Dr Skt12pt 1-1/8
H-1238	3/4Dr Skt12pt 1-3/16
H-1240	3/4Dr Skt12pt 1-1/4
H-1242	3/4Dr Skt12pt 1-5/16
H-1244	3/4Dr Skt12pt 1-3/8
H-1246	3/4Dr Skt12pt 1-7/16
H-1248	3/4Dr Skt12pt 1-1/2
H-1250	3/4Dr Skt12pt 1-9/16
H-1252	3/4Dr Skt12pt 1-5/8
H-1254	3/4Dr Skt12pt 1-11/16
H-1256	3/4Dr Skt12pt 1-3/4
H-1258	3/4Dr Skt12pt 1-13/16
H-1260	3/4Dr Skt12pt 1-7/8
H-1264	3/4Dr Skt12pt 2
H-1266	3/4Dr Skt12pt 2-1/16
H-1268	3/4Dr Skt12pt 2-1/8
H-1270	3/4Dr Skt12pt 2-3/16
H-1272	3/4Dr Skt12pt 2-1/4
H-1274	3/4Dr Skt12pt 2-5/16
H-1276	3/4Dr Skt12pt 2-3/8
H-140A	3/4Dr U-Joint
H-20A	3/4Dr Sliding T Hdle
H-41AA	3/4Dr FlHdl Chr22-1/8
H-51AB1	3/4Dr Ratchet 24-11/16
HNx-130	3/4Dr ADp 3/4 Fx1 M
HNx-131	3/4Dr ADp 3/4 Mx1 F
HSB-25	Brass Hmr 2-1/2 Lb
HSB-4	Brass Hmr 4 Lb
HSF-152A	Hmr Body 1-1/4 Lb 1-1/2
HSF-15N	Hmr Tip Med Hard 1-1/2
HSF-15S	Hmr Tip Soft 1-1/2
HSF-15xH	Hmr Tip Extra Hard1-1/2
JHW-16	Deadblow Hmr16oz
JHW-32	Deadblow Hmr32oz
M-102	1/4DrExt2
M-104	1/4DrExt4
M-106A	1/4DrSpinner Hdle
M-110	1/4DrExt 10
M-115	1/4DrExt6
M-140A	1/4DrU-Joint
M-15A	1/4DrSpeeder
M-20A	1/4DrSliding T Hdle
M-42A	1/4DrFlHdl
M-52EHA	1/4Dr Encl Hd Ratchet 5
M-605	Skt6pt 5/32
M-606	Skt6pt 3/16
M-607	Skt6pt 7/32
M-608	Skt6pt 1/4
M-609	Skt6pt 9/32
M-610	Skt6pt 5/16
M-611	Skt6pt 11/32
M-612	Skt6pt 3/8
M-614	Skt6pt 7/16
M-616	Skt6pt 1/2
M-618	Skt6pt 9/16
M-808	1/4Dr Skt 8-Pt 1/4
M-810	1/4Dr Skt 8-Pt 5/16
M-812	1/4Dr Skt 8-Pt 3/8
MA-10A	1/4Dr HexBtSkt 5/16
MA-2-1/2A	1/4Dr HexBtSkt 5/64
MA-2A	1/4Dr HexBtSkt 1/16
MA-3-1/2A	1/4Dr HexBtSkt 7/64
MA-3A	1/4Dr HexBtSkt 3/32
MA-4-1/2A	1/4Dr HexBtSkt 9/64
MA-45SA	1/4Dr 9/64x-S HexBtSkt
MA-4A	1/4Dr HexBtSkt 1/8
MA-4SA	1/4Dr 1/8x-Sh HexBtSkt
MA-5A	1/4Dr HexBtSkt 5/32
MA-5SA	1/4Dr 5/32x-S HexBtSkt
MA-6A	1/4Dr HexBtSkt 3/16
MA-6SA	1/4Dr 3/16x-Sh HexBtSkt
MA-7A	1/4Dr HexBtSkt 7/32
MA-8A	1/4Dr HexBtSkt 1/4
MFE-6	1/4Dr Flible Ext 6
MM-604	Mm Skt6pt 4mm
MM-605	Mm Skt6pt 5mm
MM-6055	Mm Skt6pt 55mm
MM-606	Mm Skt6pt 6mm
MM-607	Mm Skt6pt 7mm
MM-608	Mm Skt6pt 8mm
MM-609	Mm Skt6pt 9mm
MM-610	Mm Skt6pt 10mm
MM-611	Mm Skt6pt 11mm
MM-612	Mm Skt6pt 12mm
MM-613	Mm Skt6pt 13mm
MM-614	Mm Skt6pt 14mm
MWS-27	Hex Key Set 11-Pcs
MWS-30	RatBxWR Set 5-Pc
MWS-31	OE Wr Set 10-Pc
MWS-47	Hex Key Set 7-Pcs
O-471	Adj Pin Spner 3/4 To 2
O-472	Adj Pin Spner 1-1/4 To 3
OES-0607	Dbl Oe WR 3/16x7/32Sh
OES-0809	Dbl Oe WR 1/4x9/32Sht
OES-1011	Dbl Oe WR 5/16x11/32S
OES-1214	Dbl Oe WR 3/8x7/16Sht
OES-1618	Dbl Oe WR 1/2x9/16Sht
P-10	Pinpch 7 StSz 1/2
P-13	Sldpch 4-1/2 StSz 5/16
P-14	Sldpch 4-1/2 StSz 5/16
P-15	Sldpch 5 StSz 3/8
P-16	Sldpch 5 StSz 3/8
P-17	Sldpch 6 StSz 1/2
P-25	LgTprPch 8-1/2 StSz 1/2
P-26	LgTprPch 9 StSz 1/2
P-28	LgTprPch 11 StSz 5/8
P-3	Pinpch 4-3/4 StSz 5/16
P-30	Prickpch 5 StSz 3/8
P-4	Pinpch 5 StSz 5/16
P-40	Centerpch 5 StSz 3/8
P-42	Centerpch 6 StSz 1/2
P-5	Pinpch 5-1/4 StSz 5/16
P-6	Pinpch 5-1/2 StSz 5/16
P-8	Pinpch 7 StSz 3/8
PL-1515	Lck Rg Pls8
PL1519C	Superjoint Pls 5
PL-1600C	Snap Rg Pls & Tips Set
PL-533	Fixed Tip Ret Rg Pl-Ext
PL-534	Fixed Tip Ret Rg Pl-Ext
PLS-6A	General Service Pls Set
RB-1214	Rat Chr 6pt 3/8x7/16
RB-1618	Rat Chr 6pt 1/2x9/16
RB-2022	Rat Chr 12pt 5/8x11/16
RB-2428	Rat Chr 12pt 3/4x7/8
RB-810	Rat Chr 6pt 1/4x5/16
S-102P	1/2Dr Ext2
S-10A	1/2Dr Speeder 13-5/8
S-110P	1/2Dr Ext5
S-115P	1/2Dr Ext10
S-121P	1/2Dr Ext20
S-140A	1/2DrU-Joint
S-15A	1/2Dr Speeder 18-1/16
S-20A	1/2Dr Sliding T Hdle
S-40AA	1/2Dr FlHdl 10-7/16
S-41AA	1/2Dr FlHdl 15-1/2
S-52EH	1/2Dr Encl Hd Rat 10-3/8
S-52EHL	1/2Dr Encl Hd Rat 15
S-60D	1/2Dr Stud Remover
S-70	1/2Dr Ratchet Spinner
SA-10A	HexBtSkt 5/16
SA-10A-3P	1/2Dr Ph Skt 3-Pt
SA-10A-3S	1/2Dr SlBitSkt 23/64x061
SA-10LA	Lg HexBtSkt 5/16
SA-12A	HexBtSkt 3/8
SA-12A-4P	1/2Dr Ph Skt 4-Pt
SA-12A-4S	1/2Dr SlBitSkt27/64x075
SA-12LA	Lg HexBtSkt 3/8
SA-16A	HexBtSkt 1/2
SA-16LA	Lg HexBtSkt 1/2
SA-18A	HexBtSkt 9/16
SA-18LA	Lg HexBtSkt 9/16
SA-20A	HexBtSkt 5/8
SA-20LA	Lg HexBtSkt 5/8
SA-8A	HexBtSkt 1/4
SA-8LA	Lg HexBtSkt 1/4
SB-30	1/2DrDragLnk Skt 1-1/2
SB-40	1/2DrDragLnk Skt 1-9/16
SB-40AA	1/2Dr FlHdl 10-13/16 Blk
SH-130	1/2Dr ADp 1/2 Fx3/4 M
SS-20	SQ Shank Scr Sl 3
SS-24	SQ Shank Scr Sl 4
SS-26	SQ Shank Scr Sl 6
SS-28	SQ Shank Scr Sl 8
SS-33	SQ Shank Scr Sl 12
SS-62	SQ Shank Scr Sl Stby
ST-1212	1/2Dr Std12ptSkt 3/8
ST-1214	1/2Dr Std12ptSkt 7/16
ST-1216	1/2Dr Std12ptSkt 1/2
ST-1218	1/2Dr Std12ptSkt 9/16
ST-1219	1/2Dr Std12ptSkt 19/32
ST-1220	1/2Dr Std12ptSkt 5/8
ST-1221	1/2Dr Std12ptSkt 21/32
ST-1222	1/2Dr Std12ptSkt 11/16
ST-1224	1/2Dr Std12ptSkt 3/4
ST-1225	1/2Dr Std12ptSkt 25/32
ST-1226	1/2Dr Std12ptSkt 13/16
ST-1228	1/2Dr Std12ptSkt 7/8
ST-1230	1/2Dr Std12ptSkt 15/16
ST-1231	1/2Dr Std12ptSkt 31/32
ST-1232	1/2Dr Std12ptSkt 1
ST-1234	1/2Dr Std12ptSkt 1 1/16
ST-1236	1/2Dr Std12ptSkt 1 1/8
ST-1238	1/2Dr Std12ptSkt 1 3/16
ST-1240	1/2Dr Std12ptSkt 1 1/4
ST-1242	1/2Dr Std12ptSkt 1 5/16
ST-1244	1/2Dr Std12ptSkt 1 3/8
ST-1246	1/2Dr Std12ptSkt 1 7/16
ST-1248	1/2Dr Std12ptSkt 1 1/2
ST-812	1/2Dr Std8ptSkt 3/8
ST-814	1/2Dr Std8ptSkt 7/16
ST-816	1/2Dr Std8ptSkt 1/2
ST-818	1/2Dr Std8ptSkt 9/16
ST-820	1/2Dr Std8ptSkt 5/8
ST-822	1/2Dr Std8ptSkt 11/16
ST-824	1/2Dr Std8ptSkt 3/4
ST-826	1/2Dr Std8ptSkt 13/16
ST-828	1/2Dr Std8ptSkt 7/8
ST-830	1/2Dr Std8ptSkt 15/16
ST-832	1/2Dr Std8ptSkt 1
ST-834	1/2Dr Std8ptSkt 1 1/16
ST-836	1/2Dr Std8ptSkt 1 1/8
ST-840	1/2Dr Std8ptSkt 1 1/4
ST-840	1/2Dr Std8ptSkt 1 1/4
STM-1210	1/2Dr Skt12pt 10mm
STM-1211	1/2Dr Skt12pt 11mm
STM-1212	1/2Dr Skt12pt 12mm
STM-1213	1/2Dr Skt12pt 13mm
STM-1214	1/2Dr Skt12pt 14mm
STM-1215	1/2Dr Skt12pt 15mm
STM-1216	1/2Dr Skt12pt 16mm
STM-1217	1/2Dr Skt12pt 17mm
STM-1218	1/2Dr Skt12pt 18mm
STM-1219	1/2Dr Skt12pt 19mm
STM-1220	1/2Dr Skt12pt 20mm
STM-1221	1/2Dr Skt12pt 21mm
STM-1222	1/2Dr Skt12pt 22mm
STM-1223	1/2Dr Skt12pt 23mm
STM-1224	1/2Dr Skt12pt 24mm
STM-1225	1/2Dr Skt12pt 25mm
STM-1226	1/2Dr Skt12pt 26mm
STM-1227	1/2Dr Skt12pt 27mm
STM-1228	1/2Dr Skt12pt 28mm
STM-1229	1/2Dr Skt12pt 29mm
STM-1230	1/2Dr Skt12pt 30mm
STM-1232	1/2Dr Skt12pt 32mm
STM-1234	1/2Dr Skt12pt 34mm
STM-1236	1/2Dr Skt12pt 36mm
W53RC6BS	53 Roll Cabinet
W53TC8	53 Top Chest
WRS-1	Rat Scrr
WRST1	T Hdle Rat Scdr Stby
WS-44	Hex Key Set 13-Pcs
WS-45	Hex Key Set 8-Pcs
WS-7707	BxWR Set 7-Pc
WTC-11	Wire Twister/Ctr 8-1/2

Contents: Mega Set Fractional WSC-960SAE

Refer to Master Set Section for Photo and Description

Product Code	Description
1002MFRMH	3/8Dr Cl Trq Wr 100 F-Lb
10111	Hex Key Set Sh 11-Pc
1020	OE Wr 1/4x5/16
10213	Hex Key Set Lg 13-Pc
1037	OE Wr 1-1/16x1-1/4
1033C	OE Wr 15/16x1
1037B	OE Wr1-1/8x1-3/16
10600	DblHd FL WR 3/8x7/16
10602	DblHd FL WR 1/2x9/16
10604	DblHd FL WR 5/8x11/16

Contents: Mega Set Fractional WSC-960SAE (con't)

Product Code	Description
10606	DblHd FL WR 3/4x7/8
1112	Min OE WRChrSat 3/16
1113	Min OE WRChrSat 13/64
1114	Min OE WRChrSat 7/32
1115	Min OE WRChrSat 15/64
1116	Min OE WRChrSat 1/4
1118	Min OE WRChrSat 9/32
1120	Min OE WRChrSat 5/16
1122	Min OE WRChrSat 11/32
1124	Min OE WRChrSat 3/8
1128	Min OE WRChrSat 7/16
1132	Min OE WRChrSat 1/2
1136	Min OE WRChrSat 9/16
11312	Stby Comb WRes 3/8
11314	Stby Comb WRes 7/16
11316	Stby Comb WRes 1/2
11318	Stby Comb WRes 9/16
11320	Stby Comb WRes 5/8
11322	Stby Comb WRes 11/16
11324	Stby Comb WRes 3/4
1140	Min OE WRChrSat 5/8
11900	Fl Hd Comb WR 3/8
11901	Fl Hd Comb WR 7/16
11902	Fl Hd Comb WR 1/2
11903	Fl Hd Comb WR 9/16
11904	Fl Hd Comb WR 5/8
11905	Fl Hd Comb WR 11/16
11906	Fl Hd Comb WR 3/4
11920	Fl Hd SQDr 3/8x1/2
11952	Ofs Comb WR 3/8
11953	Ofs Comb WR 7/16
11954	Ofs Comb WR 1/2
11955	Ofs Comb WR 9/16
11956	Ofs Comb WR 5/8
11957	Ofs Comb WR 11/16
11958	Ofs Comb WR 3/4
11959	Ofs Comb WR 13/16
11960	Ofs Comb WR 7/8
1206MRC	6Mm Rat Comb Wr
1208RC	1/4 Rat Comb Wr
1210RC	Rev Rat Comb WR 5/16
1210SC	WRChrSat12pt 5/16
1212RC	Rev Rat Comb WR 3/8
1212SC	WRChrSat12pt 3/8
1214RC	Rev Rat Comb WR 7/16
1214SC	WRChrSat12pt 7/16
1216RC	Rev Rat Comb WR 1/2
1216SC	WRChrSat12pt 1/2
1218RC	Rev Rat Comb WR 9/16
1218SC	WRChrSat12pt 9/16
1220RC	Rev Rat Comb WR 5/8
1220SC	WRChrSat12pt 5/8
1222RC	Rev Rat Comb WR 11/16
1222SC	WRChrSat12pt 11/16
1224RC	Rev Rat Comb WR 3/4
1224SC	WRChrSat12pt 3/4
1226SC	WRChrSat12pt 13/16
1228SC	WRChrSat12pt 7/8
1230SC	WRChrSat12pt 15/16
1232SC	WRChrSat12pt 1
1234SC	WRChrSat12pt 1-1/16
1236SC	WRChrSat12pt 1-1/8
1240SC	WRChrSat12pt 1-1/4
12601	Dbl Fl Hd WR 3/8x7/16
12603	Dbl Fl Hd WR 1/2x9/16
12605	Dbl Fl Hd WR 5/8x11/16
12607	Dbl Fl Hd WR 3/4x7/8
12-610	3/8Dr DpImSkt6pt 5/16
12-612	3/8Dr DpImSkt6pt 3/8
12-614	3/8Dr DpImSkt6pt 7/16
12-616	3/8Dr DpImSkt6pt 1/2
12-618	3/8Dr DpImSkt6pt 9/16
12-620	3/8Dr DpImSkt6pt 5/8
12-622	3/8Dr DpImSkt6pt 11/16
12-624	3/8Dr DpImSkt6pt 3/4
12-626	3/8Dr DpImSkt6pt 13/16
12-628	3/8Dr DpImSkt6pt 7/8
12-630	3/8Dr DpImSkt6pt 15/16
12-632	3/8Dr DpImSkt6pt 1
13406	Chr Adj WRes 6
13408	Chr Adj WRes 8
13410	Chr Adj WRes 10
13412	Chr Adj WRes 12
13418	18 Chr Adj Wr Pol Hd
13518	Cast Iron Pipe WR 8
13522	Cast Iron Pipe WR 12
13526	Cast Iron Pipe WR 18
13625	15 Const Adj WR
14-612	1/2Dr DpImSkt6pt 3/8
14-614	1/2Dr DpImSkt6pt 7/16
14-616	1/2Dr DpImSkt6pt 1/2
14-618	1/2Dr DpImSkt6pt 9/16
14-620	1/2Dr DpImSkt6pt 5/8
14-622	1/2Dr DpImSkt6pt11/16
14-624	1/2Dr DpImSkt6pt 3/4
14-626	1/2Dr DpImSkt6pt13/16
14-628	1/2Dr DpImSkt6pt 7/8
14-630	1/2Dr DpImSkt6pt15/16
14-632	1/2Dr DpImSkt6pt 1
14-634	1/2Dr DpImSkt6pt 1-1/16
14-636	1/2Dr DpImSkt6pt 1-1/8
14-638	1/2Dr DpImSkt6pt 1-3/16
14-640	1/2Dr DpImSkt6pt 1-1/4
14-642	1/2Dr DpImSkt6pt 1-5/16
14-644	1/2Dr DpImSkt6pt 1-3/8
14-646	1/2Dr DpImSkt6pt 1-7/16
14-648	1/2Dr DpImSkt6pt 1-1/2
1723	OE Wr 3/8x7/16
1725	OE Wr 7/16x1/2
1727	OE Wr 9/16x5/8
1725B	OE Wr 1/2x9/16
1729B	OE Wr 11/16x3/4
1731B	OE Wr 13/16x7/8
1-100-04-3-2	4 Hd SM File w/PlHdl
1-100-08-1-2	8 Hd BST File w/Hdle
1-100-08-2-2	8 Hd 2ND File w/Hdle
1-111-04-3-2	4 WRD SM File w/PlHdl
1-160-04-3-2	4 SQ SM File w/PlHdl
1-160-08-1-2	8 SQ BST File w/Hdle
1-170-04-3-2	4 3 SQ SM File w/PlHdl
1-210-04-3-2	4 1/2RD SM File w/PlHdl
1-210-08-1-2	8 1/2RD BST File w/Hdle
1-230-04-3-2	4 RD SM File w/PlHdl
1-230-08-1-2	8 RD BST File w/Hdle
20401	20oz FG Crv Claw Hmr
20544	16oz Bl PN FG Hdle Hmr
20545	24oz Bl PN FG Hdle Hmr
20651	48oz CrPN FG LgHdl Hmr
20678	32ozDrilling FG Hdle Hmr
208	Mini Hksw Alum Hdle 10
21661	2pc PryBar BmdHdl
23082	2pc Ret Rg Pls Set
23101	6-1/4 Sl Jt Pl
23103	9-3/4 Sl Jt Pl
23107	15-3/4 Gr Jt Pl 9 Pos
23152	Sd-Cut Comb Pls -8
23201	CrvJaw w/Ctr LckPl 5
23202	CrvJaw w/Ctr LckPl 7
23203	CrvJaw w/Ctr LckPl 10
23301	CrvJaw wire Ctr LckPl 5
23302	CrvJaw wire Ctr LckPl 7
23305	Str Jaw LckPl 10
23310	Lg Ns wire Ctr LckPls 9
23320	Lck C-Cl LckPl 6
23503	FrEnd Strip-Cut/Crimper
23506	Heavy Duty Stripper/Ctr
23535	Cg Super Stripper 20-30
23541	Elec Mini-Ctr 5-1/2
23542	Elec Mini-Stripper 5-1/2
23543	Elec Mini-Crimper 5-1/2
23602	8 Lnms BmdHdl
23603	9 Lnms Dipped Hdles
23604	5-1/2 Diag Cut BmdHdl
23607	8 Diag Cut BmdHdl
23609	6-1/4 Bent Nose BmdHdl
23610	5-1/2 Lg Ns BmdHdl
23612	8 Lg Ns BmdHdl
23702	Alligator Pl 6
23704	Alligator Pl 7 1/2
23706	Alligator Pl 9 1/2
24201	Cab Scr 1/8x4
24205	Sl Scr 3/16x4
24207	Cab Scr 3/16x3
24211	Cab Scr 3/16x6
24213	Cab Scr 3/16x10
24217	Sl Scr 1/4x1 1/2
24219	Sl Scr 1/4x4
24237	Sl Scr 5/16x6
24239	5/16x8 Rd Sl Bmd Hdle
24241	Sl Scr 3/8x8
24243	3/8x12 Rd Sl Bmd Hdle
24249	Ph Scr # 1x3
24251	Ph Scr # 2x1 1/2
24253	Ph Scr # 2x4
24259	#3x6 Ph Bmd Hdle
24263	Torx Scr T10x4
24265	Torx Scr T15x4
24267	Torx Scr T20x4
24269	Torx Scr T25x4
24271	Torx Scr T27x4
24273	Torx Scr T30x4
24401	3/16 Csh Gr Ntdrv
24403	1/4 Csh Gr Ntdrv
24405	5/16 Csh Gr Ntdrv
24407	11/32 Csh Gr Ntdrv
2503MFRMH	1/2Dr Cl Trq Wr 250 F-Lb
2653-9	Lnms'S Pl Comf Gr 9 -1/2
28201	Av Snips Left
28203	Av Snips Right
28205	Av Snips Str
2-02B	3/8Dr Imp Ext 3
2-103A	3/8Dr Imp Ext 3
2-106A	3/8Dr Imp Ext 6
2-140B	3/8Dr Imp Uni Joint
2-4A	3/8Dr Imp ADptr3/8Fx1/2M
2-608	3/8Dr ImSkt6pt 1/4
2-610	3/8Dr ImSkt6pt 5/16
2-612	3/8Dr ImSkt6pt 3/8
2-614	3/8Dr ImSkt6pt 7/16
2-616	3/8Dr ImSkt6pt 1/2
2-618	3/8Dr ImSkt6pt 9/16
2-620	3/8Dr ImSkt6pt 5/8
2-622	3/8Dr ImSkt6pt 11/1
2-624	3/8Dr ImSkt6pt 3/4
2-626	3/8Dr ImSkt6pt 13/1
2-628	3/8Dr ImSkt6pt 7/8
2-630	3/8Dr ImSkt6pt 15/1
2-632	3/8Dr ImSkt6pt 1
30009	1/4 Fx3/8 M Adapter
300-14-F15/16-HP	TlBx Saw Pl14 15TPI
31008	3/8 Fx1/4 M Adapter
31009	3/8 Fx1/2 M Adapter
31301	3/8Dr SpkPl Skt 5/8
31303	3/8Dr SpkPl Skt 13/16
32008	1/2 Fx3/8 M Adapter
32412	1/2Dr Skt 3/8
32414	1/2Dr Skt 7/16
32416	1/2Dr Skt 1/2
32418	1/2Dr Skt 9/16
32420	1/2Dr Skt 5/8
32422	1/2Dr Skt 11/16
32424	1/2Dr Skt 3/4
32426	1/2Dr Skt 13/16
32428	1/2Dr Skt 7/8
32430	1/2Dr Skt 15/16
32432	1/2Dr Skt 1
32434	1/2Dr Skt 1 1/16
32436	1/2Dr Skt 1 1/8
32438	1/2Dr Skt 1 3/16
32440	1/2Dr Skt 1 1/4
32448	1/2Dr Skt 1 1/2
325	Prof Hksw Hdle 12
33008	3/4F*1/2MAdapter
35040	1/4Dr ScrBt Skt Sl 5/32
35041	1/4Dr ScrBt Skt Sl 7/32
35042	1/4Dr ScrBt Skt Sl 9/32
35050	1/4Dr ScrBt Skt Ph # 0
35051	1/4Dr ScrBt Skt Ph # 1
35052	1/4Dr ScrBt Skt Ph # 2
35080	1/4Dr Torx Bit Skt T10
35081	1/4Dr Torx Bit Skt T15
35082	1/4Dr Torx Bit Skt T20
35083	1/4Dr Torx Bit Skt T25
35084	1/4Dr Torx Bit Skt T27
35085	1/4Dr Torx Bit Skt T30
35182	3/8Dr Torx Bit Skt T25
35183	3/8Dr Torx Bit Skt T27
35184	3/8Dr Torx Bit Skt T30
35185	3/8Dr Torx Bit Skt T40
35186	3/8Dr Torx Bit Skt T45
35187	3/8Dr Torx Bit Skt T47
35188	3/8Dr Torx Bit Skt T50
3816-300	Tung Carbide Hksw Bl 12
38216	3/4Dr Hex ImSkt 1/2
38218	3/4Dr Hex ImSkt 9/16
38220	3/4Dr Hex ImSkt 5/8
38224	3/4Dr Hex ImSkt 3/4
38226	3/4Dr Hex ImSkt 13/16
38228	3/4Dr Hex ImSkt 7/8
38232	3/4Dr Hex ImSkt 1
38238	3/4Dr Hex ImSkt 1 1/8
38240	3/4Dr Hex ImSkt 1 1/4
3840-100-10-SC-1P	BiRecipBL 4 10TPI
3840-100-18-SC-1P	BiRecipBL 4 18TPI
3840-100-24-ST-1P	BiRecipBL 4 24TPI U-Thg
3840-100-6-ST-1P	BiRecipBL 4 6TPI U-Thg
3840-150-10-ST-1P	BiRecipBL 6 10TPI U-Thg
3840-150-14-ST-1P	BiRecipBL 6 14TPI U-Thg
3840-150-18-ST-1P	BiRecipBL 6 18TPI U-Thg
3840-150-24-ST-1P	BiRecipBL 6 24TPI U-Thg
3840-150-5/8-SL-1P	BiRecipBL 6 5/8TPI
3840-150-7-SL-1P	BiRecipBL 6 7TPI
396-LAP	Fldg Saw Bmd 8 7TPI
40000	1/4x6 GsktScpr BmdHdl
40052	QckBl AutoUtKnife5pk 025
40058	Fldg Ut Knife
40072	QckBl DispBulk 100pk 025
40150	Tel Pick-Up Tl BmdHdl
40201	4pc MiniPick/Hook BmdHdl
40221	12 Strap WR
40251	4pc Ut Tl Set BmdHdl
42302	Std Seat Creeper
43605	Tube Ctr 1-1/8
43618	Pl Hose Ctr
4559-24	Bolt Ctr Cmf Grs 24
471	Adj Hk Spner 3/4 To 2
472	Adj Hk Spner 1-1/4 To 3
474	Adj Hk Spner 2 To 4-3/4
4-102	1/2Dr Imp Ext 3-1/2
4-105A	1/2Dr Imp Ext 5
4-110A	1/2Dr Imp Ext10
4-140B	1/2Dr Imp U-Joint
4-2A	1/2Dr Imp ADpr1/2 Fx3/8
40639	1/2Dr Imp ADpr1/2 Fx3/4
4-612	1/2Dr ImSkt6pt 3/8
4-614	1/2Dr ImSkt6pt7/16
4-616	1/2Dr ImSkt6pt1/2
4-618	1/2Dr ImSkt6pt9/16
4-620	1/2Dr ImSkt6pt5/8
4-622	1/2Dr ImSkt6pt11/16
4-624	1/2Dr ImSkt6pt3/4
4-626	1/2Dr ImSkt6pt13/16
4-628	1/2Dr ImSkt6pt7/8
4-630	1/2Dr ImSkt6pt15/16
4-632	1/2Dr ImSkt6pt1
4-634	1/2Dr ImSkt6pt1-1/16
4-636	1/2Dr ImSkt6pt1-1/8
4-638	1/2Dr ImSkt6pt1-3/16
4-640	1/2Dr ImSkt6pt1-1/4
4-642	1/2Dr ImSkt6pt1-5/16
4-644	1/2Dr ImSkt6pt1-3/8
4-646	1/2Dr ImSkt6pt1-7/16
4-648	1/2Dr ImSkt6pt1-1/2
625	Scrp1 TripleW/Hlstr
625-DROP	Drop-Shape Bl625 Scrp
625-PEAR	Pear-Shape Bl625 Scrp
625-RD	RD Bl625 Scrp
665	Scrp2-1/2 Dble Bl
8223	Adj Joint Pls 8
8225	Adj Joint Pls 12
860114	Bi Hksw Bl 12 18TPI
87079	10 Ton Manmaster Gear Set
9031RUS	Blkx-Wide Adj WR 8
9070RPUS	Blk Adj/Pipe WR 6
9072RPUS	Blk Adj/Pipe WR 10
9-12-51/3806-KP	Bws w/Bws & Hack Bl
9-467-00-0-0	File Cleaner
B-101	3/8Dr Ext 1 1/2
B-108	3/8Dr Ext 3
B-110	3/8Dr Ext 6
B-115	3/8Dr Ext 11
B-118	3/8Dr Ext 18
B-1208	Skt12pt 1/4
B-1210	Skt12pt 5/16
B-1212	Skt12pt 3/8
B-1214	Skt12pt 7/16
B-1216	Skt12pt 1/2
B-1218	Skt12pt 9/16
B-1220	Skt12pt 5/8
B-1222	Skt12pt 11/16
B-1224	Skt12pt 3/4
B-1226	Skt12pt 13/16
B-1228	Skt12pt 7/8
B-1230	Skt12pt 15/16
B-1232	Skt12pt 1
B-140A	3/8Dr U-Joint
B-15	3/8Dr Speeder
B-20A	3/8Dr Sliding T Hdle
B-40A	3/8Dr FlHdl
B-52EHA	3/8Dr Encl Hd Rat 8
B-52EHLA	3/8Dr Encl Hd Rat 10-3/4
B-70	Chr Ratchet Spinner
BA-10A	Sh HexBtSkt 5/16
BA-10A-3P	3/8Dr Ph Skt 3-Pt
BA-10A-3S	3/8Dr SlSkt 9/32x045
BA-10A-4S	3/8Dr SlSkt 5/16x055
BA-10HBA	Bl HexBtSkt 5/16
BA-10LA	Lg HexBtSkt 5/16
BA-12A	Sh HexBtSkt 3/8
BA-12A-4P	3/8Dr Ph Skt 4-Pt
BA-12HBA	Bl HexBtSkt 3/8
BA-12LA	Lg HexBtSkt 3/8
BA-4A	Sh HexBtSkt 1/8
BA-4HBA	Bl HexBtSkt 1/8
BA-4LA	Lg HexBtSkt 1/8
BA-5A	Sh HexBtSkt 5/32
BA-5A-1S	3/8Dr SlSkt 3/16x032
BA-5HBA	Bl HexBtSkt 5/32
BA-5LA	Lg HexBtSkt 5/32
BA-6A	Sh HexBtSkt 3/16

Contents: Mega Set Fractional WSC-960SAE (con't)

Product Code	Description
BA-6HBA	Bl HexBtSkt 3/16
BA-6LA	Lg HexBtSkt 3/16
BA-7A	Sh HexBtSkt 7/32
BA-7A-1P	3/8Dr Ph Skt 1-Pt
BA-7A-2P	3/8Dr Ph Skt 2-Pt
BA-7A-2S	3/8Dr SlSkt 7/32x040
BA-7HBA	Bl HexBtSkt 7/32
BA-7LA	Lg HexBtSkt 7/32
BA-8A	Sh HexBtSkt 1/4
BA-8HBA	Bl HexBtSkt 1/4
BA-8LA	Lg HexBtSkt 1/4
BD-1208	Dp Skt12pt 1/4
BD-1210	Dp Skt12pt 5/16
BD-1212	Dp Skt12pt 3/8
BD-1214	Dp Skt12pt 7/16
BD-1216	Dp Skt12pt 1/2
BD-1218	Dp Skt12pt 9/16
BD-1220	Dp Skt12pt 5/8
BD-1222	Dp Skt12pt 11/16
BD-1224	Dp Skt12pt 3/4
BD-1226	Dp Skt12pt 13/16
BD-1228	Dp Skt12pt 7/8
BD-1230	Dp Skt12pt 15/16
BD-1232	Dp Skt12pt 1
BD-808	3/8Dr Skt 8-Pt 1/4
BD-810	3/8Dr Skt 8-Pt 5/16
BD-812	3/8Dr Skt 8-Pt 3/8
BD-814	3/8Dr Skt 8-Pt 7/16
BD-816	3/8Dr Skt 8-Pt 1/2
BD-818	3/8Dr Skt 8-Pt 9/16
BD-820	3/8Dr Skt 8-Pt 5/8
BFE-8	3/8Dr Flible Ext 8
BHMD-30	3/8Dr Hd ImpDrr
BS-05B	3/8Dr ADpr1/2 Fx3/8 M Blk
BS-12B	3/8Dr ADpr1/2 Fx3/8 M Blk
BU-1212	U-Skt12pt 3/8
BU-1214	U-Skt12pt 7/16
BU-1216	U-Skt12pt 1/2
BU-1218	U-Skt12pt 9/16
BU-1220	U-Skt12pt 5/8
BU-1222	U-Skt12pt 11/16
BU-1224	U-Skt12pt 3/4
BWM-0810	DblHd 10°Ofs BxWR 8x10
BWM-1113	DblHd 10°Ofs BxWR 11x013
BWM-1214	DblHd 10°Ofs BxWR 12x14
BWM-1415	DblHd 10°Ofs BxWR 14x15
BWM-1618	DblHd 10°Ofs BxWR 16x18
BWM-1719	DblHd 10°Ofs BxWR 17x19
BWM-1922	DblHd 10°Ofs BxWR 19x22
BWM-2124	DblHd 10°Ofs BxWR 21x24
BWM-2730	DblHd 10°Ofs BxWR 27x30
BWM-3032	DblHd 10°Ofs BxWR 30x32
C-10	Cd Chs 5 StSz 5/16
C-12	Cd Chs 5-1/4 StSz 5/16
C-16	Cd Chs 6 StSz 3/8
C-20	Cd Chs 6-1/2 StSz 1/2
C-24	Cd Chs 7 StSz 5/8
C-28	Cd Chs 7-1/2 StSz 3/8
C-32	Cd Chs 8 StSz 7/8
C-36	Cd Chs 8 StSz 7/8
C-715	RlBr 1/2 StSz 15-1/8
C-718	RlBr 5/8 StSz 18
C-8	Cd Chs 4-3/4 StSz 1/4
C-80A	Pch Bar 3/4 StSz 24
C-82A	Pch Bar 3/4 StSz 18
CC-404C	C-Cl Cpr Scr 4
CC-406C	C-Cl Cpr Scr 6
CW-4	Chain Wr
Ex-21A	ExtrDrill Sz 1/8
Ex-21B	ExtrDrill Sz 3/16
Ex-22A	ExtrDrill Sz 7/32
Ex-24A	ExtrDrill Sz 5/16
Ex-25A	ExtrDrill Sz 15/32
Ex-25B	ExtrDrill Sz 3/8
Ex-26A	ExtrDrill Sz 9/16
Ex-28	ExtrDrill Sz 21/32
Ex-29	ExtrDrill Sz 13/16
GS-1	Master Feeler Gauge Set
GSC-12	GsktScpr-8-3/4x1 1/2
H-104	3/4Dr Ext 3
H-110	3/4Dr Ext 8
H-115	3/4Dr Ext 16
H-1224	3/4Dr Skt12pt 3/4
H-1226	3/4Dr Skt12pt 13/16
H-1228	3/4Dr Skt12pt 7/8
H-1230	3/4Dr Skt12pt 15/16
H-1232	3/4Dr Skt12pt 1
H-1234	3/4Dr Skt12pt 1-1/16
H-1236	3/4Dr Skt12pt 1-1/8
H-1238	3/4Dr Skt12pt 1-3/16
H-1240	3/4Dr Skt12pt 1-1/4
H-1242	3/4Dr Skt12pt 1-5/16
H-1244	3/4Dr Skt12pt 1-3/8
H-1246	3/4Dr Skt12pt 1-7/16
H-1248	3/4Dr Skt12pt 1-1/2
H-1250	3/4Dr Skt12pt 1-9/16
H-1252	3/4Dr Skt12pt 1-5/8
H-1254	3/4Dr Skt12pt 1-11/16
H-1256	3/4Dr Skt12pt 1-3/4
H-1258	3/4Dr Skt12pt 1-13/16
H-1260	3/4Dr Skt12pt 1-7/8
H-1264	3/4Dr Skt12pt 2
H-1266	3/4Dr Skt12pt 2-1/16
H-1268	3/4Dr Skt12pt 2-1/8
H-1270	3/4Dr Skt12pt 2-3/16
H-1272	3/4Dr Skt12pt 2-1/4
H-1274	3/4Dr Skt12pt 2-5/16
H-1276	3/4Dr Skt12pt 2-3/8
H-140A	3/4Dr U-Joint
H-20A	3/4Dr Sliding T Hdle
H-41AA	3/4Dr FlHdl Chr22-1/8
H-51AB1	3/4Dr Ratchet 24-11/16
HNx-130	3/4Dr ADp 3/4 Fx1 M
HNx-131	3/4Dr ADp 3/4 Mx1 F
HSB-25	Brass Hmr 2-1/2 Lb
HSB-4	Brass Hmr 4 Lb
HSF-152A	Hmr Body 1-1/4 Lb 1-1/2
HSF-15N	Hmr Tip Med Hard 1-1/2
HSF-15S	Hmr Tip Soft 1-1/2
HSF-15xH	Hmr Tip Extra Hard1-1/2
JHW-16	Deadblow Hmr16oz
JHW-32	Deadblow Hmr32oz
M-102	1/4DrExt2
M-104	1/4DrExt4
M-106A	1/4DrSpinner Hdle
M-110	1/4DrExt 10
M-115	1/4DrExt6
M-140A	1/4DrU-Joint
M-15A	1/4DrSpeeder
M-20A	1/4DrSliding T Hdle
M-42A	1/4DrFlHdl
M-52EHA	1/4Dr Encl Hd Ratchet 5
M-605	Skt6pt 5/32
M-606	Skt6pt 3/16
M-607	Skt6pt 7/32
M-608	Skt6pt 1/4
M-609	Skt6pt 9/32
M-610	Skt6pt 5/16
M-611	Skt6pt 11/32
M-612	Skt6pt 3/8
M-614	Skt6pt 7/16
M-616	Skt6pt 1/2
M-618	Skt6pt 9/16
M-808	1/4Dr Skt 8-Pt 1/4
M-810	1/4Dr Skt 8-Pt 5/16
M-812	1/4Dr Skt 8-Pt 3/8
MA-10A	1/4Dr HexBtSkt 5/16
MA-2-1/2A	1/4Dr HexBtSkt 5/64
MA-2A	1/4Dr HexBtSkt 1/16
MA-3-1/2A	1/4Dr HexBtSkt 7/64
MA-3A	1/4Dr HexBtSkt 3/32
MA-45SA	1/4Dr 9/64x-S HexBtSkt
MA-4-1/2A	1/4Dr HexBtSkt 9/64
MA-4A	1/4Dr HexBtSkt 1/8
MA-4SA	1/4Dr 1/8x-Sh HexBtSkt
MA-5A	1/4Dr HexBtSkt 5/32
MA-5SA	1/4Dr 5/32x-S HexBtSkt
MA-6A	1/4Dr HexBtSkt 3/16
MA-6SA	1/4Dr 3/16x-Sh HexBtSkt
MA-7A	1/4Dr HexBtSkt 7/32
MA-8A	1/4Dr HexBtSkt 1/4
MFE-6	1/4Dr Flible Ext 6
MWS-27	Hex Key Set 11-Pcs
MWS-30	RatBxWR Set 5-Pc
MWS-31	OE Wr Set 10-Pc
MWS-47	Hex Key Set 7-Pcs
O-471	Adj Pin Spner 3/4 To 2
O-472	Adj Pin Spner 1-1/4 To 3
OES-0607	Dbl Oe WR 3/16x7/32Sh
OES-0809	Dbl Oe WR 1/4x9/32Sht
OES-1011	Dbl Oe WR 5/16x11/32S
OES-1214	Dbl Oe WR 3/8x7/16Sht
OES-1618	Dbl Oe WR 1/2x9/16Sht
P-10	Pinpch 7 StSz 1/2
P-13	Sldpch 4-1/2 StSz 5/16
P-14	Sldpch 4-1/2 StSz 5/16
P-15	Sldpch 5 StSz 3/8
P-16	Sldpch 5 StSz 3/8
P-17	Sldpch 6 StSz 1/2
P-25	LgTprPch 8-1/2 StSz 1/2
P-26	LgTprPch 9 StSz 1/2
P-28	LgTprPch 11 StSz 5/8
P-3	Pinpch 4-3/4 StSz 5/16
P-30	Prickpch 5 StSz 3/8
P-4	Pinpch 5 StSz 5/16
P-40	Centerpch 5 StSz 3/8
P-42	Centerpch 6 StSz 1/2
P-5	Pinpch 5-1/4 StSz 5/16
P-6	Pinpch 5-1/2 StSz 5/16
P-8	Pinpch 7 StSz 3/8
PL1519C	Superjoint Pls 5
PL-1515	Lck Rg Pls8
PL-1600C	Snap Rg Pls & Tips Set
PL-533	Fixed Tip Ret Rg Pl-Ext
PL-534	Fixed Tip Ret Rg Pl-Ext
PLS-6A	General Service Pls Set
RB-1214	Rat Chr 6pt 3/8x7/16
RB-1618	Rat Chr 6pt 1/2x9/16
RB-2022	Rat Chr 12pt 5/8x11/16
RB-2428	Rat Chr 12pt 3/4x7/8
RB-810	Rat Chr 6pt 1/4x5/16
S-102P	1/2Dr Ext2
S-10A	1/2Dr Speeder 13-5/8
S-110P	1/2Dr Ext5
S-115P	1/2Dr Ext10
S-121P	1/2Dr Ext20
S-140A	1/2DrU-Joint
S-15A	1/2Dr Speeder 18-1/16
S-20A	1/2Dr Sliding T Hdle
S-40AA	1/2Dr FlHdl 10-7/16
S-41AA	1/2Dr FlHdl 15-1/2
S-52EH	1/2Dr Encl Hd Rat 10-3/8
S-52EHL	1/2Dr Encl Hd Rat 15
S-60D	1/2Dr Stud Remover
S-70	1/2Dr Ratchet Spinner
SA-10A	HexBtSkt 5/16
SA-10A-3P	1/2Dr Ph Skt 3-Pt
SA-10A-3S	1/2Dr SlBitSkt 23/64x061
SA-10LA	Lg HexBtSkt 5/16
SA-12A	HexBtSkt 3/8
SA-12A-4P	1/2Dr Ph Skt 4-Pt
SA-12A-4S	1/2Dr SlBitSkt27/64x075
SA-12LA	Lg HexBtSkt 3/8
SA-16A	HexBtSkt 1/2
SA-16LA	Lg HexBtSkt 1/2
SA-18A	HexBtSkt 9/16
SA-18LA	Lg HexBtSkt 9/16
SA-20A	HexBtSkt 5/8
SA-20LA	Lg HexBtSkt 5/8
SA-8A	HexBtSkt 1/4
SA-8LA	Lg HexBtSkt 1/4
SB-30	1/2DrDragLnk Skt 1-1/2
SB-40	1/2DrDragLnk Skt 1-9/16
SB-40AA	1/2Dr FlHdl 10-13/16 Blk
SH-130	1/2Dr ADp 1/2 Fx3/4 M
SS-20	SQ Shank Scr Sl 3
SS-24	SQ Shank Scr Sl 4
SS-26	SQ Shank Scr Sl 6
SS-28	SQ Shank Scr Sl 8
SS-33	SQ Shank Scr Sl 12
SS-62	SQ Shank Scr Sl Stby
ST-1212	1/2Dr Std12ptSkt 3/8
ST-1214	1/2Dr Std12ptSkt 7/16
ST-1216	1/2Dr Std12ptSkt 1/2
ST-1218	1/2Dr Std12ptSkt 9/16
ST-1219	1/2Dr Std12ptSkt 19/32
ST-1220	1/2Dr Std12ptSkt 5/8
ST-1221	1/2Dr Std12ptSkt 21/32
ST-1222	1/2Dr Std12ptSkt 11/16
ST-1224	1/2Dr Std12ptSkt 3/4
ST-1225	1/2Dr Std12ptSkt 25/32
ST-1226	1/2Dr Std12ptSkt 13/16
ST-1228	1/2Dr Std12ptSkt 7/8
ST-1230	1/2Dr Std12ptSkt 15/16
ST-1231	1/2Dr Std12ptSkt 31/32
ST-1232	1/2Dr Std12ptSkt 1
ST-1234	1/2Dr Std12ptSkt 1 1/16
ST-1236	1/2Dr Std12ptSkt 1 1/8
ST-1238	1/2Dr Std12ptSkt 1 3/16
ST-1240	1/2Dr Std12ptSkt 1 1/4
ST-1242	1/2Dr Std12ptSkt 1 5/16
ST-1244	1/2Dr Std12ptSkt 1 3/8
ST-1246	1/2Dr Std12ptSkt 1 7/16
ST-1248	1/2Dr Std12ptSkt 1 1/2
ST-812	1/2Dr Std8ptSkt 3/8
ST-814	1/2Dr Std8ptSkt 7/16
ST-816	1/2Dr Std8ptSkt 1/2
ST-818	1/2Dr Std8ptSkt 9/16
ST-820	1/2Dr Std8ptSkt 5/8
ST-822	1/2Dr Std8ptSkt 11/16
ST-824	1/2Dr Std8ptSkt 3/4
ST-826	1/2Dr Std8ptSkt 13/16
ST-828	1/2Dr Std8ptSkt 7/8
ST-830	1/2Dr Std8ptSkt 15/16
ST-832	1/2Dr Std8ptSkt 1
ST-834	1/2Dr Std8ptSkt 1 1/16
ST-836	1/2Dr Std8ptSkt 1 1/8
ST-840	1/2Dr Std8ptSkt 1 1/4
ST-840	1/2Dr Std8ptSkt 1 1/4
WRS-1	Rat Scrr
WRST1	T Hdle Rat Scdr Stby
WS-44	Hex Key Set 13-Pcs
WS-45	Hex Key Set 8-Pcs
WS-7707	BxWR Set 7-Pc
WTC-11	Wire Twister/Ctr 8-1/2

Contents: Mega Set Metric WSC-960MM

Refer to Master Set Section for Photo and Description

Product Code	Description
1002MFRMH	3/8Dr Cl Trq Wr 100 F-Lb
10111	Hex Key Set Sh 11-Pc
10213	Hex Key Set Lg 13-Pc
10650	FL NUT WR 9x11 mm
10652	FL NUT WR 10x12 mm
10654	FL NUT WR 13x14 mm
10656	FL NUT WR 15x17 mm
10658	FL NUT WR 19x21 mm
11710	Stby Comb WRe Set 10 mm
11712	Stby Comb WRe Set 12 mm
11713	Stby Comb WRe Set 13 mm
11714	Stby Comb WRe Set 14 mm
11715	Stby Comb WRe Set 15 mm
11717	Stby Comb WRe Set 17 mm
11718	Stby Comb WRe Set 18 mm
1206MRC	6mm Rat Comb Wr
1207MSC	WRChrSat12pt 7mm
1208MRC	Rev Rat Comb WR 8 mm
1208MSC	WRChrSat12pt 8mm
1208RC	1/4 Rat Comb Wr
1209MRC	Rev Rat Comb WR 9 mm
1209MSC	WRChrSat12pt 9mm
1210MRC	Rev Rat Comb WR 10 mm
1210MSC	WRChrSat12pt 10mm
1211MRC	Rev Rat Comb WR 11 mm
1211MSC	WRChrSat12pt 11mm
1212MRC	Rev Rat Comb WR 12 mm
1212MSC	WRChrSat12pt 12mm
1213MRC	Rev Rat Comb WR 13 mm
1213MSC	WRChrSat12pt 13mm
1214MRC	Rev Rat Comb WR 14 mm
1214MSC	WRChrSat12pt 14mm
1215MRC	Rev Rat Comb WR 15 mm
1215MSC	WRChrSat12pt 15mm
1216MRC	Rev Rat Comb WR 16 mm

Contents: Mega Set Metric WSC-960MM (con't)

Product Code	Description
1217MRC	Rev Rat Comb WR 17 mm
1217MSC	WRChrSat12pt 17mm
1218MRC	Rev Rat Comb WR 18 mm
1218MSC	WRChrSat12pt 18 mm
1219MRC	Rev Rat Comb WR 19 mm
1219MSC	WRChrSat12pt 19 mm
1221MSC	WRChrSat12pt 21 mm
1222MSC	WRChrSat12pt 22 mm
1224MSC	WRChrSat12pt 24 mm
1227MSC	WRChrSat12pt 27 mm
1230MSC	WRChrSat12pt 30 mm
1232MSC	WRChrSat12pt 32 mm
1234MSC	WRChrSat12pt 34 mm
1236MSC	WRChrSat12pt 36 mm
12M-607	3/8Dr DpImSkt6pt 7mm
12M-608	3/8Dr DpImSkt6pt 8mm
12M-609	3/8Dr DpImSkt6pt 9mm
12M-610	3/8Dr DpImSkt6pt 10M
12M-611	3/8Dr DpImSkt6pt 11M
12M-612	3/8Dr DpImSkt6pt 12M
12M-613	3/8Dr DpImSkt6pt 13M
12M-614	3/8Dr DpImSkt6pt 14M
12M-615	3/8Dr DpImSkt6pt 15M
12M-616	3/8Dr DpImSkt6pt 16M
12M-617	3/8Dr DpImSkt6pt 17M
12M-618	3/8Dr DpImSkt6pt 18M
12M-619	3/8Dr DpImSkt6pt 19M
12M-620	3/8Dr DpImSkt6pt 20M
12M-621	3/8Dr DpImSkt6pt 21M
12M-622	3/8Dr DpImSkt6pt 22M
12M-623	3/8Dr DpImSkt6pt 23M
12M-624	3/8Dr DpImSkt6pt 24M
1-100-04-3-2	4 Hd SM File w/PlHdl
1-100-08-1-2	8 Hd BST File w/Hdle
1-100-08-2-2	8 Hd 2ND File w/Hdle
1-111-04-3-2	4 WRD SM File w/PlHdl
1-160-04-3-2	4 SQ SM File w/PlHdl
1-160-08-1-2	8 SQ BST File w/Hdle
1-170-04-3-2	4 3 SQ SM File w/PlHdl
1-210-04-3-2	4 1/2RD SM File w/PlHdl
1-210-08-1-2	8 1/2RD BST File w/Hdle
1-230-04-3-2	4 RD SM File w/PlHdl
1-230-08-1-2	8 RD BST File w/Hdle
20401	20oz FG Crv Claw Hmr
20544	16oz Bl PN FG Hdle Hmr
20545	24oz Bl PN FG Hdle Hmr
20651	48oz CrPN FG LgHdl Hmr
20678	32ozDrilling FG Hdle Hmr
208	Mini Hksw Alum Hdle 10
21661	2pc PryBar BmdHdl
23082	2pc Ret Rg Pls Set
23101	6-1/4 Sl Jt Pl
23103	9-3/4 Sl Jt Pl
23107	15-3/4 Gr Jt Pl 9 Pos
23152	Sd-Cut Comb Pls -8
23201	CrvJaw w/Ctr LckPl 5
23202	CrvJaw w/Ctr LckPl 7
23203	CrvJaw w/Ctr LckPl 10
23301	CrvJaw wire Ctr LckPl 5
23302	CrvJaw wire Ctr LckPl 7
23305	Str Jaw LckPl 10
23310	Lg Ns wire Ctr LckPls 9
23320	Lck C-Cl LckPl 6
23503	FrEnd Strip-Cut/Crimper
23506	Heavy Duty Stripper/Ctr
23535	Cg Super Stripper 20-30
23541	Elec Mini-Ctr 5-1/2
23542	Elec Mini-Stripper 5-1/2
23543	Elec Mini-Crimper 5-1/2
23602	8 Lnms BmdHdl
23603	9 Lnms Dipped Hdles
23604	5-1/2 Diag Cut BmdHdl
23607	8 Diag Cut BmdHdl
23609	6-1/4 Bent Nose BmdHdl
23610	5-1/2 Lg Ns BmdHdl
23612	8 Lg Ns BmdHdl
23702	Alligator Pl 6
23704	Alligator Pl 7 1/2
23706	Alligator Pl 9 1/2
24201	Cab Scr 1/8x4
24205	Sl Scr 3/16x4
24207	Cab Scr 3/16x3
24211	Cab Scr 3/16x6
24213	Cab Scr 3/16x10
24217	Sl Scr 1/4x1 1/2
24219	Sl Scr 1/4x4
24237	Sl Scr 5/16x6
24239	5/16x8 Rd Sl Bmd Hdle
24241	Sl Scr 3/8x8
24243	3/8x12 Rd Sl Bmd Hdle
24249	Ph Scr # 1x3
24251	Ph Scr # 2x1 1/2
24253	Ph Scr # 2x4
24259	#3x6 Ph Bmd Hdle
24263	Torx Scr T10x4
24265	Torx Scr T15x4
24267	Torx Scr T20x4
24269	Torx Scr T25x4
24271	Torx Scr T27x4
24273	Torx Scr T30x4
24401	3/16 Csh Gr Ntdrv
24403	1/4 Csh Gr Ntdrv
24405	5/16 Csh Gr Ntdrv
24407	11/32 Csh Gr Ntdrv
2503MFRMH	1/2Dr Cl Trq Wr 250 F-Lb
2653-9	Lnms'S Pl Comf Gr 9 -1/2
28201	Av Snips Left
28203	Av Snips Right
28205	Av Snips Str
2-02B	3/8Dr Imp Ext 3
2-103A	3/8Dr Imp Ext 3
2-106A	3/8Dr Imp Ext 6
2-140B	3/8Dr Imp Uni Joint
2-4A	3/8Dr Imp ADptr3/8Fx1/2M
2M-607	Std ImSkt6pt 7 mm
2M-608	Std ImSkt6pt 8 mm
2M-609	Std ImSkt6pt 9 mm
2M-610	Std ImSkt6pt 10 mm
2M-611	Std ImSkt6pt 11 mm
2M-612	Std ImSkt6pt 12 mm
2M-613	Std ImSkt6pt 13 mm
2M-614	Std ImSkt6pt 14 mm
2M-615	Std ImSkt6pt 15 mm
2M-616	Std ImSkt6pt 16 mm
2M-617	Std ImSkt6pt 17 mm
2M-618	Std ImSkt6pt 18 mm
2M-619	Std ImSkt6pt 19 mm
30009	1/4 Fx3/8 M Adapter
300-14-F15/16-HP	TIBx Saw Pl14 15TPI
31008	3/8 Fx1/4 M Adapter
31009	3/8 Fx1/2 M Adapter
325	Prof Hksw Hdle 12
35040	1/4Dr ScrBt Skt Sl 5/32
35041	1/4Dr ScrBt Skt Sl 7/32
35042	1/4Dr ScrBt Skt Sl 9/32
35050	1/4Dr ScrBt Skt Ph # 0
35051	1/4Dr ScrBt Skt Ph # 1
35052	1/4Dr ScrBt Skt Ph # 2
35080	1/4Dr Torx Bit Skt T10
35081	1/4Dr Torx Bit Skt T15
35082	1/4Dr Torx Bit Skt T20
35083	1/4Dr Torx Bit Skt T25
35084	1/4Dr Torx Bit Skt T27
35085	1/4Dr Torx Bit Skt T30
35182	3/8Dr Torx Bit Skt T25
35183	3/8Dr Torx Bit Skt T27
35184	3/8Dr Torx Bit Skt T30
35185	3/8Dr Torx Bit Skt T40
35186	3/8Dr Torx Bit Skt T45
35187	3/8Dr Torx Bit Skt T47
35188	3/8Dr Torx Bit Skt T50
3816-300	Tung Carbide Hksw Bl 12
3840-100-10-SC-1P	BiRecipBL 4 10TPI
3840-100-18-SC-1P	BiRecipBL 4 18TPI
3840-100-24-ST-1P	BiRecipBL 4 24TPI U-Thg
3840-100-6-ST-1P	BiRecipBL 4 6TPI U-Thg
3840-150-10-ST-1P	BiRecipBL 6 10TPI U-Thg
3840-150-14-ST-1P	BiRecipBL 6 14TPI U-Thg
3840-150-18-ST-1P	BiRecipBL 6 18TPI U-Thg
3840-150-24-ST-1P	BiRecipBL 6 24TPI U-Thg
3840-150-5/8-SL-1P	BiRecipBL 6 5/8TPI
3840-150-7-SL-1P	BiRecipBL 6 7TPI
396-LAP	Fldg Saw Bmd 8 7TPI
40000	1/4x6 GsktScpr BmdHdl
40052	QckBl AutoUtKnife5pk 025
40058	Fldg Ut Knife
40072	QckBl DispBulk 100pk 025
40150	Tel Pick-Up Tl BmdHdl
40201	4pc MiniPick/Hook BmdHdl
40221	12 Strap WR
40251	4pc Ut Tl Set BmdHdl
42302	Std Seat Creeper
43605	Tube Ctr 1-1/8
43618	Pl Hose Ctr
4559-24	Bolt Ctr Cmf Grs 24
471	Adj Hk Spner 3/4 To 2
472	Adj Hk Spner 1-1/4 To 3
474	Adj Hk Spner 2 To 4-3/4
4-102	1/2Dr Imp Ext 3-1/2
4-105A	1/2Dr Imp Ext 5
4-110A	1/2Dr Imp Ext 10
4-140B	1/2Dr Imp U-Joint
4-2A	1/2Dr Imp ADpr1/2 Fx3/8
6-Apr	1/2Dr Imp ADpr1/2 Fx3/4
4M-610	1/2Dr ImSkt6pt 10mm
4M-611	1/2Dr ImSkt6pt 11mm
4M-612	1/2Dr ImSkt6pt 12mm
4M-613	1/2Dr ImSkt6pt 13mm
4M-614	1/2Dr ImSkt6pt 14mm
4M-615	1/2Dr ImSkt6pt 15mm
4M-616	1/2Dr ImSkt6pt 16mm
4M-617	1/2Dr ImSkt6pt 17mm
4M-618	1/2Dr ImSkt6pt 18mm
4M-619	1/2Dr ImSkt6pt 19mm
4M-620	1/2Dr ImSkt6pt 20mm
4M-621	1/2Dr ImSkt6pt 21mm
4M-622	1/2Dr ImSkt6pt 22mm
4M-623	1/2Dr ImSkt6pt 23mm
4M-624	1/2Dr ImSkt6pt 24mm
4M-625	1/2Dr ImSkt6pt 25mm
4M-626	1/2Dr ImSkt6pt 26mm
4M-627	1/2Dr ImSkt6pt 27mm
4M-629	1/2Dr ImSkt6pt 29mm
4M-630	1/2Dr ImSkt6pt 30mm
4M-632	1/2Dr ImSkt6pt 32M
4M-634	1/2Dr ImSkt6pt 34mm
4M-636	1/2Dr ImSkt6pt 36mm
625	Scrp1 TripleW/Hlstr
625-DROP	Drop-Shape Bl 625 Scrp
625-PEAR	Pear-Shape Bl 625 Scrp
625-RD	RD Bl 625 Scrp
665	Scrp2-1/2 Dble Bl
8223	Adj Joint Pls 8
8225	Adj Joint Pls 12
860114	Bi Hksw Bl 12 18TPI
87079	10 Ton Manmaster Gear Set
9031RUS	Blkx-Wide Adj WR 8
9070RPUS	Blk Adj/Pipe WR 6
9072RPUS	Blk Adj/Pipe WR 10
9-12-51/3806-KP	Bws w/Bws & Hack Bl
9-467-00-0-0	File Cleaner
B-101	3/8Dr Ext 1 1/2
B-108	3/8Dr Ext 3
B-110	3/8Dr Ext 6
B-115	3/8Dr Ext 11
B-118	3/8Dr Ext 18
B-140A	3/8Dr U-Joint
B-15	3/8Dr Speeder
B-20A	3/8Dr Sliding T Hdle
B-40A	3/8Dr FlHdl
B-52EHA	3/8Dr Encl Hd Rat 8
B-52EHLA	3/8Dr Encl Hd Rat 10-3/4
B-70	Chr Ratchet Spinner
BFE-8	3/8Dr Flible Ext 8
BHMD-30	3/8Dr Hd ImpDrr
BM-1206	6 mm 3/8Dr Std12pt Skt
BM-1207	7 mm 3/8Dr Std12pt Skt
BM-1208	8 mm 3/8Dr Std12pt Skt
BM-1209	9 mm 3/8Dr Std12pt Skt
BM-1210	10 mm 3/8Dr Std12pt Skt
BM-1210	10 mm 3/8Dr Std12pt Skt
BM-1211	11 mm 3/8Dr Std12pt Skt
BM-1212	12 mm 3/8Dr Std12pt Skt
BM-1213	13 mm 3/8Dr Std12pt Skt
BM-1214	14 mm 3/8Dr Std12pt Skt
BM-1215	15 mm 3/8Dr Std12pt Skt
BM-1216	16 mm 3/8Dr Std12pt Skt
BM-1217	17 mm 3/8Dr Std12pt Skt
BM-1218	18 mm 3/8Dr Std12pt Skt
BM-1219	19 mm 3/8Dr Std12pt Skt
BM-1220	20 mm 3/8Dr Std12pt Skt
BM-1221	21 mm 3/8Dr Std12pt Skt
BM-1222	22 mm 3/8Dr Std12pt Skt
BM-1223	23 mm 3/8Dr Std12pt Skt
BM-1224	24 mm 3/8Dr Std12pt Skt
BM-1226	26 mm 3/8Dr Std12pt Skt
BS-05B	3/8Dr ADpr1/2 Fx3/8 M Blk
BS-12B	3/8Dr ADpr1/2 Fx3/8 M Blk
BWM-0810	DblHd 10°Ofs BxWR 8x10
BWM-1113	DblHd 10°Ofs BxWR 11x013
BWM-1214	DblHd 10°Ofs BxWR 12x14
BWM-1415	DblHd 10°Ofs BxWR 14x15
BWM-1618	DblHd 10°Ofs BxWR 16x18
BWM-1719	DblHd 10°Ofs BxWR 17x19
BWM-1922	DblHd 10°Ofs BxWR 19x22
BWM-2124	DblHd 10°Ofs BxWR 21x24
BWM-2730	DblHd 10°Ofs BxWR 27x30
BWM-3032	DblHd 10°Ofs BxWR 30x32
C-10	Cd Chs 5 StSz 5/16
C-12	Cd Chs 5-1/4 StSz 5/16
C-16	Cd Chs 6 StSz 3/8
C-20	Cd Chs 6-1/2 StSz 1/2
C-24	Cd Chs 7 StSz 5/8
C-28	Cd Chs 7-1/2 StSz 3/8
C-32	Cd Chs 8 StSz 7/8
C-36	Cd Chs 8 StSz 7/8
C-715	RlBr 1/2 StSz 15-1/8
C-718	RlBr 5/8 StSz 18
C-8	Cd Chs 4-3/4 StSz 1/4
C-80A	Pch Bar 3/4 StSz 24
C-82A	Pch Bar 3/4 StSz 18
CC-404C	C-Cl Cpr Scr 4
CC-406C	C-Cl Cpr Scr 6
CW-4	Chain Wr
GS-1	Master Feeler Gauge Set
GSC-12	GsktScpr-8-3/4x1 1/2
H-104	3/4Dr Ext 3
H-110	3/4Dr Ext 8
H-115	3/4Dr Ext 16
H-140A	3/4Dr U-Joint
H-20A	3/4Dr Sliding T Hdle
H-41AA	3/4Dr FlHdl Chr22-1/8
H-51AB1	3/4Dr Ratchet 24-11/16
HNx-130	3/4Dr ADp 3/4 Fx1 M
HNx-131	3/4Dr ADp 3/4 Mx1 F
HSB-25	Brass Hmr 2-1/2 Lb
HSB-4	Brass Hmr 4 Lb
HSF-152A	Hmr Body 1-1/4 Lb 1-1/2
HSF-15N	Hmr Tip Med Hard 1-1/2
HSF-15S	Hmr Tip Soft 1-1/2
HSF-15xH	Hmr Tip Extra Hard1-1/2
JHW-16	Deadblow Hmr 16oz
JHW-32	Deadblow Hmr 32oz
M-102	1/4Dr Ext 2
M-104	1/4Dr Ext 4
M-106A	1/4Dr Spinner Hdle
M-110	1/4Dr Ext 10
M-115	1/4Dr Ext 6
M-140A	1/4Dr U-Joint
M-15A	1/4Dr Speeder
M-20A	1/4Dr Sliding T Hdle
M-42A	1/4Dr FlHdl
M-52EHA	1/4Dr Encl Hd Ratchet 5
MFE-6	1/4Dr Flible Ext 6
MM-604	Mm Skt6pt 4mm
MM-605	Mm Skt6pt 5mm
MM-6055	Mm Skt6pt 55mm
MM-606	Mm Skt6pt 6mm
MM-607	Mm Skt6pt 7mm
MM-608	Mm Skt6pt 8mm
MM-609	Mm Skt6pt 9mm
MM-610	Mm Skt6pt 10mm
MM-611	Mm Skt6pt 11mm
MM-612	Mm Skt6pt 12mm
MM-613	Mm Skt6pt 13mm
MM-614	Mm Skt6pt 14mm
MWS-27	Hex Key Set 11-Pcs
MWS-30	RatBxWR Set 5-Pc
MWS-31	OE Wr Set 10-Pc
MWS-47	Hex Key Set 7-Pcs
O-471	Adj Pin Spner 3/4 To 2
O-472	Adj Pin Spner 1-1/4 To 3
P-10	Pinpch 7 StSz 1/2
P-13	Sldpch 4-1/2 StSz 5/16
P-14	Sldpch 4-1/2 StSz 5/16
P-15	Sldpch 5 StSz 3/8
P-16	Sldpch 5 StSz 3/8
P-17	Sldpch 6 StSz 1/2
P-25	LgTprPch 8-1/2 StSz 1/2
P-26	LgTprPch 9 StSz 1/2
P-28	LgTprPch 11 StSz 5/8
P-3	Pinpch 4-3/4 StSz 5/16
P-30	Prickpch 5 StSz 3/8
P-4	Pinpch 5 StSz 5/16
P-40	Centerpch 5 StSz 3/8
P-42	Centerpch 6 StSz 1/2
P-5	Pinpch 5-1/4 StSz 5/16
P-6	Pinpch 5-1/2 StSz 5/16
P-8	Pinpch 7 StSz 3/8
PL1519C	Superjoint Pls 5
PL-1515	Lck Rg Pls 8
PL-1600C	Snap Rg Pls & Tips Set
PL-533	Fixed Tip Ret Rg Pl-Ext
PL-534	Fixed Tip Ret Rg Pl-Ext
PLS-6A	General Service Pls Set
S-102P	1/2Dr Ext 2
S-10A	1/2Dr Speeder 13-5/8
S-110P	1/2Dr Ext 5
S-115P	1/2Dr Ext 10
S-121P	1/2Dr Ext 20
S-140A	1/2Dr U-Joint
S-15A	1/2Dr Speeder 18-1/16
S-20A	1/2Dr Sliding T Hdle
S-40AA	1/2Dr FlHdl 10-7/16
S-41AA	1/2Dr FlHdl 15-1/2
S-52EH	1/2Dr Encl Hd Rat 10-3/8
S-52EHL	1/2Dr Encl Hd Rat 15
S-60D	1/2Dr Stud Remover
S-70	1/2Dr Ratchet Spinner
SB-30	1/2DrDragLnk Skt 1-1/2

Contents: Mega Set Metric WSC-960MM (con't)

Product Code	Description
SB-40	1/2DrDragLnk Skt 1-9/16
SB-40AA	1/2Dr FlHdl 10-13/16 Blk
SH-130	1/2Dr ADp 1/2 Fx3/4 M
SS-20	SQ Shank Scr Sl 3
SS-24	SQ Shank Scr Sl 4
SS-26	SQ Shank Scr Sl 6
SS-28	SQ Shank Scr Sl 8
SS-33	SQ Shank Scr Sl 12
SS-62	SQ Shank Scr Sl Stby
STM-1210	1/2Dr Skt12pt 10mm
STM-1211	1/2Dr Skt12pt 11mm
STM-1212	1/2Dr Skt12pt 12mm
STM-1213	1/2Dr Skt12pt 13mm
STM-1214	1/2Dr Skt12pt 14mm
STM-1215	1/2Dr Skt12pt 15mm
STM-1216	1/2Dr Skt12pt 16mm
STM-1217	1/2Dr Skt12pt 17mm
STM-1218	1/2Dr Skt12pt 18mm
STM-1219	1/2Dr Skt12pt 19mm
STM-1220	1/2Dr Skt12pt 20mm
STM-1221	1/2Dr Skt12pt 21mm
STM-1222	1/2Dr Skt12pt 22mm
STM-1223	1/2Dr Skt12pt 23mm
STM-1224	1/2Dr Skt12pt 24mm
STM-1225	1/2Dr Skt12pt 25mm
STM-1226	1/2Dr Skt12pt 26mm
STM-1227	1/2Dr Skt12pt 27mm
STM-1228	1/2Dr Skt12pt 28mm
STM-1229	1/2Dr Skt12pt 29mm
STM-1230	1/2Dr Skt12pt 30mm
STM-1232	1/2Dr Skt12pt 32mm
STM-1234	1/2Dr Skt12pt 34mm
STM-1236	1/2Dr Skt12pt 36mm
WRS-1	Rat Scrr
WRST1	T Hdle Rat Scdr Stby

Contents: Maxxum Set WSC-680TB

Refer to Master Set Section for Photo and Description

Note: WSC-680 Includes All Tools Only, Without Tool Storage Cabinets

Product Code	Description
1002MFRMH	3/8Dr Cl Trq Wr 100 F-Lb
10111	Hex Key Set Sh 11-Pc
10213	Hex Key Set Lg 13-Pc
1020	OE Wr 1/4x5/16
1033C	OE Wr 15/16x1
1037B	OE Wr 1-1/8x1-3/16
1037	OE Wr 1-1/16x1-1/4
10600	DblHd FL WR 3/8x7/16
10602	DblHd FL WR 1/2x9/16
10604	DblHd FL WR 5/8x11/16
10606	DblHd FL WR 3/4x7/8
10650	FL NUT WR 9x11 mm
10652	FL NUT WR 10x12 mm
10654	FL NUT WR 13x14 mm
10656	FL NUT WR 15x17 mm
10658	FL NUT WR 19x21 mm
1112	Min OE WRChrSat 3/16
1113	Min OE WRChrSat 13/64
1114	Min OE WRChrSat 7/32
1115	Min OE WRChrSat 15/64
1116	Min OE WRChrSat 1/4
1118	Min OE WRChrSat 9/32
1120	Min OE WRChrSat 5/16
1122	Min OE WRChrSat 11/32
1124	Min OE WRChrSat 3/8
1128	Min OE WRChrSat 7/16
1132	Min OE WRChrSat 1/2
1136	Min OE WRChrSat 9/16
1140	Min OE WRChrSat 5/8
11920	Fl Hd SQDr 3/8x1/2
11900	Fl Hd Comb WR 3/8
11901	Fl Hd Comb WR 7/16
11902	Fl Hd Comb WR 1/2
11903	Fl Hd Comb WR 9/16
11904	Fl Hd Comb WR 5/8
11905	Fl Hd Comb WR 11/16
11906	Fl Hd Comb WR 3/4
11952	Ofs Comb WR 3/8
11953	Ofs Comb WR 7/16
11954	Ofs Comb WR 1/2
11955	Ofs Comb WR 9/16
11956	Ofs Comb WR 5/8
11957	Ofs Comb WR 11/16
11958	Ofs Comb WR 3/4
11959	Ofs Comb WR 13/16
11960	Ofs Comb WR 7/8
1207MSC	WRChrSat12pt 7mm
1208MSC	WRChrSat12pt 8mm
1209MSC	WRChrSat12pt 9mm
1206MRC	6mm Rat Comb Wr
1208RC	1/4 Rat Comb Wr
1208MRC	Rev Rat Comb WR 8 mm
1209MRC	Rev Rat Comb WR 9 mm
1210MSC	WRChrSat12pt 10mm
1211MSC	WRChrSat12pt 11mm
1212MSC	WRChrSat12pt 12mm
1213MSC	WRChrSat12pt 13mm
1214MSC	WRChrSat12pt 14mm
1215MSC	WRChrSat12pt 15mm
1217MSC	WRChrSat12pt 17mm
1218MSC	WRChrSat12pt 18 mm
1219MSC	WRChrSat12pt 19 mm
1210SC	WRChrSat12pt 5/16
1212SC	WRChrSat12pt 3/8
1214SC	WRChrSat12pt 7/16
1216SC	WRChrSat12pt 1/2
1218SC	WRChrSat12pt 9/16
1210MRC	Rev Rat Comb WR 10 mm
1211MRC	Rev Rat Comb WR 11 mm
1212MRC	Rev Rat Comb WR 12 mm
1213MRC	Rev Rat Comb WR 13 mm
1214MRC	Rev Rat Comb WR 14 mm
1215MRC	Rev Rat Comb WR 15 mm
1216MRC	Rev Rat Comb WR 16 mm
1217MRC	Rev Rat Comb WR 17 mm
1218MRC	Rev Rat Comb WR 18 mm
1219MRC	Rev Rat Comb WR 19 mm
1210RC	Rev Rat Comb WR 5/16
1212RC	Rev Rat Comb WR 3/8
1214RC	Rev Rat Comb WR 7/16
1216RC	Rev Rat Comb WR 1/2
1218RC	Rev Rat Comb WR 9/16
1221MSC	WRChrSat12pt 21 mm
1222MSC	WRChrSat12pt 22 mm
1224MSC	WRChrSat12pt 24 mm
1227MSC	WRChrSat12pt 27 mm
1220SC	WRChrSat12pt 5/8
1222SC	WRChrSat12pt 11/16
1224SC	WRChrSat12pt 3/4
1226SC	WRChrSat12pt 13/16
1228SC	WRChrSat12pt 7/8
1220RC	Rev Rat Comb WR 5/8
1222RC	Rev Rat Comb WR 11/16
1224RC	Rev Rat Comb WR 3/4
1230MSC	WRChrSat12pt 30 mm
1232MSC	WRChrSat12pt 32 mm
1234MSC	WRChrSat12pt 34 mm
1236MSC	WRChrSat12pt 36 mm
1230SC	WRChrSat12pt 15/16
1232SC	WRChrSat12pt 1
1234SC	WRChrSat12pt 1-1/16
1236SC	WRChrSat12pt 1-1/8
1240SC	WRChrSat12pt 1-1/4
12-610	3/8Dr DplmSkt6pt 5/16
12-612	3/8Dr DplmSkt6pt 3/8
12-614	3/8Dr DplmSkt6pt 7/16
12-616	3/8Dr DplmSkt6pt 1/2
12-618	3/8Dr DplmSkt6pt 9/16
12-620	3/8Dr DplmSkt6pt 5/8
12-622	3/8Dr DplmSkt6pt 11/16
12-624	3/8Dr DplmSkt6pt 3/4
12-626	3/8Dr DplmSkt6pt 13/16
12-628	3/8Dr DplmSkt6pt 7/8
12-630	3/8Dr DplmSkt6pt 15/16
12-632	3/8Dr DplmSkt6pt 1
13406	Chr Adj WRes 6
13408	Chr Adj WRes 8
13410	Chr Adj WRes 10
13412	Chr Adj WRes 12
13418	18 Chr Adj Wr Pol Hd
13518	Cast Iron Pipe WR 8
13522	Cast Iron Pipe WR 12
13526	Cast Iron Pipe WR 18
14-612	1/2Dr DplmSkt6pt 3/8
14-614	1/2Dr DplmSkt6pt 7/16
14-616	1/2Dr DplmSkt6pt 1/2
14-618	1/2Dr DplmSkt6pt 9/16
14-620	1/2Dr DplmSkt6pt 5/8
14-622	1/2Dr DplmSkt6pt11/16
14-624	1/2Dr DplmSkt6pt 3/4
14-626	1/2Dr DplmSkt6pt13/16
14-628	1/2Dr DplmSkt6pt 7/8
14-630	1/2Dr DplmSkt6pt15/16
14-632	1/2Dr DplmSkt6pt 1
14-634	1/2Dr DplmSkt6pt 1-1/16
14-636	1/2Dr DplmSkt6pt 1-1/8
14-638	1/2Dr DplmSkt6pt 1-3/16
14-640	1/2Dr DplmSkt6pt 1-1/4
14-642	1/2Dr DplmSkt6pt 1-5/16
14-644	1/2Dr DplmSkt6pt 1-3/8
14-646	1/2Dr DplmSkt6pt 1-7/16
14-648	1/2Dr DplmSkt6pt 1-1/2
1723	OE Wr 3/8x7/16
1725	OE Wr 7/16x1/2
1725B	OE Wr 1/2x9/16
1727	OE Wr 9/16x5/8
1729B	OE Wr 11/16x3/4
1731B	OE Wr 13/16x7/8
1-100-04-3-2	4 Hd SM File w/PlHdl
1-111-04-3-2	4 WRD SM File w/PlHdl
1-160-04-3-2	4 SQ SM File w/PlHdl
1-170-04-3-2	4 3 SQ SM File w/PlHdl
1-100-08-1-2	8 Hd BST File w/Hdle
1-100-08-2-2	8 Hd 2ND File w/Hdle
1-160-08-1-2	8 SQ BST File w/Hdle
1-210-04-3-2	4 1/2RD SM File w/PlHdl
1-230-04-3-2	4 RD SM File w/PlHdl
1-210-08-1-2	8 1/2RD BST File w/Hdle
1-230-08-1-2	8 RD BST File w/Hdle
20401	20oz FG Crv Claw Hmr
20544	16oz Bl PN FG Hdle Hmr
20545	24oz Bl PN FG Hdle Hmr
20651	48oz CrPN FG LgHdl Hmr
20678	32ozDrilling FG Hdle Hmr
21661	2pc PryBar BmdHdl
23082	2pc Ret Rg Pls Set
23101	6-1/4 Sl Jt Pl
23103	9-3/4 Sl Jt Pl
23201	CrvJaw w/Ctr LckPl 5
23202	CrvJaw w/Ctr LckPl 7
23203	CrvJaw w/Ctr LckPl 10
23301	CrvJaw wire Ctr LckPl 5
23302	CrvJaw wire Ctr LckPl 7
23305	Str Jaw LckPl 10
23310	Lg Ns wire Ctr LckPls 9
23320	Lck C-Cl LckPl 6
23503	FrEnd Strip-Cut/Crimper
23506	Heavy Duty Stripper/Ctr
23535	Cg Super Stripper 20-30
23604	5-1/2 Diag Cut BmdHdl
23607	8 Diag Cut BmdHdl
23609	6-1/4 Bent Nose BmdHdl
23610	5-1/2 Lg Ns BmdHdl
23612	8 Lg Ns BmdHdl
23702	Alligator Pl 6
23704	Alligator Pl 7 1/2
23706	Alligator Pl 9 1/2
24201	Cab Scr 1/8x4
24207	Cab Scr 3/16x3
24211	Cab Scr 3/16x6
24213	Cab Scr 3/16x10
24205	Sl Scr 3/16x4
24217	Sl Scr 1/4x1 1/2
24219	Sl Scr 1/4x4
24237	Sl Scr 5/16x6
24241	Sl Scr 3/8x8
24249	Ph Scr # 1x3
24251	Ph Scr # 2x1 1/2
24253	Ph Scr # 2x4
24263	Torx Scr T10x4
24265	Torx Scr T15x4
24267	Torx Scr T20x4
24269	Torx Scr T25x4
24271	Torx Scr T27x4
24273	Torx Scr T30x4
24239	5/16x8 Rd Sl Bmd Hdle
24243	3/8x12 Rd Sl Bmd Hdle
24259	#3x6 Ph Bmd Hdle
24401	3/16 Csh Gr Ntdrv
24403	1/4 Csh Gr Ntdrv
24405	5/16 Csh Gr Ntdrv
24407	11/32 Csh Gr Ntdrv
2503MFRMH	1/2Dr Cl Trq Wr 250 F-Lb
2653-9	Lnms'S Pl Comf Gr 9 -1/2
28201	Av Snips Left
28203	Av Snips Right
28205	Av Snips Str
2-02B	3/8Dr Imp Ext 3
2-103A	3/8Dr Imp Ext 3
2-106A	3/8Dr Imp Ext 6
2-140B	3/8Dr Imp Uni Joint
2-4A	3/8Dr Imp ADptr3/8Fx1/2M
2-608	3/8Dr ImSkt6pt 1/4
2-610	3/8Dr ImSkt6pt 5/16
2-612	3/8Dr ImSkt6pt 3/8
2-614	3/8Dr ImSkt6pt 7/16
2-616	3/8Dr ImSkt6pt 1/2
2-618	3/8Dr ImSkt6pt 9/16
2-620	3/8Dr ImSkt6pt 5/8
2-622	3/8Dr ImSkt6pt 11/1
2-624	3/8Dr ImSkt6pt 3/4
2-626	3/8Dr ImSkt6pt 13/1
2-628	3/8Dr ImSkt6pt 7/8
2-630	3/8Dr ImSkt6pt 15/1
2-632	3/8Dr ImSkt6pt 1
2M-607	Std ImSkt6pt 7 mm
2M-608	Std ImSkt6pt 8 mm
2M-609	Std ImSkt6pt 9 mm
2M-610	Std ImSkt6pt 10 mm
2M-611	Std ImSkt6pt 11 mm
2M-612	Std ImSkt6pt 12 mm
2M-613	Std ImSkt6pt 13 mm
2M-614	Std ImSkt6pt 14 mm
2M-615	Std ImSkt6pt 15 mm
2M-616	Std ImSkt6pt 16 mm
2M-617	Std ImSkt6pt 17 mm
2M-618	Std ImSkt6pt 18 mm
2M-619	Std ImSkt6pt 19 mm
300-14-F15/16-HP	TlBx Saw Pl14 15TPI
30009	1/4 Fx3/8 M Adapter
31008	3/8 Fx1/4 M Adapter
31009	3/8 Fx1/2 M Adapter
31301	3/8Dr SpkPl Skt 5/8
31303	3/8Dr SpkPl Skt 13/16
32008	1/2 Fx3/8 M Adapter
32412	1/2Dr Skt 3/8
32414	1/2Dr Skt 7/16
32416	1/2Dr Skt 1/2
32418	1/2Dr Skt 9/16
32420	1/2Dr Skt 5/8
32422	1/2Dr Skt 11/16
32424	1/2Dr Skt 3/4
32426	1/2Dr Skt 13/16
32428	1/2Dr Skt 7/8
32430	1/2Dr Skt 15/16
32432	1/2Dr Skt 1
32434	1/2Dr Skt 1 1/16
32436	1/2Dr Skt 1 1/8
32438	1/2Dr Skt 1 3/16
32440	1/2Dr Skt 1 1/4
32448	1/2Dr Skt 1 1/2
325	Prof Hksw Hdle 12
33008	3/4F*1/2MAdapter
35182	3/8Dr Torx Bit Skt T25
35183	3/8Dr Torx Bit Skt T27
35184	3/8Dr Torx Bit Skt T30
35185	3/8Dr Torx Bit Skt T40
35186	3/8Dr Torx Bit Skt T45
35187	3/8Dr Torx Bit Skt T47
35188	3/8Dr Torx Bit Skt T50

Contents: Maxxum Set WSC-680TB (con't)

Product Code	Description
396-LAP	Fldg Saw Bmd 8 7TPI
40000	1/4x6 GsktScpr BmdHdl
40052	QckBl AutoUtKnife5pk 025
40058	Fldg Ut Knife
40150	Tel Pick-Up Tl BmdHdl
40201	4pc MiniPick/Hook BmdHdl
40221	12 Strap WR
40251	4pc Ut Tl Set BmdHdl
42302	Std Seat Creeper
43605	Tube Ctr 1-1/8
43618	Pl Hose Ctr
4559-24	Bolt Ctr Cmf Grs 24
4-102	1/2Dr Imp Ext 3-1/2
4-105A	1/2Dr Imp Ext 5
4-110A	1/2Dr Imp Ext 10
4-140B	1/2Dr Imp U-Joint
4-2A	1/2Dr Imp ADpr1/2 Fx3/8
6-Apr	1/2Dr Imp ADpr1/2 Fx3/4
4-612	1/2Dr Imp Skt6pt 3/8
4-614	1/2Dr Imp Skt6pt 7/16
4-616	1/2Dr Imp Skt6pt 1/2
4-618	1/2Dr Imp Skt6pt 9/16
4-620	1/2Dr Imp Skt6pt 5/8
4-622	1/2Dr Imp Skt6pt 11/16
4-624	1/2Dr Imp Skt6pt 3/4
4-626	1/2Dr Imp Skt6pt 13/16
4-628	1/2Dr Imp Skt6pt 7/8
4-630	1/2Dr Imp Skt6pt 15/16
4-632	1/2Dr Imp Skt6pt 1
4-634	1/2Dr Imp Skt6pt 1-1/16
4-636	1/2Dr Imp Skt6pt 1-1/8
4-638	1/2Dr Imp Skt6pt 1-3/16
4-640	1/2Dr Imp Skt6pt 1-1/4
4-642	1/2Dr Imp Skt6pt 1-5/16
4-644	1/2Dr Imp Skt6pt 1-3/8
4-646	1/2Dr Imp Skt6pt 1-7/16
4-648	1/2Dr Imp Skt6pt 1-1/2
4M-610	1/2Dr ImSkt6pt 10mm
4M-611	1/2Dr ImSkt6pt 11mm
4M-612	1/2Dr ImSkt6pt 12mm
4M-613	1/2Dr ImSkt6pt 13mm
4M-614	1/2Dr ImSkt6pt 14mm
4M-615	1/2Dr ImSkt6pt 15mm
4M-616	1/2Dr ImSkt6pt 16mm
4M-617	1/2Dr ImSkt6pt 17mm
4M-618	1/2Dr ImSkt6pt 18mm
4M-619	1/2Dr ImSkt6pt 19mm
4M-620	1/2Dr ImSkt6pt 20mm
4M-621	1/2Dr ImSkt6pt 21mm
4M-622	1/2Dr ImSkt6pt 22mm
4M-623	1/2Dr ImSkt6pt 23mm
4M-624	1/2Dr ImSkt6pt 24mm
4M-625	1/2Dr ImSkt6pt 25mm
4M-626	1/2Dr ImSkt6pt 26mm
4M-627	1/2Dr ImSkt6pt 27mm
4M-629	1/2Dr ImSkt6pt 29mm
4M-630	1/2Dr ImSkt6pt 30mm
4M-632	1/2Dr ImSkt6pt 32M
4M-634	1/2Dr ImSkt6pt 34mm
4M-636	1/2Dr ImSkt6pt 36mm
50721	3Drw 34 Cart-Rb Red
7029B	BxWRChrSat12pt 11/16x3/4
7033C	BxWRChrSat12pt 15/16x1
7723	BxWRChrSat12pt 3/8x7/16
7725B	BxWRChrSat12pt 1/2x9/16
7727A	BxWRChrSat12pt 5/8x11/16
7731A	BxWRChrSat12pt 3/4x7/8
7731B	BxWRChrSat12pt 13/16x7/8
8223	Adj Joint Pls 8
8225	Adj Joint Pls 12
860114	Bi Hksw Bl 12 18TPI
B-101	3/8Dr Ext 1 1/2
B-108	3/8Dr Ext 3
B-110	3/8Dr Ext 6
B-115	3/8Dr Ext 11
B-118	3/8Dr Ext 18
B-140A	3/8Dr U-Joint
B-15	3/8Dr Speeder
B-1208	Skt12pt 1/4
B-1210	Skt12pt 5/16
B-1212	Skt12pt 3/8
B-1214	Skt12pt 7/16
B-1216	Skt12pt 1/2
B-1218	Skt12pt 9/16
B-1220	Skt12pt 5/8
B-1222	Skt12pt 11/16
B-1224	Skt12pt 3/4
B-1226	Skt12pt 13/16
B-1228	Skt12pt 7/8
B-1230	Skt12pt 15/16
B-1232	Skt12pt 1
B-20A	3/8Dr Sliding T Hdle
B-40A	3/8Dr FlHdl
B-52EHA	3/8Dr Encl Hd Rat 8
B-52EHLA	3/8Dr Encl Hd Rat 10-3/4
B-70	Chr Ratchet Spinner
BA-4A	Sh HexBtSkt 1/8
BA-5A	Sh HexBtSkt 5/32
BA-6A	Sh HexBtSkt 3/16
BA-7A	Sh HexBtSkt 7/32
BA-8A	Sh HexBtSkt 1/4
BA-10A	Sh HexBtSkt 5/16
BA-12A	Sh HexBtSkt 3/8
BA-10A-3P	3/8Dr Ph Skt 3-Pt
BA-10A-3S	3/8Dr SlSkt 9/32x045
BA-10A-4S	3/8Dr SlSkt 5/16x055
BA-12A-4P	3/8Dr Ph Skt 4-Pt
BA-5A-1S	3/8Dr SlSkt 3/16x032
BA-7A-1P	3/8Dr Ph Skt 1-Pt
BA-7A-2P	3/8Dr Ph Skt 2-Pt
BA-7A-2S	3/8Dr SlSkt 7/32x040
BD-1208	Dp Skt12pt 1/4
BD-1210	Dp Skt12pt 5/16
BD-1212	Dp Skt12pt 3/8
BD-1214	Dp Skt12pt 7/16
BD-1216	Dp Skt12pt 1/2
BD-1218	Dp Skt12pt 9/16
BD-1220	Dp Skt12pt 5/8
BD-1222	Dp Skt12pt 11/16
BD-1224	Dp Skt12pt 3/4
BD-1226	Dp Skt12pt 13/16
BD-1228	Dp Skt12pt 7/8
BD-1230	Dp Skt12pt 15/16
BD-1232	Dp Skt12pt 1
BFE-8	3/8Dr Flible Ext 8
BHMD-30	3/8Dr Hd ImpDrr
BM-1206	6 mm 3/8Dr Std12pt Skt
BM-1207	7 mm 3/8Dr Std12pt Skt
BM-1208	8 mm 3/8Dr Std12pt Skt
BM-1209	9 mm 3/8Dr Std12pt Skt
BM-1210	10 mm 3/8Dr Std12pt Skt
BM-1210	10 mm 3/8Dr Std12pt Skt
BM-1211	11 mm 3/8Dr Std12pt Skt
BM-1212	12 mm 3/8Dr Std12pt Skt
BM-1213	13 mm 3/8Dr Std12pt Skt
BM-1214	14 mm 3/8Dr Std12pt Skt
BM-1215	15 mm 3/8Dr Std12pt Skt
BM-1216	16 mm 3/8Dr Std12pt Skt
BM-1217	17 mm 3/8Dr Std12pt Skt
BM-1218	18 mm 3/8Dr Std12pt Skt
BM-1219	19 mm 3/8Dr Std12pt Skt
BM-1220	20 mm 3/8Dr Std12pt Skt
BM-1221	21 mm 3/8Dr Std12pt Skt
BM-1222	22 mm 3/8Dr Std12pt Skt
BM-1223	23 mm 3/8Dr Std12pt Skt
BM-1224	24 mm 3/8Dr Std12pt Skt
BM-1226	26 mm 3/8Dr Std12pt Skt
C-10	Cd Chs 5 StSz 5/16
C-12	Cd Chs 5-1/4 StSz 5/16
C-16	Cd Chs 6 StSz 3/8
C-20	Cd Chs 6-1/2 StSz 1/2
C-24	Cd Chs 7 StSz 5/8
C-28	Cd Chs 7-1/2 StSz 3/8
C-32	Cd Chs 8 StSz 7/8
C-36	Cd Chs 8 StSz 7/8
C-8	Cd Chs 4-3/4 StSz 1/4
CC-404C	C-Cl Cpr Scr 4
CC-406C	C-Cl Cpr Scr 6
CW-4	Chain Wr
Ex-21A	ExtrDrill Sz 1/8
Ex-21B	ExtrDrill Sz 3/16
Ex-22A	ExtrDrill Sz 7/32
Ex-24A	ExtrDrill Sz 5/16
Ex-25B	ExtrDrill Sz 3/8
Ex-25A	ExtrDrill Sz 15/32
Ex-26A	ExtrDrill Sz 9/16
Ex-28	ExtrDrill Sz 21/32
Ex-29	ExtrDrill Sz 13/16
GS-1	Master Feeler Gauge Set
GSC-12	GsktScpr-8-3/4x1 1/2
HSB-25	Brass Hmr 2-1/2 Lb
HSF-152A	Hmr Body 1-1/4 Lb 1-1/2
HSF-15N	Hmr Tip Med Hard 1-1/2
HSF-15S	Hmr Tip Soft 1-1/2
HSF-15xH	Hmr Tip Extra Hard1-1/2
JHW-16	Deadblow Hmr 16oz
JHW-32	Deadblow Hmr 32oz
M-102	1/4Dr Ext 2
M-104	1/4Dr Ext 4
M-106A	1/4Dr Spinner Hdle
M-110	1/4Dr Ext 10
M-115	1/4Dr Ext 6
M-140A	1/4Dr U-Joint
M-15A	1/4Dr Speeder
M-20A	1/4Dr Sliding T Hdle
M-42A	1/4Dr FlHdl
M-52EHA	1/4Dr Encl Hd Ratchet 5
M-605	Skt6pt 5/32
M-606	Skt6pt 3/16
M-607	Skt6pt 7/32
M-608	Skt6pt 1/4
M-609	Skt6pt 9/32
M-610	Skt6pt 5/16
M-611	Skt6pt 11/32
M-612	Skt6pt 3/8
M-614	Skt6pt 7/16
M-616	Skt6pt 1/2
M-618	Skt6pt 9/16
MFE-6	1/4Dr Flible Ext 6
MM-604	Mm Skt6pt 4mm
MM-605	Mm Skt6pt 5mm
MM-6055	Mm Skt6pt 55mm
MM-606	Mm Skt6pt 6mm
MM-607	Mm Skt6pt 7mm
MM-608	Mm Skt6pt 8mm
MM-609	Mm Skt6pt 9mm
MM-610	Mm Skt6pt 10mm
MM-611	Mm Skt6pt 11mm
MM-612	Mm Skt6pt 12mm
MM-613	Mm Skt6pt 13mm
MM-614	Mm Skt6pt 14mm
MWS-27	Hex Key Set 11-Pcs
MWS-47	Hex Key Set 7-Pcs
P-10	Pinpch 7 StSz 1/2
P-13	Sldpch 4-1/2 StSz 5/16
P-14	Sldpch 4-1/2 StSz 5/16
P-15	Sldpch 5 StSz 3/8
P-16	Sldpch 5 StSz 3/8
P-17	Sldpch 6 StSz 1/2
P-25	LgTprPch 8-1/2 StSz 1/2
P-26	LgTprPch 9 StSz 1/2
P-28	LgTprPch 11 StSz 5/8
P-3	Pinpch 4-3/4 StSz 5/16
P-30	Prickpch 5 StSz 3/8
P-4	Pinpch 5 StSz 5/16
P-40	Centerpch 5 StSz 3/8
P-42	Centerpch 6 StSz 1/2
P-5	Pinpch 5-1/4 StSz 5/16
P-6	Pinpch 5-1/2 StSz 5/16
P-8	Pinpch 7 StSz 3/8
PL1519C	Superjoint Pls 5
PL-1515	Lck Rg Pls 8
PL-1600C	Snap Rg Pls & Tips Set
PL-533	Fixed Tip Ret Rg Pl-Ext
PL-534	Fixed Tip Ret Rg Pl-Ext
PLS-6A	General Service Pls Set
S-102P	1/2Dr Ext 2
S-10A	1/2Dr Speeder 13-5/8
S-110P	1/2Dr Ext 5
S-115P	1/2Dr Ext 10
S-121P	1/2Dr Ext 20
S-140A	1/2Dr U-Joint
S-15A	1/2Dr Speeder 18-1/16
S-20A	1/2Dr Sliding T Hdle
S-40AA	1/2Dr FlHdl 10-7/16
S-41AA	1/2Dr FlHdl 15-1/2
S-52EH	1/2Dr Encl Hd Rat 10-3/8
S-52EHL	1/2Dr Encl Hd Rat 15
S-60D	1/2Dr Stud Remover
S-70	1/2Dr Ratchet Spinner
SA-8A	HexBtSkt 1/4
SA-10A	HexBtSkt 5/16
SA-12A	HexBtSkt 3/8
SA-16A	HexBtSkt 1/2
SA-18A	HexBtSkt 9/16
SA-20A	HexBtSkt 5/8
SA-10A-3S	1/2Dr SlBitSkt
SA-12A-4S	1/2Dr SlBitSkt
SA-10A-3P	1/2Dr Ph Skt 3-Pt
SA-12A-4P	1/2Dr Ph Skt 4-Pt
SB-40AA	1/2Dr FlHdl 10-13/16 Blk
SH-130	1/2Dr ADp 1/2 Fx3/4 M
ST-1212	1/2Dr Std12ptSkt 3/8
ST-1214	1/2Dr Std12ptSkt 7/16
ST-1216	1/2Dr Std12ptSkt 1/2
ST-1218	1/2Dr Std12ptSkt 9/16
ST-1219	1/2Dr Std12ptSkt 19/32
ST-1220	1/2Dr Std12ptSkt 5/8
ST-1221	1/2Dr Std12ptSkt 21/32
ST-1222	1/2Dr Std12ptSkt 11/16
ST-1224	1/2Dr Std12ptSkt 3/4
ST-1225	1/2Dr Std12ptSkt 25/32
ST-1226	1/2Dr Std12ptSkt 13/16
ST-1228	1/2Dr Std12ptSkt 7/8
ST-1230	1/2Dr Std12ptSkt 15/16
ST-1231	1/2Dr Std12ptSkt 31/32
ST-1232	1/2Dr Std12ptSkt 1
ST-1234	1/2Dr Std12ptSkt 1 1/16
ST-1236	1/2Dr Std12ptSkt 1 1/8
ST-1238	1/2Dr Std12ptSkt 1 3/16
ST-1240	1/2Dr Std12ptSkt 1 1/4
ST-1242	1/2Dr Std12ptSkt 1 5/16
ST-1244	1/2Dr Std12ptSkt 1 3/8
ST-1246	1/2Dr Std12ptSkt 1 7/16
ST-1248	1/2Dr Std12ptSkt 1 1/2
STM-1210	1/2Dr Skt12pt 10mm
STM-1211	1/2Dr Skt12pt 11mm
STM-1212	1/2Dr Skt12pt 12mm
STM-1213	1/2Dr Skt12pt 13mm
STM-1214	1/2Dr Skt12pt 14mm
STM-1215	1/2Dr Skt12pt 15mm
STM-1216	1/2Dr Skt12pt 16mm
STM-1217	1/2Dr Skt12pt 17mm
STM-1218	1/2Dr Skt12pt 18mm
STM-1219	1/2Dr Skt12pt 19mm
STM-1220	1/2Dr Skt12pt 20mm
STM-1221	1/2Dr Skt12pt 21mm
STM-1222	1/2Dr Skt12pt 22mm
STM-1223	1/2Dr Skt12pt 23mm
STM-1224	1/2Dr Skt12pt 24mm
STM-1225	1/2Dr Skt12pt 25mm
STM-1226	1/2Dr Skt12pt 26mm
STM-1227	1/2Dr Skt12pt 27mm
STM-1228	1/2Dr Skt12pt 28mm
STM-1229	1/2Dr Skt12pt 29mm
STM-1230	1/2Dr Skt12pt 30mm
STM-1232	1/2Dr Skt12pt 32mm
STM-1234	1/2Dr Skt12pt 34mm
STM-1236	1/2Dr Skt12pt 36mm
WRS-1	Rat Scrr
WS-45	Hex Key Set 8-Pcs
W53RC6BS	53 Roll Cabinet
W53TC8	53 Top Chest

Contents: Maxxum Set Fractional WSC-680SAE

Refer to Master Set Section for Photo and Description

Product Code	Description
1002MFRMH	3/8Dr Cl Trq Wr 100 F-Lb
10111	Hex Key Set Sh 11-Pc
10213	Hex Key Set Lg 13-Pc
1020	OE Wr 1/4x5/16
1033C	OE Wr 15/16x1
1037B	OE Wr 1-1/8x1-3/16
1037	OE Wr 1-1/16x1-1/4
10600	DblHd FL WR 3/8x7/16
10602	DblHd FL WR 1/2x9/16
10604	DblHd FL WR 5/8x11/16

Contents: Maxxum Set Fractional WSC-680SAE (con't)

Product Code	Description
10606	DblHd FL WR 3/4x7/8
1112	Min OE WRChrSat 3/16
1113	Min OE WRChrSat 13/64
1114	Min OE WRChrSat 7/32
1115	Min OE WRChrSat 15/64
1116	Min OE WRChrSat 1/4
1118	Min OE WRChrSat 9/32
1120	Min OE WRChrSat 5/16
1122	Min OE WRChrSat 11/32
1124	Min OE WRChrSat 3/8
1128	Min OE WRChrSat 7/16
1132	Min OE WRChrSat 1/2
1136	Min OE WRChrSat 9/16
1140	Min OE WRChrSat 5/8
11900	Fl Hd Comb WR 3/8
11901	Fl Hd Comb WR 7/16
11902	Fl Hd Comb WR 1/2
11903	Fl Hd Comb WR 9/16
11904	Fl Hd Comb WR 5/8
11905	Fl Hd Comb WR 11/16
11906	Fl Hd Comb WR 3/4
11952	Ofs Comb WR 3/8
11953	Ofs Comb WR 7/16
11954	Ofs Comb WR 1/2
11955	Ofs Comb WR 9/16
11956	Ofs Comb WR 5/8
11957	Ofs Comb WR 11/16
11958	Ofs Comb WR 3/4
11959	Ofs Comb WR 13/16
11960	Ofs Comb WR 7/8
11920	Fl Hd SQDr 3/8x1/2
1206MRC	6mm Rat Comb Wr
1208RC	1/4 Rat Comb Wr
1210SC	WRChrSat12pt 5/16
1212SC	WRChrSat12pt 3/8
1214SC	WRChrSat12pt 7/16
1216SC	WRChrSat12pt 1/2
1218SC	WRChrSat12pt 9/16
1210RC	Rev Rat Comb WR 5/16
1212RC	Rev Rat Comb WR 3/8
1214RC	Rev Rat Comb WR 7/16
1216RC	Rev Rat Comb WR 1/2
1218RC	Rev Rat Comb WR 9/16
1220SC	WRChrSat12pt 5/8
1222SC	WRChrSat12pt 11/16
1224SC	WRChrSat12pt 3/4
1226SC	WRChrSat12pt 13/16
1228SC	WRChrSat12pt 7/8
1220RC	Rev Rat Comb WR 5/8
1222RC	Rev Rat Comb WR 11/16
1224RC	Rev Rat Comb WR 3/4
1230SC	WRChrSat12pt 15/16
1232SC	WRChrSat12pt 1
1234SC	WRChrSat12pt 1-1/16
1236SC	WRChrSat12pt 1-1/8
1240SC	WRChrSat12pt 1-1/4
12-610	3/8Dr DplmSkt6pt 5/16
12-612	3/8Dr DplmSkt6pt 3/8
12-614	3/8Dr DplmSkt6pt 7/16
12-616	3/8Dr DplmSkt6pt 1/2
12-618	3/8Dr DplmSkt6pt 9/16
12-620	3/8Dr DplmSkt6pt 5/8
12-622	3/8Dr DplmSkt6pt 11/16
12-624	3/8Dr DplmSkt6pt 3/4
12-626	3/8Dr DplmSkt6pt 13/16
12-628	3/8Dr DplmSkt6pt 7/8
12-630	3/8Dr DplmSkt6pt 15/16
12-632	3/8Dr DplmSkt6pt 1
13406	Chr Adj WRes 6
13408	Chr Adj WRes 8
13410	Chr Adj WRes 10
13412	Chr Adj WRes 12
13418	18 Chr Adj Wr Pol Hd
13518	Cast Iron Pipe WR 8
13522	Cast Iron Pipe WR 12
13526	Cast Iron Pipe WR 18
14-612	1/2Dr DplmSkt6pt 3/8
14-614	1/2Dr DplmSkt6pt 7/16
14-616	1/2Dr DplmSkt6pt 1/2
14-618	1/2Dr DplmSkt6pt 9/16
14-620	1/2Dr DplmSkt6pt 5/8
14-622	1/2Dr DplmSkt6pt11/16
14-624	1/2Dr DplmSkt6pt 3/4
14-626	1/2Dr DplmSkt6pt13/16
14-628	1/2Dr DplmSkt6pt 7/8
14-630	1/2Dr DplmSkt6pt15/16
14-632	1/2Dr DplmSkt6pt 1
14-634	1/2Dr DplmSkt6pt 1-1/16
14-636	1/2Dr DplmSkt6pt 1-1/8
14-638	1/2Dr DplmSkt6pt 1-3/16
14-640	1/2Dr DplmSkt6pt 1-1/4
14-642	1/2Dr DplmSkt6pt 1-5/16
14-644	1/2Dr DplmSkt6pt 1-3/8
14-646	1/2Dr DplmSkt6pt 1-7/16
14-648	1/2Dr DplmSkt6pt 1-1/2
1723	OE Wr 3/8x7/16
1725	OE Wr 7/16x1/2
1725B	OE Wr 1/2x9/16
1727	OE Wr 9/16x5/8
1729B	OE Wr 11/16x3/4
1731B	OE Wr 13/16x7/8
1-100-04-3-2	4 Hd SM File w/PlHdl
1-111-04-3-2	4 WRD SM File w/PlHdl
1-160-04-3-2	4 SQ SM File w/PlHdl
1-170-04-3-2	4 3 SQ SM File w/PlHdl
1-100-08-1-2	8 Hd BST File w/Hdle
1-100-08-2-2	8 Hd 2ND File w/Hdle
1-160-08-1-2	8 SQ BST File w/Hdle
1-210-04-3-2	4 1/2RD SM File w/PlHdl
1-230-04-3-2	4 RD SM File w/PlHdl
1-210-08-1-2	8 1/2RD BST File w/Hdle
1-230-08-1-2	8 RD BST File w/Hdle
20401	20oz FG Crv Claw Hmr
20544	16oz Bl PN FG Hdle Hmr
20545	24oz Bl PN FG Hdle Hmr
20651	48oz CrPN FG LgHdl Hmr
20678	32ozDrilling FG Hdle Hmr
21661	2pc PryBar BmdHdl
23082	2pc Ret Rg Pls Set
23101	6-1/4 Sl Jt Pl
23103	9-3/4 Sl Jt Pl
23201	CrvJaw w/Ctr LckPl 5
23202	CrvJaw w/Ctr LckPl 7
23203	CrvJaw w/Ctr LckPl 10
23301	CrvJaw wire Ctr LckPl 5
23302	CrvJaw wire Ctr LckPl 7
23305	Str Jaw LckPl 10
23310	Lg Ns wire Ctr LckPls 9
23320	Lck C-Cl LckPl 6
23503	FrEnd Strip-Cut/Crimper
23506	Heavy Duty Stripper/Ctr
23535	Cg Super Stripper 20-30
23604	5-1/2 Diag Cut BmdHdl
23607	8 Diag Cut BmdHdl
23609	6-1/4 Bent Nose BmdHdl
23610	5-1/2 Lg Ns BmdHdl
23612	8 Lg Ns BmdHdl
23702	Alligator Pl 6
23704	Alligator Pl 7 1/2
23706	Alligator Pl 9 1/2
24201	Cab Scr 1/8x4
24207	Cab Scr 3/16x3
24211	Cab Scr 3/16x6
24213	Cab Scr 3/16x10
24205	Sl Scr 3/16x4
24217	Sl Scr 1/4x1 1/2
24219	Sl Scr 1/4x4
24237	Sl Scr 5/16x6
24241	Sl Scr 3/8x8
24249	Ph Scr # 1x3
24251	Ph Scr # 2x1 1/2
24253	Ph Scr # 2x4
24263	Torx Scr T10x4
24265	Torx Scr T15x4
24267	Torx Scr T20x4
24269	Torx Scr T25x4
24271	Torx Scr T27x4
24273	Torx Scr T30x4
24239	5/16x8 Rd Sl Bmd Hdle
24243	3/8x12 Rd Sl Bmd Hdle
24259	#3x6 Ph Bmd Hdle
24401	3/16 Csh Gr Ntdrv
24403	1/4 Csh Gr Ntdrv
24405	5/16 Csh Gr Ntdrv
24407	11/32 Csh Gr Ntdrv
2503MFRMH	1/2Dr Cl Trq Wr 250 F-Lb
2653-9	Lnms'S Pl Comf Gr 9 -1/2
28201	Av Snips Left
28203	Av Snips Right
28205	Av Snips Str
2-02B	3/8Dr Imp Ext 3
2-103A	3/8Dr Imp Ext 3
2-106A	3/8Dr Imp Ext 6
2-140B	3/8Dr Imp Uni Joint
2-4A	3/8Dr Imp ADptr3/8Fx1/2M
2-608	3/8Dr ImSkt6pt 1/4
2-610	3/8Dr ImSkt6pt 5/16
2-612	3/8Dr ImSkt6pt 3/8
2-614	3/8Dr ImSkt6pt 7/16
2-616	3/8Dr ImSkt6pt 1/2
2-618	3/8Dr ImSkt6pt 9/16
2-620	3/8Dr ImSkt6pt 5/8
2-622	3/8Dr ImSkt6pt 11/1
2-624	3/8Dr ImSkt6pt 3/4
2-626	3/8Dr ImSkt6pt 13/1
2-628	3/8Dr ImSkt6pt 7/8
2-630	3/8Dr ImSkt6pt 15/1
2-632	3/8Dr ImSkt6pt 1
300-14-F15/16-HP	TlBx Saw Pl14 15TPI
30009	1/4 Fx3/8 M Adapter
31008	3/8 Fx1/4 M Adapter
31009	3/8 Fx1/2 M Adapter
31301	3/8Dr SpkPl Skt 5/8
31303	3/8Dr SpkPl Skt 13/16
32008	1/2 Fx3/8 M Adapter
32412	1/2Dr Skt 3/8
32414	1/2Dr Skt 7/16
32416	1/2Dr Skt 1/2
32418	1/2Dr Skt 9/16
32420	1/2Dr Skt 5/8
32422	1/2Dr Skt 11/16
32424	1/2Dr Skt 3/4
32426	1/2Dr Skt 13/16
32428	1/2Dr Skt 7/8
32430	1/2Dr Skt 15/16
32432	1/2Dr Skt 1
32434	1/2Dr Skt 1 1/16
32436	1/2Dr Skt 1 1/8
32438	1/2Dr Skt 1 3/16
32440	1/2Dr Skt 1 1/4
32448	1/2Dr Skt 1 1/2
325	Prof Hksw Hdle 12
33008	3/4F*1/2MAdapter
35182	3/8Dr Torx Bit Skt T25
35183	3/8Dr Torx Bit Skt T27
35184	3/8Dr Torx Bit Skt T30
35185	3/8Dr Torx Bit Skt T40
35186	3/8Dr Torx Bit Skt T45
35187	3/8Dr Torx Bit Skt T47
35188	3/8Dr Torx Bit Skt T50
396-LAP	Fldg Saw Bmd 8 7TPI
40000	1/4x6 GsktScpr BmdHdl
40052	QckBl AutoUtKnife5pk 025
40058	Fldg Ut Knife
40150	Tel Pick-Up Tl BmdHdl
40201	4pc MiniPick/Hook BmdHdl
40221	12 Strap WR
40251	4pc Ut Tl Set BmdHdl
42302	Std Seat Creeper
43605	Tube Ctr 1-1/8
43618	Pl Hose Ctr
4559-24	Bolt Ctr Cmf Grs 24
4-102	1/2Dr Imp Ext 3-1/2
4-105A	1/2Dr Imp Ext 5
4-110A	1/2Dr Imp Ext 10
4-140B	1/2Dr Imp U-Joint
4-2A	1/2Dr Imp ADpr1/2 Fx3/8
6-Apr	1/2Dr Imp ADpr1/2 Fx3/4
4-612	1/2Dr Imp Skt6pt 3/8
4-614	1/2Dr Imp Skt6pt 7/16
4-616	1/2Dr Imp Skt6pt 1/2
4-618	1/2Dr Imp Skt6pt 9/16
4-620	1/2Dr Imp Skt6pt 5/8
4-622	1/2Dr Imp Skt6pt 11/16
4-624	1/2Dr Imp Skt6pt 3/4
4-626	1/2Dr Imp Skt6pt 13/16
4-628	1/2Dr Imp Skt6pt 7/8
4-630	1/2Dr Imp Skt6pt 15/16
4-632	1/2Dr Imp Skt6pt 1
4-634	1/2Dr Imp Skt6pt 1-1/16
4-636	1/2Dr Imp Skt6pt 1-1/8
4-638	1/2Dr Imp Skt6pt 1-3/16
4-640	1/2Dr Imp Skt6pt 1-1/4
4-642	1/2Dr Imp Skt6pt 1-5/16
4-644	1/2Dr Imp Skt6pt 1-3/8
4-646	1/2Dr Imp Skt6pt 1-7/16
4-648	1/2Dr Imp Skt6pt 1-1/2
7029B	BxWRChrSat12pt 11/16x3/4
7033C	BxWRChrSat12pt 15/16x1
7723	BxWRChrSat12pt 3/8x7/16
7725B	BxWRChrSat12pt 1/2x9/16
7727A	BxWRChrSat12pt 5/8x11/16
7731A	BxWRChrSat12pt 3/4x7/8
7731B	BxWRChrSat12pt 13/16x7/8
8223	Adj Joint Pls 8
8225	Adj Joint Pls 12
860114	Bi Hksw Bl 12 18TPI
B-101	3/8Dr Ext 1 1/2
B-108	3/8Dr Ext 3
B-110	3/8Dr Ext 6
B-115	3/8Dr Ext 11
B-118	3/8Dr Ext 18
B-140A	3/8Dr U-Joint
B-15	3/8Dr Speeder
B-1208	Skt12pt 1/4
B-1210	Skt12pt 5/16
B-1212	Skt12pt 3/8
B-1214	Skt12pt 7/16
B-1216	Skt12pt 1/2
B-1218	Skt12pt 9/16
B-1220	Skt12pt 5/8
B-1222	Skt12pt 11/16
B-1224	Skt12pt 3/4
B-1226	Skt12pt 13/16
B-1228	Skt12pt 7/8
B-1230	Skt12pt 15/16
B-1232	Skt12pt 1
B-20A	3/8Dr Sliding T Hdle
B-40A	3/8Dr FlHdl
B-52EHA	3/8Dr Encl Hd Rat 8
B-52EHLA	3/8Dr Encl Hd Rat 10-3/4
B-70	Chr Ratchet Spinner
BA-4A	Sh HexBtSkt 1/8
BA-5A	Sh HexBtSkt 5/32
BA-6A	Sh HexBtSkt 3/16
BA-7A	Sh HexBtSkt 7/32
BA-8A	Sh HexBtSkt 1/4
BA-10A	Sh HexBtSkt 5/16
BA-12A	Sh HexBtSkt 3/8
BA-10A-3P	3/8Dr Ph Skt 3-Pt
BA-10A-3S	3/8Dr SlSkt 9/32x045
BA-10A-4S	3/8Dr SlSkt 5/16x055
BA-12A-4P	3/8Dr Ph Skt 4-Pt
BA-5A-1S	3/8Dr SlSkt 3/16x032
BA-7A-1P	3/8Dr Ph Skt 1-Pt
BA-7A-2P	3/8Dr Ph Skt 2-Pt
BA-7A-2S	3/8Dr SlSkt 7/32x040
BD-1208	Dp Skt12pt 1/4
BD-1210	Dp Skt12pt 5/16
BD-1212	Dp Skt12pt 3/8
BD-1214	Dp Skt12pt 7/16
BD-1216	Dp Skt12pt 1/2
BD-1218	Dp Skt12pt 9/16
BD-1220	Dp Skt12pt 5/8
BD-1222	Dp Skt12pt 11/16
BD-1224	Dp Skt12pt 3/4
BD-1226	Dp Skt12pt 13/16
BD-1228	Dp Skt12pt 7/8
BD-1230	Dp Skt12pt 15/16
BD-1232	Dp Skt12pt 1
BFE-8	3/8Dr Flible Ext 8
BHMD-30	3/8Dr Hd ImpDrr
C-10	Cd Chs 5 StSz 5/16
C-12	Cd Chs 5-1/4 StSz 5/16
C-16	Cd Chs 6 StSz 3/8
C-20	Cd Chs 6-1/2 StSz 1/2
C-24	Cd Chs 7 StSz 5/8
C-28	Cd Chs 7-1/2 StSz 3/8
C-32	Cd Chs 8 StSz 7/8
C-36	Cd Chs 8 StSz 7/8
C-8	Cd Chs 4-3/4 StSz 1/4
CC-404C	C-Cl Cpr Scr 4
CC-406C	C-Cl Cpr Scr 6
CW-4	Chain Wr
Ex-21A	ExtrDrill Sz 1/8
Ex-21B	ExtrDrill Sz 3/16
Ex-22A	ExtrDrill Sz 7/32
Ex-24A	ExtrDrill Sz 5/16
Ex-25B	ExtrDrill Sz 3/8
Ex-25A	ExtrDrill Sz 15/32
Ex-26A	ExtrDrill Sz 9/16
Ex-28	ExtrDrill Sz 21/32
Ex-29	ExtrDrill Sz 13/16
GS-1	Master Feeler Gauge Set
GSC-12	GsktScpr-8-3/4x1 1/2
HSB-25	Brass Hmr 2-1/2 Lb
HSF-152A	Hmr Body 1-1/4 Lb 1-1/2
HSF-15N	Hmr Tip Med Hard 1-1/2
HSF-15S	Hmr Tip Soft 1-1/2
HSF-15xH	Hmr Tip Extra Hard1-1/2
JHW-16	Deadblow Hmr 16oz
JHW-32	Deadblow Hmr 32oz
M-102	1/4Dr Ext 2
M-104	1/4Dr Ext 4
M-106A	1/4Dr Spinner Hdle
M-110	1/4Dr Ext 10
M-115	1/4Dr Ext 6
M-140A	1/4Dr U-Joint
M-15A	1/4Dr Speeder
M-20A	1/4Dr Sliding T Hdle
M-42A	1/4Dr FlHdl
M-52EHA	1/4Dr Encl Hd Ratchet 5
M-605	Skt6pt 5/32
M-606	Skt6pt 3/16
M-607	Skt6pt 7/32
M-608	Skt6pt 1/4
M-609	Skt6pt 9/32
M-610	Skt6pt 5/16
M-611	Skt6pt 11/32
M-612	Skt6pt 3/8

Contents: Maxxum Set Fractional WSC-680SAE (con't)

Product Code	Description
M-614	Skt6pt 7/16
M-616	Skt6pt 1/2
M-618	Skt6pt 9/16
MFE-6	1/4Dr Flible Ext 6
MWS-27	Hex Key Set 11-Pcs
MWS-47	Hex Key Set 7-Pcs
P-10	Pinpch 7 StSz 1/2
P-13	Sldpch 4-1/2 StSz 5/16
P-14	Sldpch 4-1/2 StSz 5/16
P-15	Sldpch 5 StSz 3/8
P-16	Sldpch 5 StSz 3/8
P-17	Sldpch 6 StSz 1/2
P-25	LgTprPch 8-1/2 StSz 1/2
P-26	LgTprPch 9 StSz 1/2
P-28	LgTprPch 11 StSz 5/8
P-3	Pinpch 4-3/4 StSz 5/16

Product Code	Description
P-30	Prickpch 5 StSz 3/8
P-4	Pinpch 5 StSz 5/16
P-40	Centerpch 5 StSz 3/8
P-42	Centerpch 6 StSz 1/2
P-5	Pinpch 5-1/4 StSz 5/16
P-6	Pinpch 5-1/2 StSz 5/16
P-8	Pinpch 7 StSz 3/8
PL1519C	Superjoint Pls 5
PL-1515	Lck Rg Pls 8
PL-1600C	Snap Rg Pls & Tips Set
PL-533	Fixed Tip Ret Rg Pl-Ext
PL-534	Fixed Tip Ret Rg Pl-Ext
PLS-6A	General Service Pls Set
S-102P	1/2Dr Ext 2
S-10A	1/2Dr Speeder 13-5/8
S-110P	1/2Dr Ext 5

Product Code	Description
S-115P	1/2Dr Ext 10
S-121P	1/2Dr Ext 20
S-140A	1/2Dr U-Joint
S-15A	1/2Dr Speeder 18-1/16
S-20A	1/2Dr Sliding T Hdle
S-40AA	1/2Dr FlHdl 10-7/16
S-41AA	1/2Dr FlHdl 15-1/2
S-52EH	1/2Dr Encl Hd Rat 10-3/8
S-52EHL	1/2Dr Encl Hd Rat 15
S-60D	1/2Dr Stud Remover
S-70	1/2Dr Ratchet Spinner
SA-8A	HexBtSkt 1/4
SA-10A	HexBtSkt 5/16
SA-12A	HexBtSkt 3/8
SA-16A	HexBtSkt 1/2
SA-18A	HexBtSkt 9/16

Product Code	Description
SA-20A	HexBtSkt 5/8
SA-10A-3S	1/2Dr SlBitSkt
SA-12A-4S	1/2Dr SlBitSkt
SA-10A-3P	1/2Dr Ph Skt 3-Pt
SA-12A-4P	1/2Dr Ph Skt 4-Pt
SB-40AA	1/2Dr FlHdl 10-13/16 Blk
SH-130	1/2Dr ADp 1/2 Fx3/4 M
ST-1212	1/2Dr Std12ptSkt 3/8
ST-1214	1/2Dr Std12ptSkt 7/16
ST-1216	1/2Dr Std12ptSkt 1/2
ST-1218	1/2Dr Std12ptSkt 9/16
ST-1219	1/2Dr Std12ptSkt 19/32
ST-1220	1/2Dr Std12ptSkt 5/8
ST-1221	1/2Dr Std12ptSkt 21/32
ST-1222	1/2Dr Std12ptSkt 11/16
ST-1224	1/2Dr Std12ptSkt 3/4

Product Code	Description
ST-1225	1/2Dr Std12ptSkt 25/32
ST-1226	1/2Dr Std12ptSkt 13/16
ST-1228	1/2Dr Std12ptSkt 7/8
ST-1230	1/2Dr Std12ptSkt 15/16
ST-1231	1/2Dr Std12ptSkt 31/32
ST-1232	1/2Dr Std12ptSkt 1
ST-1234	1/2Dr Std12ptSkt 1 1/16
ST-1236	1/2Dr Std12ptSkt 1 1/8
ST-1238	1/2Dr Std12ptSkt 1 3/16
ST-1240	1/2Dr Std12ptSkt 1 1/4
ST-1242	1/2Dr Std12ptSkt 1 5/16
ST-1244	1/2Dr Std12ptSkt 1 3/8
ST-1246	1/2Dr Std12ptSkt 1 7/16
ST-1248	1/2Dr Std12ptSkt 1 1/2
WRS-1	Rat Scrr
WS-45	Hex Key Set 8-Pcs

Contents: Maxxum Set Metric WSC-680MM

Refer to Master Set Section for Photo and Description

Product Code	Description
1002MFRMHSS	3/8Dr Cl Trq Wr 100 F-Lb
10111	Hex Key Set Sh 11-Pc
10213	Hex Key Set Lg 13-Pc
10650	FL NUT WR 9x11 mm
10652	FL NUT WR 10x12 mm
10654	FL NUT WR 13x14 mm
10656	FL NUT WR 15x17 mm
10658	FL NUT WR 19x21 mm
1207MSC	WRChrSat12pt 7mm
1208MSC	WRChrSat12pt 8mm
1209MSC	WRChrSat12pt 9mm
1206MRC	6mm Rat Comb Wr
1208RC	1/4 Rat Comb Wr
1208MRC	Rev Rat Comb WR 8 mm
1209MRC	Rev Rat Comb WR 9 mm
1210MSC	WRChrSat12pt 10mm
1211MSC	WRChrSat12pt 11mm
1212MSC	WRChrSat12pt 12mm
1213MSC	WRChrSat12pt 13mm
1214MSC	WRChrSat12pt 14mm
1215MSC	WRChrSat12pt 15mm
1217MSC	WRChrSat12pt 17mm
1218MSC	WRChrSat12pt 18 mm
1219MSC	WRChrSat12pt 19 mm
1210MRC	Rev Rat Comb WR 10 mm
1211MRC	Rev Rat Comb WR 11 mm
1212MRC	Rev Rat Comb WR 12 mm
1213MRC	Rev Rat Comb WR 13 mm
1214MRC	Rev Rat Comb WR 14 mm
1215MRC	Rev Rat Comb WR 15 mm
1216MRC	Rev Rat Comb WR 16 mm
1217MRC	Rev Rat Comb WR 17 mm
1218MRC	Rev Rat Comb WR 18 mm
1219MRC	Rev Rat Comb WR 19 mm
1221MSC	WRChrSat12pt 21 mm
1222MSC	WRChrSat12pt 22 mm
1224MSC	WRChrSat12pt 24 mm
1227MSC	WRChrSat12pt 27 mm
1230MSC	WRChrSat12pt 30 mm
1232MSC	WRChrSat12pt 32 mm
1234MSC	WRChrSat12pt 34 mm
1236MSC	WRChrSat12pt 36 mm
1-100-04-3-2	4 Hd SM File w/PlHdl
1-111-04-3-2	4 WRD SM File w/PlHdl
1-160-04-3-2	4 SQ SM File w/PlHdl
1-170-04-3-2	4 3 SQ SM File w/PlHdl
1-100-08-1-2	8 Hd BST File w/Hdle
1-100-08-2-2	8 Hd 2ND File w/Hdle
1-160-08-1-2	8 SQ BST File w/Hdle

Product Code	Description
1-210-04-3-2	4 1/2RD SM File w/PlHdl
1-230-04-3-2	4 RD SM File w/PlHdl
1-210-08-1-2	8 1/2RD BST File w/Hdle
1-230-08-1-2	8 RD BST File w/Hdle
20401	20oz FG Crv Claw Hmr
20544	16oz Bl PN FG Hdle Hmr
20545	24oz Bl PN FG Hdle Hmr
20651	48oz CrPN FG LgHdl Hmr
20678	32ozDrilling FG Hdle Hmr
21661	2pc PryBar BmdHdl
23082	2pc Ret Rg Pls Set
23101	6-1/4 Sl Jt Pl
23103	9-3/4 Sl Jt Pl
23201	CrvJaw w/Ctr LckPl 5
23202	CrvJaw w/Ctr LckPl 7
23203	CrvJaw w/Ctr LckPl 10
23301	CrvJaw wire Ctr LckPl 5
23302	CrvJaw wire Ctr LckPl 7
23305	Str Jaw LckPl 10
23310	Lg Ns wire Ctr LckPls 9
23320	Lck C-Cl LckPl 6
23503	FrEnd Strip-Cut/Crimper
23506	Heavy Duty Stripper/Ctr
23535	Cg Super Stripper 20-30
23604	5-1/2 Diag Cut BmdHdl
23607	8 Diag Cut BmdHdl
23609	6-1/4 Bent Nose BmdHdl
23610	5-1/2 Lg Ns BmdHdl
23612	8 Lg Ns BmdHdl
23702	Alligator Pl 6
23704	Alligator Pl 7 1/2
23706	Alligator Pl 9 1/2
24201	Cab Scr 1/8x4
24207	Cab Scr 3/16x3
24211	Cab Scr 3/16x6
24213	Cab Scr 3/16x10
24205	Sl Scr 3/16x4
24217	Sl Scr 1/4x1 1/2
24219	Sl Scr 1/4x4
24237	Sl Scr 5/16x6
24241	Sl Scr 3/8x8
24249	Ph Scr # 1x3
24251	Ph Scr # 2x1 1/2
24253	Ph Scr # 2x4
24263	Torx Scr T10x4
24265	Torx Scr T15x4
24267	Torx Scr T20x4
24269	Torx Scr T25x4
24271	Torx Scr T27x4

Product Code	Description
24273	Torx Scr T30x4
24239	5/16x8 Rd Sl Bmd Hdle
24243	3/8x12 Rd Sl Bmd Hdle
24259	#3x6 Ph Bmd Hdle
24401	3/16 Csh Gr Ntdrv
24403	1/4 Csh Gr Ntdrv
24405	5/16 Csh Gr Ntdrv
24407	11/32 Csh Gr Ntdrv
2503MFRMHSS	1/2Dr Cl Trq Wr 250 F-Lb
2653-9	Lnms'S Pl Comf Gr 9 -1/2
28201	Av Snips Left
28203	Av Snips Right
28205	Av Snips Str
2-02B	3/8Dr Imp Ext 3
2-103A	3/8Dr Imp Ext 3
2-106A	3/8Dr Imp Ext 6
2-140B	3/8Dr Imp Uni Joint
2-4A	3/8Dr Imp ADptr3/8Fx1/2M
2M-607	Std ImSkt6pt 7 mm
2M-608	Std ImSkt6pt 8 mm
2M-609	Std ImSkt6pt 9 mm
2M-610	Std ImSkt6pt 10 mm
2M-611	Std ImSkt6pt 11 mm
2M-612	Std ImSkt6pt 12 mm
2M-613	Std ImSkt6pt 13 mm
2M-614	Std ImSkt6pt 14 mm
2M-615	Std ImSkt6pt 15 mm
2M-616	Std ImSkt6pt 16 mm
2M-617	Std ImSkt6pt 17 mm
2M-618	Std ImSkt6pt 18 mm
2M-619	Std ImSkt6pt 19 mm
300-14-F15/16-HP	TIBx Saw Pl14 15TPI
30009	1/4 Fx3/8 M Adapter
31008	3/8 Fx1/4 M Adapter
31009	3/8 Fx1/2 M Adapter
325	Prof Hksw Hdle 12
35182	3/8Dr Torx Bit Skt T25
35183	3/8Dr Torx Bit Skt T27
35184	3/8Dr Torx Bit Skt T30
35185	3/8Dr Torx Bit Skt T40
35186	3/8Dr Torx Bit Skt T45
35187	3/8Dr Torx Bit Skt T47
35188	3/8Dr Torx Bit Skt T50
396-LAP	Fldg Saw Bmd 8 7TPI
40000	1/4x6 GsktScpr BmdHdl
40052	QckBl AutoUtKnife5pk 025
40058	Fldg Ut Knife
40150	Tel Pick-Up Tl BmdHdl
40201	4pc MiniPick/Hook BmdHdl

Product Code	Description
40221	12 Strap WR
40251	4pc Ut Tl Set BmdHdl
42302	Std Seat Creeper
43605	Tube Ctr 1-1/8
43618	Pl Hose Ctr
4559-24	Bolt Ctr Cmf Grs 24
4-102	1/2Dr Imp Ext 3-1/2
4-105A	1/2Dr Imp Ext 5
4-110A	1/2Dr Imp Ext 10
4-140B	1/2Dr Imp U-Joint
4-2A	1/2Dr Imp ADpr1/2 Fx3/8
6-Apr	1/2Dr Imp ADpr1/2 Fx3/4
4M-610	1/2Dr ImSkt6pt 10mm
4M-611	1/2Dr ImSkt6pt 11mm
4M-612	1/2Dr ImSkt6pt 12mm
4M-613	1/2Dr ImSkt6pt 13mm
4M-614	1/2Dr ImSkt6pt 14mm
4M-615	1/2Dr ImSkt6pt 15mm
4M-616	1/2Dr ImSkt6pt 16mm
4M-617	1/2Dr ImSkt6pt 17mm
4M-618	1/2Dr ImSkt6pt 18mm
4M-619	1/2Dr ImSkt6pt 19mm
4M-620	1/2Dr ImSkt6pt 20mm
4M-621	1/2Dr ImSkt6pt 21mm
4M-622	1/2Dr ImSkt6pt 22mm
4M-623	1/2Dr ImSkt6pt 23mm
4M-624	1/2Dr ImSkt6pt 24mm
4M-625	1/2Dr ImSkt6pt 25mm
4M-626	1/2Dr ImSkt6pt 26mm
4M-627	1/2Dr ImSkt6pt 27mm
4M-629	1/2Dr ImSkt6pt 29mm
4M-630	1/2Dr ImSkt6pt 30mm
4M-632	1/2Dr ImSkt6pt 32M
4M-634	1/2Dr ImSkt6pt 34mm
4M-636	1/2Dr ImSkt6pt 36mm
8223	Adj Joint Pls 8
8225	Adj Joint Pls 12
860114	Bi Hksw Bl 12 18TPI
B-101	3/8Dr Ext 1 1/2
B-108	3/8Dr Ext 3
B-110	3/8Dr Ext 6
B-115	3/8Dr Ext 11
B-118	3/8Dr Ext 18
B-140A	3/8Dr U-Joint
B-15	3/8Dr Speeder
B-20A	3/8Dr Sliding T Hdle
B-40A	3/8Dr FlHdl
B-52EHA	3/8Dr Encl Hd Rat 8
B-52EHLA	3/8Dr Encl Hd Rat 10-3/4

Product Code	Description
B-70	Chr Ratchet Spinner
BFE-8	3/8Dr Flible Ext 8
BHMD-30	3/8Dr Hd ImpDrr
BM-1206	6 mm 3/8Dr Std12pt Skt
BM-1207	7 mm 3/8Dr Std12pt Skt
BM-1208	8 mm 3/8Dr Std12pt Skt
BM-1209	9 mm 3/8Dr Std12pt Skt
BM-1210	10 mm 3/8Dr Std12pt Skt
BM-1210	10 mm 3/8Dr Std12pt Skt
BM-1211	11 mm 3/8Dr Std12pt Skt
BM-1212	12 mm 3/8Dr Std12pt Skt
BM-1213	13 mm 3/8Dr Std12pt Skt
BM-1214	14 mm 3/8Dr Std12pt Skt
BM-1215	15 mm 3/8Dr Std12pt Skt
BM-1216	16 mm 3/8Dr Std12pt Skt
BM-1217	17 mm 3/8Dr Std12pt Skt
BM-1218	18 mm 3/8Dr Std12pt Skt
BM-1219	19 mm 3/8Dr Std12pt Skt
BM-1220	20 mm 3/8Dr Std12pt Skt
BM-1221	21 mm 3/8Dr Std12pt Skt
BM-1222	22 mm 3/8Dr Std12pt Skt
BM-1223	23 mm 3/8Dr Std12pt Skt
BM-1224	24 mm 3/8Dr Std12pt Skt
BM-1226	26 mm 3/8Dr Std12pt Skt
C-10	Cd Chs 5 StSz 5/16
C-12	Cd Chs 5-1/4 StSz 5/16
C-16	Cd Chs 6 StSz 3/8
C-20	Cd Chs 6-1/2 StSz 1/2
C-24	Cd Chs 7 StSz 5/8
C-28	Cd Chs 7-1/2 StSz 3/8
C-32	Cd Chs 8 StSz 7/8
C-36	Cd Chs 8 StSz 7/8
C-8	Cd Chs 4-3/4 StSz 1/4
CC-404C	C-Cl Cpr Scr 4
CC-406C	C-Cl Cpr Scr 6
CW-4	Chain Wr
GS-1	Master Feeler Gauge Set
GSC-12	GsktScpr-8-3/4x1 1/2
HSB-25	Brass Hmr 2-1/2 Lb
HSF-152A	Hmr Body 1-1/4 Lb 1-1/2
HSF-15N	Hmr Tip Med Hard 1-1/2
HSF-15S	Hmr Tip Soft 1-1/2
HSF-15xH	Hmr Tip Extra Hard1-1/2
JHW-16	Deadblow Hmr 16oz
JHW-32	Deadblow Hmr 32oz
M-102	1/4Dr Ext 2
M-104	1/4Dr Ext 4
M-106A	1/4Dr Spinner Hdle
M-110	1/4Dr Ext 10

Contents: Maxxum Set Metric WSC-680MM (con't)

Product Code	Description
M-115	1/4Dr Ext 6
M-140A	1/4Dr U-Joint
M-15A	1/4Dr Speeder
M-20A	1/4Dr Sliding T Hdle
M-42A	1/4Dr FlHdl
M-52EHA	1/4Dr Encl Hd Ratchet 5
MFE-6	1/4Dr Flible Ext 6
MM-604	Mm Skt6pt 4mm
MM-605	Mm Skt6pt 5mm
MM-6055	Mm Skt6pt 55mm
MM-606	Mm Skt6pt 6mm
MM-607	Mm Skt6pt 7mm
MM-608	Mm Skt6pt 8mm
MM-609	Mm Skt6pt 9mm
MM-610	Mm Skt6pt 10mm
MM-611	Mm Skt6pt 11mm
MM-612	Mm Skt6pt 12mm
MM-613	Mm Skt6pt 13mm
MM-614	Mm Skt6pt 14mm
MWS-27	Hex Key Set 11-Pcs
MWS-47	Hex Key Set 7-Pcs
P-10	Pinpch 7 StSz 1/2
P-13	Sldpch 4-1/2 StSz 5/16
P-14	Sldpch 4-1/2 StSz 5/16
P-15	Sldpch 5 StSz 3/8
P-16	Sldpch 5 StSz 3/8
P-17	Sldpch 6 StSz 1/2
P-25	LgTprPch 8-1/2 StSz 1/2
P-26	LgTprPch 9 StSz 1/2
P-28	LgTprPch 11 StSz 5/8
P-3	Pinpch 4-3/4 StSz 5/16
P-30	Prickpch 5 StSz 3/8
P-4	Pinpch 5 StSz 5/16
P-40	Centerpch 5 StSz 3/8
P-42	Centerpch 6 StSz 1/2
P-5	Pinpch 5-1/4 StSz 5/16
P-6	Pinpch 5-1/2 StSz 5/16
P-8	Pinpch 7 StSz 3/8
PL1519C	Superjoint Pls 5
PL-1515	Lck Rg Pls 8
PL-1600C	Snap Rg Pls & Tips Set
PL-533	Fixed Tip Ret Rg Pl-Ext
PL-534	Fixed Tip Ret Rg Pl-Ext
PLS-6A	General Service Pls Set
S-102P	1/2Dr Ext 2
S-10A	1/2Dr Speeder 13-5/8
S-110P	1/2Dr Ext 5
S-115P	1/2Dr Ext 10
S-121P	1/2Dr Ext 20
S-140A	1/2Dr U-Joint
S-15A	1/2Dr Speeder 18-1/16
S-20A	1/2Dr Sliding T Hdle
S-40AA	1/2Dr FlHdl 10-7/16
S-41AA	1/2Dr FlHdl 15-1/2
S-52EH	1/2Dr Encl Hd Rat 10-3/8
S-52EHL	1/2Dr Encl Hd Rat 15
S-60D	1/2Dr Stud Remover
S-70	1/2Dr Ratchet Spinner
SB-40AA	1/2Dr FlHdl 10-13/16 Blk
SH-130	1/2Dr ADp 1/2 Fx3/4 M
STM-1210	1/2Dr Skt12pt 10mm
STM-1211	1/2Dr Skt12pt 11mm
STM-1212	1/2Dr Skt12pt 12mm
STM-1213	1/2Dr Skt12pt 13mm
STM-1214	1/2Dr Skt12pt 14mm
STM-1215	1/2Dr Skt12pt 15mm
STM-1216	1/2Dr Skt12pt 16mm
STM-1217	1/2Dr Skt12pt 17mm
STM-1218	1/2Dr Skt12pt 18mm
STM-1219	1/2Dr Skt12pt 19mm
STM-1220	1/2Dr Skt12pt 20mm
STM-1221	1/2Dr Skt12pt 21mm
STM-1222	1/2Dr Skt12pt 22mm
STM-1223	1/2Dr Skt12pt 23mm
STM-1224	1/2Dr Skt12pt 24mm
STM-1225	1/2Dr Skt12pt 25mm
STM-1226	1/2Dr Skt12pt 26mm
STM-1227	1/2Dr Skt12pt 27mm
STM-1228	1/2Dr Skt12pt 28mm
STM-1229	1/2Dr Skt12pt 29mm
STM-1230	1/2Dr Skt12pt 30mm
STM-1232	1/2Dr Skt12pt 32mm
STM-1234	1/2Dr Skt12pt 34mm
STM-1236	1/2Dr Skt12pt 36mm
WRS-1	Rat Scrr

Contents: Master Maintenance Service Set WSC-352TB

Refer to Master Set Section for Photo and Description

Note: WSC-352 Includes All Tools Only, Without Tool Storage Cabinets

Product Code	Description
325	Hksw Frame
471	Adj Hk Spr 3/4 To 2
472	Adj Hk Spr 1-1/4 To 3
474	Adj Hk Spr 2 To 4-3/4
482	Adj Face Spr 2
483	Adj Face Spr 3
484	Adj Face Spr 4
625	Scraper
1020	OE WR 1/4x5/16
1037	OE WR 1-1/16x1-1/4
1038	OE WR 1-1/4x1-5/16
1242	Comb WR 12pt 1 5/16
1244	Comb WR 12pt 1 3/8
1246	Comb WR 12pt 1 7/16
1248	Comb WR 12pt 1 1/2
1723	OE WR 5/16x3/8
1731	OE WR 3/4x13/16
2744	Multi Purpose Shear
7029	BxWR 12pt 11/16x3/4
7038	BxWR 12pt1-1/8x1-3/16
7723	BxWR 12pt 3/8x7/16
11312	Midget Comb WR 12pt 3/8
11314	Midget Comb WR12pt 7/16
11316	Midget Comb WR12pt 1/2
11318	Midget Comb WR 12pt 9/16
11320	Midget Comb WR 12pt 5/8
11322	Midget Comb WR12pt 11/16
11324	Midget Comb WR12pt 3/4
13408	Adj WR 8 Chr
13415	Adj WR 15 Chr
13424	Adj WR 24 Chr
20546	Bl PN Hmr 2 Lb
20651	CrPN Hmr 3 Lb
23152	SideCut SlJt Pls 7-1/2
23303	Curv Lock Pls W/Ctr10
23307	Crv Lock Pls 10
23310	Lg Lock Pls W/Ctr 9
23320	Cl Lock Pls Reg Tip 6
23321	Cl Lock Pls Reg Tip 11
23503	Wire Stripper / Crlmer
23612	Chn Nose PlsxL Nose 7-3/4
24401	3/16x3 Ntdrv Csh Gr
24403	1/4x3 Ntdrv Csh Gr
24405	5/16x3 Ntdrv Csh Gr
24407	11/32x3 Ntdrv Csh Gr
24409	3/8x3 Ntdrv Csh Gr
24411	7/16x3 Ntdrv Csh Gr
24413	1/2x3 Ntdrv Csh Gr
28201	Metal Shear Left
28203	Metal Shear Right
28205	Metal Shear Str
28449	Pch / Chs Holder
4-6	1/2Dr Im ADpr1/2 F 3/4
7727A	BxWR 12pt 5/8x11/16
1027B	OE WR 5/8x11/16
1033A	OE WR 7/8x15/16
1033C	OE WR 15/16x1
1037B	OE WR 1-1/8x1-3/16
1-100-04-3-2	4 Hd SM File w/PlHdl
1-111-04-3-2	4 WRD SM File w/PlHdl
1-160-04-3-2	4 SQ SM File w/PlHdl
1-170-04-3-2	4 3 SQ SM File w/PlHdl
1-210-04-3-2	4 1/2RD SM File w/PlHdl
1212SC	Comb WR 12pt 3/8
1214SC	Comb WR 12pt 7/16
1216SC	Comb WR 12pt 1/2
1218SC	Comb WR 12pt 9/16
1220SC	Comb WR 12pt 5/8
1222SC	Comb WR 12pt 11/16
1224SC	Comb WR 12pt 3/4
1226SC	Comb WR 12pt 13/16
1228SC	Comb WR 12pt 7/8
1-230-04-3-2	4 RD SM File w/PlHdl
1230SC	Comb WR 12pt 15/16
1232SC	Comb WR 12pt 1
1234SC	Comb WR 12pt 1 1/16
1236SC	Comb WR 12pt 1 1/8
1238SC	Comb WR 12pt 1 3/16
1240SC	Comb WR 12pt 1 1/4
12-610	3/8Dr DplmSkt6pt 5/16
12-612	3/8Dr DplmSkt6pt 3/8
12-614	3/8Dr DplmSkt6pt 7/16
12-616	3/8Dr DplmSkt6pt 1/2
12-618	3/8Dr DplmSkt6pt 9/16
12-620	3/8Dr DplmSkt6pt 5/8
12-622	3/8Dr DplmSkt6pt 11/16
12-624	3/8Dr DplmSkt6pt 3/4
14-616	1/2Dr DplmSkt6pt 1/2
14-618	1/2Dr DplmSkt6pt 9/16
14-620	1/2Dr DplmSkt6pt 5/8
14-622	1/2Dr DplmSkt6pt11/16
14-624	1/2Dr DplmSkt6pt 3/4
14-626	1/2Dr DplmSkt6pt13/16
14-628	1/2Dr DplmSkt6pt 7/8
14-630	1/2Dr DplmSkt6pt15/16
14-632	1/2Dr DplmSkt6pt 1
14-634	1/2Dr DplmSkt6pt 1-1/16
14-636	1/2Dr DplmSkt6pt 1-1/8
1725B	OE WR 1/2x9/16
2-4A	3/8Dr Im ADptr3/8F 1/2M
2-610	3/8Dr ImSkt6pt 5/16
2-612	3/8Dr ImSkt6pt 3/8
2-614	3/8Dr ImSkt6pt 7/16
2-616	3/8Dr ImSkt6pt 1/2
2-618	3/8Dr ImSkt6pt 9/16
2-620	3/8Dr ImSkt6pt 5/8
2-622	3/8Dr ImSkt6pt 11/16
2-624	3/8Dr ImSkt6pt 3/4
3832-22	Carbide Holesaw 7/8
3832-25	Carbide Holesaw 1
3832-29	Carbide Holesaw 1 1/8
3832-32	Carbide Holesaw 1 1-4
3832-38	Carbide Holesaw 1 1/2
3834-ADp-US	Holesaw Adp
3838-ARBR-730-US	Arbor
4-2A	1/2Dr Im ADpr1/2 F 3/8
4-616	1/2Dr ImSkt6pt 1/2
4-618	1/2Dr ImSkt6pt 9/16
4-620	1/2Dr ImSkt6pt 5/8
4-622	1/2Dr ImSkt6pt 11/16
4-624	1/2Dr ImSkt6pt 3/4
4-626	1/2Dr ImSkt6pt 13/16
4-628	1/2Dr ImSkt6pt 7/8
4-630	1/2Dr ImSkt6pt 15/16
4-632	1/2Dr ImSkt6pt 1
4-634	1/2Dr ImSkt6pt 7/8
4-636	1/2Dr ImSkt6pt 1-1/8
474A	Adj Hk Spr 4-1/2 To 6-1/4
6-4A	3/4Dr Im ADpr 3/4 F 1
7033C	BxWR 12pt 15/16x1
7039B	BxWR 12pt1-1/4x1-5/16
7725B	BxWR 12pt 1/2x9/16
7731B	BxWR 12pt 13/16x7/8
B-108	3/8Dr Ext 3
B-110	3/8Dr Ext 6
B-115	3/8Dr Ext 10 1/2
B-1208	3/8Dr Skt12pt 1/4
B-1210	3/8Dr Skt12pt 5/16
B-1211	3/8Dr Skt12pt 11/32
B-1212	3/8Dr Skt12pt 3/8
B-1214	3/8Dr Skt12pt 7/16
B-1216	3/8Dr Skt12pt 1/2
B-1218	3/8Dr Skt12pt 9/16
B-1220	3/8Dr Skt12pt 5/8
B-1222	3/8Dr Skt12pt 11/16
B-1224	3/8Dr Skt12pt 3/4
B-1226	3/8Dr Skt12pt 13/16
B-1228	3/8Dr Skt12pt 7/8
B-1230	3/8Dr Dp Skt12pt 5/16
B-1232	3/8Dr Dp Skt12pt 1
B-140A	3/8Dr U-Joint
B-15	3/8Dr Speeder
B-20A	3/8Dr Sliding T Hdle
B-40A	3/8Dr FlHdl
B-52EHA	3/8Dr Encl Hd Rat8
B-52EHLA	3/8Dr Encl Hd Rat 10-3/4
B-70	3/8Dr Ratchet Spinner
BA-10A	3/8Dr HexBtSkt 5/16
BA-12A	3/8Dr HexBtSkt 3/8
BA-4A	3/8Dr HexBtSkt 1/8
BA-5A	3/8Dr HexBtSkt 5/32
BA-6A	3/8Dr HexBtSkt 3/16
BA-7A	3/8Dr HexBtSkt 7/32
BA-8A	3/8Dr HexBtSkt 1/4
BD-1208	3/8Dr Dp Skt12pt 1/4
BD-1210	3/8Dr Dp Skt12pt 5/16
BD-1212	3/8Dr Dp Skt12pt 3/8
BD-1214	3/8Dr Dp Skt12pt 7/16
BD-1216	3/8Dr Dp Skt12pt 1/2
BD-1218	3/8Dr Dp Skt12pt 9/16
BD-1220	3/8Dr Dp Skt12pt 5/8
BD-1222	3/8Dr Dp Skt12pt11/16
BD-1224	3/8Dr Dp Skt12pt 3/4
BD-1226	3/8Dr Dp Skt12pt13/16
BD-1228	3/8Dr Dp Skt12pt 7/8
BD-1230	3/8Dr Dp Skt12pt 5/16
BD-1232	3/8Dr Dp Skt12pt 1
BD-808	3/8Dr Skt 8-Pt 1/4
BD-810	3/8Dr Skt 8-Pt 5/16
BD-812	3/8Dr Skt 8-Pt 3/8
BD-814	3/8Dr Skt 8-Pt 7/16
BD-816	3/8Dr Skt 8-Pt 1/2
BFE-8	3/8Dr Flible Ext 8
BU-1212	3/8Dr U-Skt12pt 3
BU-1214	3/8Dr U-Skt12pt 7
BU-1216	3/8Dr U-Skt12pt 1
BU-1218	3/8Dr U-Skt12pt 9
BU-1220	3/8Dr U-Skt12pt 5
BU-1222	3/8Dr U-Skt12pt 1
BU-1224	3/8Dr U-Skt12pt 3
C-12	Cd Chs 3/8
C-15	Cd Chs 7/16
C-20	Cd Chs 5/8
C-24	Cd Chs 3/4
C-83	Pch Bar 7/8 Flat 19-5/8
C-84	Pch Bar 1 Flat 29 3/4
CC-402C	C-Cl Cpr Screw 2
CC-404C	C-Cl Cpr Screw 4
CW-4	Chain WR
GS-1	Master Feeler Gauge Set
GS-3	Comb Feeler Gauge Set
GSC-12	GsktScpr-8-3/4x1 1/2
H-110	3/4Dr Ext 8
H-115	3/4Dr Ext 15 1/2
H-1248	3/4Dr Skt12pt 1-1/2
H-1252	3/4Dr Skt12pt 1-5/8
H-1258	3/4Dr Skt12pt 1-13/16
H-1260	3/4Dr Skt12pt 1-7/8
H-1264	3/4Dr Skt12pt 2
H-1270	3/4Dr Skt12pt 2-3/16
H-1272	3/4Dr Skt12pt 2-1/4
H-1276	3/4Dr Skt12pt 2-3/8
H-41AA	3/4Dr FlHdl Chr
H-51AB1	3/4Dr Ratchet
HBP-2	Bl PN Hmr 1-1/2 Lb
HBP-2-0	Bl PN Hmr 12oz
HK-050	L-Type Hex Key 050
HK-1/16	L-Type Hex Key 1/16
HK-1/4	L-Type Hex Key 1/4
HK-1/8	L-Type Hex Key 1/8
HK-3/16	L-Type Hex Key 3/16
HK-3/32	L-Type Hex Key 3/32
HK-3/8	L-Type Hex Key 3/8
HK-5/32	L-Type Hex Key 5/32
HK-5/64	L-Type Hex Key 5/64
HK-7/32	L-Type Hex Key 7/32
HK-7/64	L-Type Hex Key 7/64
HK-9/64	L-Type Hex Key 9/64
HSB-15	Brass Hmr 1-1/2 Lb
JHW-24	Deadblow Hmr 24oz

Contents: Master Maintenance Service Set WSC-352TB (con't)

Product Code	Description
JHW-48	Deadblow Hmr 48oz
M-102	1/4Dr Ext 2
M-104	1/4Dr Ext 4
M-106A	1/4Dr Spinner Hdle
M-115	1/4Dr Ext 6
M-1208	1/4Dr Skt12pt 1/4
M-1210	1/4Dr Skt12pt 5/16
M-1211	1/4Dr Skt12pt 11/32
M-1212	1/4Dr Skt12pt 3/8
M-1214	1/4Dr Skt12pt 7/16
M-1216	1/4Dr Skt12pt 1/2
M-1218	1/4Dr Skt12pt 9/16
M-140A	1/4Dr U-Joint
M-52EHA	1/4Dr Encl Hd Ratchet 5
MD-1210	1/4Dr Dp Skt12pt 5/16
MD-1211	1/4Dr Dp Skt12pt 11/3
MD-1212	1/4Dr Dp Skt12pt 3/8
MD-1214	1/4Dr Dp Skt12pt 7/16
MD-1216	1/4Dr Dp Skt12pt 1/2
MD-1218	1/4Dr Dp Skt12pt 9/16
O-471	Adj Pin Spr 3/4 To 2
O-472	Adj Pin Spr 1-1/4 To 3
O-474	Adj Pin Spr 2 To 4-3/4
O-474A	Adj Pin Spr 4-1/2 - 6-1/4
P-10	Pinpch 5/16 PT 6
P-14	Sldpch 1/8 PT 5
P-15	Sldpch 5/32 PT 5
P-16	Sldpch 3/16 PT 5
P-17	Sldpch 1/4' PT 5
P-18	Sldpch 3/8 PT 5
P-39	Centerpch5/16PT4-1/4
P-4	Pinpch 1/8 PT 4-3/4
P-40	Centerpch 3/8 PT 5
P-5	Pinpch 5/32 PT 5
P-6	Pinpch 3/16 PT 5-1/4
P-8	Pinpch 1/4 PT 5-3/4
PL-126C	Crv Chain Nose Pls6-1/4
PL-149C	Duckbill Pls Sh Nose 8
PL-1523C	Ut Superjoint Pls 12
PL-1524C	Ut Superjoint Pls 16
PL-47C	Diag Cut Pls Reg 7
PL-529	Snap Rg Tip Set
PL-57C	Diag Cut Pls Hi Lvrg
RB-1214	RatBxWR 6pt 3/8x7/16
RB-1618	RatBxWR 6pt 1/2x9/16
RB-2022	RatBxWR 12pt 5/8x11/16
RB-2428	RatBxWR 12pt 3/4x7/8
RB-810	RatBxWR 6pt 1/4x5/116
S-102P	1/2Dr Ext 2
S-110P	1/2Dr Ext 5-1/2
S-115P	1/2Dr Ext 10
S-140A	1/2Dr U-Joint
S-15A	1/2Dr Speeder 18-7/8
S-20A	1/2Dr Sliding T Hdle
S-41AA	1/2Dr FlHdl 17
S-52EHA	1/2Dr Encl Hd Rat 10 3/8
SA-10A	1/2Dr HexBtSkt 5/16
SA-12A	1/2Dr HexBtSkt 3/8
SA-16A	1/2Dr HexBtSkt 1/2
SA-18A	1/2Dr HexBtSkt 9/16
SA-20A	1/2Dr HexBtSkt 5/8
SD-1216	1/2Dr Dp Skt12pt 9/16
SD-1218	1/2Dr Dp Skt12pt 5/8
SD-1220	1/2Dr Dp Skt12pt 11/16
SD-1222	1/2Dr Dp Skt12pt 3/4
SD-1224	1/2Dr Dp Skt12pt 25/3
SD-1226	1/2Dr Dp Skt12pt 13/1
SD-1228	1/2Dr Dp Skt12pt 7/8
SD-1230	1/2Dr Dp Skt12pt 15/16
SD-1232	1/2Dr Dp Skt12pt 1
SD-1234	1/2Dr Dp Skt12pt 1-1/16
SD-1236	1/2Dr Dp Skt12pt 1-1/8
SDE-43	Scr Electr 3
SDP-1-3	Scr Ph 1-Pt 3
SDP-2-4	Scr Ph 2-Pt 4
SDP-2-8	Scr Ph 2-Pt
SDP-3-6	Scr Ph 3-Pt 6
SDR-22	Scr RD 3'
SDR-24	Scr RD 4
SDR-26	Scr RD 6
SDR-28	Scr RD 8
SDR-30	Scr RD 10
ST-1212	1/2Dr Skt12pt 3/8
ST-1214	1/2Dr Skt12pt 7/16
ST-1216	1/2Dr Skt12pt 1/2
ST-1218	1/2Dr Skt12pt 9/16
ST-1220	1/2Dr Skt12pt 5/8
ST-1222	1/2Dr Skt12pt 11/16
ST-1224	1/2Dr Skt12pt 3/4
ST-1226	1/2Dr Skt12pt 13/16
ST-1228	1/2Dr Skt12pt 7/8
ST-1230	1/2Dr Skt12pt 15/16
ST-1232	1/2Dr Skt12pt 1
ST-1234	1/2Dr Skt12pt 1-1/16
ST-1236	1/2Dr Skt12pt 1-1/8
ST-1238	1/2Dr Skt12pt 1-3/16
ST-1240	1/2Dr Skt12pt 1-1/4
ST-1242	1/2Dr Skt12pt 1-5/16
ST-812	1/2Dr Skt 8-Pt 3/8
ST-814	1/2Dr Skt 8-Pt 7/16
ST-816	1/2Dr Skt 8-Pt 1/2
ST-818	1/2Dr Skt 8-Pt 9/16
ST-820	1/2Dr Skt 8-Pt 5/8
ST-822	1/2Dr Skt 8-Pt 11/16
ST-824	1/2Dr Skt 8-Pt 3/4
ST-826	1/2Dr Skt 8-Pt 13/16
ST-828	1/2Dr Skt 8-Pt 7/8
ST-830	1/2Dr Skt 8-Pt 15/16
ST-832	1/2Dr Skt 8-Pt 1
TS50100	1/2Dr TurboSkt 1
TS50750	1/2Dr TurboSkt 3/4
TS50812	1/2Dr TurboSkt 13/16
TS50875	1/2Dr TurboSkt 7/8
TS50937	1/2Dr TurboSkt 15/16
WRS-1	Rat Scr
XFN-0810	FL NUT WR 1/4x5/16
XFN-1214	FL NUT WR 3/8x7/16
XFN-1618	FL NUT WR 1/2x9/16
XFN-2022	FL NUT WR 5/8x11/16
XFN-2432	FL NUT WR 3/4x1
W40RC7	40" Roll Cabinet
W40TC4	40 Top Chest

Contents: Intermediate Technician Tool Set WSC-317TB

Refer to Master Set Section for Photo and Description

Note: WSC-317 Includes All Tools Only, Without Tool Storage Cabinets

Product Code	Description
10600	Flr Nut Wr 3/8 X 7/16"
10602	Flr Nut Wr 1/2 X 9/16"
10604	Flr Nut Wr 5/8 X 11/16"
10606	Flr Nut Wr 3/4 X 7/8"
10650	Flr Nut Wr 9MM X 11MM
10652	Flr Nut Wr 10MM X 12MM
10654	Flr Nut Wr 13MM X 14MM
10656	Flr Nut Wr 15MM X 17MM
10658	Flr Nut Wr 19MM X 21MM
11108	Combo Wr 12 Pt 1/4"
11110	Combo Wr 12 Pt 5/16"
11112	Combo Wr 12 Pt 3/8"
11114	Combo Wr 12 Pt 7/16"
11116	Combo Wr 12 Pt 1/2"
11118	Combo Wr 12 Pt 9/16"
11120	Combo Wr 12 Pt 5/8"
11122	Combo Wr 12 Pt 11/16"
11124	Combo Wr 12 Pt 3/4"
11126	Combo Wr 12 Pt 13/16"
11128	Combo Wr 12 Pt 7/8"
11130	Combo Wr 12 Pt 15/16"
11132	Combo Wr 12 Pt 1"
11134	Combo Wr 12 Pt 1-1/16"
11136	Combo Wr 12 Pt 1-1/8"
11140	Combo Wr 12 Pt 1-1/4"
1-143-08-1-2	Mill File ergo® 8" Bastard Cut44 TPI
11506	Combo Wr 12 Pt 6MM
11507	Combo Wr 12 Pt 7MM
11508	Combo Wr 12 Pt 8MM
11509	Combo Wr 12 Pt 9MM
11510	Combo Wr 12 Pt 10MM
11511	Combo Wr 12 Pt 11MM
11512	Combo Wr 12 Pt 12MM
11513	Combo Wr 12 Pt 13MM
11514	Combo Wr 12 Pt 14MM
11515	Combo Wr 12 Pt 15MM
11516	Combo Wr 12 Pt 16MM
11517	Combo Wr 12 Pt 17MM
11518	Combo Wr 12 Pt 18MM
11519	Combo Wr 12 Pt 19MM
11520	Combo Wr 12 Pt 20MM
11521	Combo Wr 12 Pt 21MM
11522	Combo Wr 12 Pt 22MM
11523	Combo Wr 12 Pt 23MM
11524	Combo Wr 12 Pt 24MM
1208MRC	Rtch Combo Wr 12Pt 8MM
1209MRC	Rtch Combo Wr 12Pt 9MM
1-210-08-2-2	Half Rd File ergo® 8" Second. 36 TPI
1210MRC	Rtch Combo Wr 12Pt 10MM
1210RC	Rtch Combo Wr 12Pt 5/16"
1211MRC	Rtch Combo Wr 12Pt 11MM
1212MRC	Rtch Combo Wr 12Pt 12MM
1212RC	Rtch Combo Wr 12Pt 3/8"
1213MRC	Rtch Combo Wr 12Pt 13MM
1214MRC	Rtch Combo Wr 12Pt 14MM
1214RC	Rtch Combo Wr 12Pt 7/16"
1215MRC	Rtch Combo Wr 12Pt 15MM
1216MRC	Rtch Combo Wr 12Pt 16MM
1216RC	Rtch Combo Wr 12Pt 1/2"
1217MRC	Rtch Combo Wr 12Pt 17MM
1218MRC	Rtch Combo Wr 12Pt 18MM
1218RC	Rtch Combo Wr 12Pt 9/16"
1219MRC	Rtch Combo Wr 12Pt 19MM
1220RC	Rtch Combo Wr 12Pt 5/8"
1222RC	Rtch Combo Wr 12Pt 11/16"
1224RC	Rtch Combo Wr 12Pt 3/4"
1-230-08-2-2	RD File ergo® 8" Second 36 TPI
13213	Ball End Hex Key Long 13 Piece
13406	Chrome Adj. Wr 6"
13408	Chrome Adj. Wr 8"
13410	Chrome Adj. Wr 10"
13520	10" Pipe Wr Cast Iron Heavy-Duty
13609	Metric Ball Hex Key Long 9 Piece
20543	2 Oz Ball Pein Hammer
20545	24 Oz Ball Pein Hammer
21661	18" Cft Grip Prybar
21661	8" Cft Grip Prybar
23102	8" Slip Joint Plier
23105	9-3/4" Groove-Joint Plier
23107	15-3/4" Groove-Joint Plier
23201	5" Cft Grip Lck Pliers Curved Jaw
23202	7" Cft Grip Lck Pliers Curved Jaw
23211	10" Cft Grip Lck Pliers Straight Jaw
23220	6" Cft Grip Lck Pliers Long Nose
23407	7" Heavy Duty Diagonal Cutting
23411	8" Long Nose
24217	Scr 1/4X1-1/2" RD Slotted
24219	Scr 1/4X4" RD Slotted
24229	Scr 1/4X6" RD Slotted
24237	Scr 5/16X6" RD Slotted
24241	Scr 3/8X8" RD Slotted
24249	Scr #1 X 3 Phillips®
24251	Scr #2 X 1-1/2 Phillips®
24253	Scr #2 X 4 Phillips®
2502MRMH	3/8" Dr 30-250 In. Lb. Micro-Adj.
2503MFRMH	1/2" Dr 30-250 Ft. Lb. Micro-Adj.
30001	1/4" Dr Ratchet 5-1/4"
30003	1/4" Dr Ext 1-1/2"
30004	1/4" Dr Ext 6"
30005	6 1/4" Dr Flex Bar
30007	1/4" Dr Universal Joint
30008	1/4" Dr Sliding T-Handle
31001	3/8" Dr Ratchet 7-3/4"
31002	3/8" Dr Ext 3"
31003	3/8" Dr Ext 6"
31004	3/8" Dr Ext 10"
31005	10 3/8" Dr Flex Bar
31006	3/8" Dr Universal Joint
31007	3/8" Dr Sliding T-Handle
31108	3/8" Dr Std Skt 6-Pt 1/4"
31110	3/8" Dr Std Skt 6-Pt 5/16"
31112	3/8" Dr Std Skt 6 Pt 3/8"
31114	3/8" Dr Std Skt 6-Pt 7/16"
31116	3/8" Dr Std Skt 6-Pt 1/2"
31118	3/8" Dr Std Skt 6-Pt 9/16"
31120	3/8" Dr Std Skt 6-Pt 5/8"
31122	3/8" Dr Std Skt 6-Pt 11/16"
31124	3/8" Dr Std Skt 6-Pt 3/4"
31301	3/8" Dr Spark Plug Skt 5/8"
31303	3/8" Dr Spark Plug Skt 13/16"
31408	3/8" Dr Dp Skt 12-Pt 1/4"
31410	3/8" Dr Dp Skt 12-Pt 5/16"
31412	3/8" Dr Dp Skt 12-Pt 3/8"
31414	3/8" Dr Dp Skt 12-Pt 7/16"
31416	3/8" Dr Dp Skt 12-Pt 1/2"
31418	3/8" Dr Dp Skt 12-Pt 9/16"
31420	3/8" Dr Dp Skt 12-Pt 5/8"
31422	3/8" Dr Dp Skt 12-Pt11/16"
31424	3/8" Dr Dp Skt 12-Pt 3/4"
31510	3/8" Dr Std Skt 6-Pt 10MM
31511	3/8" Dr Std Skt 6-Pt 11MM
31512	3/8" Dr Std Skt 6-Pt 12MM
31513	3/8" Dr Std Skt 6-Pt 13MM
31514	3/8" Dr Std Skt 6-Pt 14MM
31515	3/8" Dr Std Skt 6-Pt 15MM
31516	3/8" Dr Std Skt 6-Pt 16MM
31517	3/8" Dr Std Skt 6-Pt 17MM
31810	3/8" Dr Dp Skt 12-Pt 10MM
31811	3/8" Dr Dp Skt 12-Pt 11MM
31812	3/8" Dr Dp Skt 12-Pt 12MM
31813	3/8" Dr Dp Skt 12-Pt 13MM
31814	3/8" Dr Dp Skt 12-Pt 14MM
31815	3/8" Dr Dp Skt 12-Pt 15MM
31816	3/8" Dr Dp Skt 12-Pt 16MM
31817	3/8" Dr Dp Skt 12-Pt 17MM
32001	1/2" Dr Ratchet 9-7/8"
32002	1/2" Dr Ext 3"
32003	1/2" Dr Ext 6"
32004	1/2" Dr Ext 10"
32006	1/2" Dr Universal Joint
32007	1/2" Dr Sliding T Handle
32212	1/2" Dr Std Skt 12-Pt 3/8"
32214	1/2" Dr Std Skt 12-Pt 7/16"
32216	1/2" Dr Std Skt 12-Pt 1/2"
32218	1/2" Dr Std Skt 12-Pt 9/16"
32220	1/2" Dr Std Skt 12-Pt 5/8"
32222	1/2" Dr Std Skt 12-Pt 11/16"
32224	1/2" Dr Std Skt 12-Pt 3/4"
32226	1/2" Dr Std Skt 12-Pt 13/16"
32228	1/2" Dr Std Skt 12-Pt 7/8"
32230	1/2" Dr Std Skt 12-Pt 15/16"
32232	1/2" Dr Std Skt 12-Pt 1"
32234	1/2" Dr Std Skt 12-Pt 1-1/16"
32236	1/2" Dr Std Skt 12-Pt 1-1/8"
32238	1/2" Dr Std Skt 12-Pt 1-3/16"
32240	1/2" Dr Std Skt 12-Pt 1-1/4"
32248	1/2" Dr Std Skt 12-Pt 1-1/2"
32416	1/2" Dr Dp Skt 12-Pt 1/2"
32418	1/2" Dr Dp Skt 12-Pt 9/16"
32420	1/2" Dr Dp Skt 12-Pt 5/8"
32422	1/2" Dr Dp Skt 12-Pt 11/16"
32424	1/2" Dr Dp Skt 12-Pt 3/4"
32426	1/2" Dr Dp Skt 12-Pt 13/16"
32428	1/2" Dr Dp Skt 12-Pt 7/8"
32430	1/2" Dr Dp Skt 12-Pt 15/16"
32432	1/2" Dr Dp Skt 12-Pt 1"
32609	1/2" Dr Std Skt 12-Pt 9MM
32610	1/2" Dr Std Skt 12-Pt 10MM
32611	1/2" Dr Std Skt 12-Pt 11MM
32612	1/2" Dr Std Skt 12-Pt 12MM

Contents: Intermediate Technician Tool Set WSC-317TB (con't)

Product Code	Description
32613	1/2" Dr Std Skt 12-Pt 13MM
32614	1/2" Dr Std Skt 12-Pt 14MM
32615	1/2" Dr Std Skt 12-Pt 15MM
32616	1/2" Dr Std Skt 12-Pt 16MM
32617	1/2" Dr Std Skt 12-Pt 17MM
32618	1/2" Dr Std Skt 12-Pt 18MM
32619	1/2" Dr Std Skt 12-Pt 19MM
32620	1/2" Dr Std Skt 12-Pt 20MM
32621	1/2" Dr Std Skt 12-Pt 21MM
32622	1/2" Dr Std Skt 12-Pt 22MM
32623	1/2" Dr Std Skt 12-Pt 23MM
32624	1/2" Dr Std Skt 12-Pt 24MM
35081	1/4" Dr Torx Bit Skt T15
35082	1/4" Dr Torx Bit Skt T20
35083	1/4" Dr Torx Bit Skt T25
35100	3/8" Dr Hex Bit Skt, 1/8"
35101	3/8" Dr Hex Bit Skt, 9/64
35102	3/8" Dr Hex Bit Skt, 5/32
35103	3/8" Dr Hex Bit Skt, 3/16
35104	3/8" Dr Hex Bit Skt, 7/32
35105	3/8" Dr Hex Bit Skt, 1/4
35106	3/8" Dr Hex Bit Skt, 5/16
35107	3/8" Dr Hex Bit Skt 3/8
35140	3/8" Dr Slotted Skt 1/4"
35141	3/8" Dr Slotted Skt 5/16"
35142	3/8" Dr Slotted Skt 3/8"
35143	3/8" Dr Slotted Skt 3/16"
35150	3/8" Dr Phillips® Skt #1"
35151	3/8" Dr Phillips® Skt #2"
35152	3/8" Dr Phillips® Skt #3"
35170	3/8 Dr Hex Bit Skt, 4 mm
35171	3/8 Dr Hex Bit Skt, 5 mm
35172	3/8 Dr Hex Bit Skt, 6 mm
35173	3/8 Dr Hex Bit Skt , 7 mm
35174	3/8 Dr Hex Bit Skt, 8 mm
35175	3/8 Dr Hex Bit Skt, 9 mm
35176	3/8 Dr Hex Bit Skt , 10 mm
35184	3/8" Dr Torx Bit Skt T30
35185	3/8" Dr Torx Bit Skt T40
35186	3/8" Dr Torx Bit Skt T45
35188	3/8" Dr Torx Bit Skt T50
37330	1/2" Dr Dp Impact Skt 6-Pt 15/16"
37332	1/2" Dr Dp Impact Skt 6-Pt 1"
4-186-06-2-2	Slim Taper File 6" ergo® Second
7029B	Box Wr 12-Pt 11/16 X 3/4"
7033C	Box Wr 12-Pt 15/16 X 1"
7723	Box Wr 12-Pt 3/8 X 7/16"
7725B	Box Wr 12-Pt 1/2 X 9/16"
7727A	Box Wr 12-Pt 5/8 X 11/16"
7731A	Box Wr 12-Pt 3/4 X 7/8"
7731B	Box Wr 12-Pt 13/16 X 7/8"
850002	Tape Measure
C-16	Cold Chisel 1/2"
C-20	Cold Chisel 5/8"
C-24	Cold Chisel 3/4"
C-715	Roll Bar 16"
C-8	Cold Chisel 1/4"
CW-4	Chain Wr
EX-21A	1/8" Fl Scr Ext
EX-21B	3/16" Fl Scr Ext
EX-22A	7/32" Fl Scr Ext
EX-24A	5/16" Fl Scr Ext
EX-25A	15/32" Fl Scr Ext
EX-25B	3/8" Fl Scr Ext
EX-26A	9/16" Fl Scr Ext
EX-28	21/32" Fl Scr Ext
EX-29	13/16" Fl Scr Ext
GS-1	Master Feeler Gauge Set
HSB-1.5	Brass Hammer, 1-1/2 Lb
JHW-32	Deadblow Hammer 32 Oz
M-808	1/4" Dr Std Skt 8-Pt 1/4"
M-810	1/4" Dr Std Skt 8-Pt 5/16"
M-812	1/4" Dr Std Skt 8-Pt 3/8"
P-30	Prick Punch 3/8" Point 5"
P-40	Center Punch 3/8" Point 5"
P-6	Pin Punch 3/16" Point 5-1/4"
PL-527	Internal Snap Ring Plier
PL-528	External Snap Ring Plier
SMD-1213	1/2" Dr Dp Skts 12 Pt 13 MM
SMD-1214	1/2" Dr Dp Skts 12 Pt 14 MM
SMD-1215	1/2" Dr Dp Skts 12 Pt 15 MM
SMD-1216	1/2" Dr Dp Skts 12 Pt 16 MM
SMD-1217	1/2" Dr Dp Skts 12 Pt 17 MM
SMD-1218	1/2" Dr Dp Skts 12 Pt 18 MM
SMD-1219	1/2" Dr Dp Skts 12 Pt 19 MM
SMD-1221	1/2" Dr Dp Skts 12 Pt 21 MM
SMD-1222	1/2" Dr Dp Skts 12 Pt 22 MM
SMD-1224	1/2" Dr Dp Skts 12 Pt 24 MM
SMD-1227	1/2" Dr Dp Skts 12 Pt 27 MM
SMD-1230	1/2" Dr Dp Skts 12 Pt 30 MM
W40RC7	40" Roller Cabinet
W40TC4	40" Top Chest

Contents: Advanced Maintenance Service Set WSC-277TB

Refer to Master Set Section for Photo and Description

Note: WSC-277 Includes All Tools Only, Without Tool Storage Cabinets

Product Code	Description
1020	OE WR 1/4x5/16
1027B	OE WR 5/8x11/16
1037	OE WR 1-1/16x1-1/4
1038	OE WR 1-1/4x1-5/16
1033A	OE WR 7/8x15/16
1033C	OE WR 15/16x1
1037B	OE WR 1-1/8x1-3/16
11312	Midget Comb WR 12pt 3/8
11314	Midget Comb WR12pt 7/16
11316	Midget Comb WR12pt 1/2
11318	Midget Comb WR 12pt 9/16
11320	Midget Comb WR 12pt 5/8
11322	Midget Comb WR12pt 11/16
11324	Midget Comb WR12pt 3/4
1212SC	Comb WR 12pt 3/8
1214SC	Comb WR 12pt 7/16
1216SC	Comb WR 12pt 1/2
1218SC	Comb WR 12pt 9/16
1220SC	Comb WR 12pt 5/8
1222SC	Comb WR 12pt 11/16
1224SC	Comb WR 12pt 3/4
1226SC	Comb WR 12pt 13/16
1228SC	Comb WR 12pt 7/8
1230SC	Comb WR 12pt 15/16
1232SC	Comb WR 12pt 1
12-610	3/8Dr DpImSkt6pt 5/16
12-612	3/8Dr DpImSkt6pt 3/8
12-614	3/8Dr DpImSkt6pt 7/16
12-616	3/8Dr DpImSkt6pt 1/2
12-618	3/8Dr DpImSkt6pt 9/16
12-620	3/8Dr DpImSkt6pt 5/8
12-622	3/8Dr DpImSkt6pt 11/16
12-624	3/8Dr DpImSkt6pt 3/4
13408	Adj WR 8 Chr
13415	Adj WR 15 Chr
13424	Adj WR 24 Chr
1723	OE WR 5/16x3/8
1725B	OE WR 1/2x9/16
1731	OE WR 3/4x13/16
1-100-04-3-2	4 Hd SM File w/PlHdl
1-111-04-3-2	4 WRD SM File w/PlHdl
1-160-04-3-2	4 SQ SM File w/PlHdl
1-170-04-3-2	4 3 SQ SM File w/PlHdl
1-210-04-3-2	4 1/2RD SM File w/PlHdl
1-230-04-3-2	4 RD SM File w/PlHdl
23152	SideCut SlJt Pls 7-1/2
23303	Curv Lock Pls W/Ctr10
23307	Crv Lock Pls 10
23310	Lg Lock Pls W/Ctr 9
23503	Wire Stripper / Crimper
23612	Chn Nose PlsxL Nose 7-3
24401	3/16x3 Ntdrv Csh Gr
24403	1/4x3 Ntdrv Csh Gr
24405	5/16x3 Ntdrv Csh Gr
24407	11/32x3 Ntdrv Csh Gr
24409	3/8x3 Ntdrv Csh Gr
24411	7/16x3 Ntdrv Csh Gr
24413	1/2x3 Ntdrv Csh Gr
2744	Multi Purpose Shear
28201	Metal Shear Left
28203	Metal Shear Right
28205	Metal Shear Str
28449	Pch / Chs Holder
2-4A	3/8Dr Im ADptr3/8F 1/2M
2-610	3/8Dr ImSkt6pt 5/16
2-612	3/8Dr ImSkt6pt 3/8
2-614	3/8Dr ImSkt6pt 7/16
2-616	3/8Dr ImSkt6pt 1/2
2-618	3/8Dr ImSkt6pt 9/16
2-620	3/8Dr ImSkt6pt 5/8
2-622	3/8Dr ImSkt6pt 11/1
2-624	3/8Dr ImSkt6pt 3/4
325	Hksw
3832-22	Carbide Holesaw 7/8
3832-25	Carbide Holesaw 1
3832-29	Carbide Holesaw 1 1/8
3832-32	Carbide Holesaw 1 1-4
3832-38	Carbide Holesaw 1 1/2
3834-ADp-US	Holesaw Adp
3838-ARBR-730-US	Arbor
4-2A	1/2Dr Im ADpr1/2 F 3/8
625	Scrp
7029	BxWR 12pt 11/16x3/4
7038	BxWR 12pt1-1/8x1-3/
7033C	BxWR 12pt 15/16x1
7039B	BxWR 12pt1-1/4x1-5/
7723	BxWR 12pt 3/8x7/16
7725B	BxWR 12pt 1/2x9/16
7731B	BxWR 12pt 15/16x1
7727A	BxWR 12pt 5/8x11/16
B-1208	3/8Dr Skt12pt 1/4
B-1210	3/8Dr Skt12pt 5/16
B-1211	3/8Dr Skt12pt 11/32
B-1212	3/8Dr Skt12pt 3/8
B-1214	3/8Dr Skt12pt 7/16
B-1216	3/8Dr Skt12pt 1/2
B-1218	3/8Dr Skt12pt 9/16
B-1220	3/8Dr Skt12pt 5/8
B-1222	3/8Dr Skt12pt 11/16
B-1224	3/8Dr Skt12pt 3/4
B-1226	3/8Dr Skt12pt 13/16
B-1228	3/8Dr Skt12pt 7/8
B-108	3/8Dr Ext 3
B-110	3/8Dr Ext 6
B-115	3/8Dr Ext 10 1/2
B-140A	3/8Dr U-Joint
B-15	3/8Dr Speeder
B-20A	3/8Dr Sliding T Hdle
B-40A	3/8Dr FlHdl
B-52EHA	3/8Dr Encl Hd Rat 7-3/
B-52EHLA	3/8Dr Encl Hd Rat 10-1/2
B-70	3/8Dr Ratchet Spinner
BA-10A	3/8Dr HexBtSkt 5/16
BA-12A	3/8Dr HexBtSkt 3/8
BA-4A	3/8Dr HexBtSkt 1/8
BA-5A	3/8Dr HexBtSkt 5/32
BA-6A	3/8Dr HexBtSkt 3/16
BA-7A	3/8Dr HexBtSkt 7/32
BA-8A	3/8Dr HexBtSkt 1/4
BD-1208	3/8Dr Dp Skt12pt 1/4
BD-1210	3/8Dr Dp Skt12pt 5/16
BD-1212	3/8Dr Dp Skt12pt 3/8
BD-1214	3/8Dr Dp Skt12pt 7/16
BD-1216	3/8Dr Dp Skt12pt 1/2
BD-1218	3/8Dr Dp Skt12pt 9/16
BD-1220	3/8Dr Dp Skt12pt 5/8
BD-1222	3/8Dr Dp Skt12pt11/16
BD-1224	3/8Dr Dp Skt12pt 3/4
BD-1226	3/8Dr Dp Skt12pt13/16
BD-1228	3/8Dr Dp Skt12pt 7/8
BD-1230	3/8Dr Dp Skt12pt 5/16
BD-1232	3/8Dr Dp Skt12pt 1
BD-808	3/8Dr Skt 8-Pt 1/4
BD-810	3/8Dr Skt 8-Pt 5/16
BD-812	3/8Dr Skt 8-Pt 3/8
BD-814	3/8Dr Skt 8-Pt 7/16
BD-816	3/8Dr Skt 8-Pt 1/2
BFE-8	3/8Dr Flible Ext 8
BU-1212	3/8Dr U-Skt12pt 3
BU-1214	3/8Dr U-Skt12pt 7
BU-1216	3/8Dr U-Skt12pt 1
BU-1218	3/8Dr U-Skt12pt 9
BU-1220	3/8Dr U-Skt12pt 5
BU-1222	3/8Dr U-Skt12pt 1
BU-1224	3/8Dr U-Skt12pt 3
C-12	Cd Chs 3/8
C-15	Cd Chs 7/16
C-20	Cd Chs 5/8
C-24	Cd Chs 3/4
GS-1	Master Feeler Gauge Set
GS-3	Comb Feeler Gauge Set
GSC-12	GsktScpr-8-3/4x1 1/2
HBP-2	Bl PN Hmr 1-1/2 Lb
HBP-2-0	Bl PN Hmr 12oz
HK-050	L-Type Hex Key 050
HK-1/16	L-Type Hex Key 1/16
HK-1/4	L-Type Hex Key 1/4
HK-1/8	L-Type Hex Key 1/8
HK-3/16	L-Type Hex Key 3/16
HK-3/32	L-Type Hex Key 3/32
HK-3/8	L-Type Hex Key 3/8
HK-5/32	L-Type Hex Key 5/32
HK-5/64	L-Type Hex Key 5/64
HK-7/32	L-Type Hex Key 7/32
HK-7/64	L-Type Hex Key 7/64
HK-9/64	L-Type Hex Key 9/64
JHW-24	Deadblow Hmr 24oz
M-1208	1/4Dr Skt12pt 1/4
M-1210	1/4Dr Skt12pt 5/16
M-1211	1/4Dr Skt12pt 11/32
M-1212	1/4Dr Skt12pt 3/8
M-1214	1/4Dr Skt12pt 7/16
M-1216	1/4Dr Skt12pt 1/2
M-1218	1/4Dr Skt12pt 9/16
M-102	1/4Dr Ext 2
M-104	1/4Dr Ext 4
M-106A	1/4Dr Spinner Hdle
M-115	1/4Dr Ext 6
M-140A	1/4Dr U-Joint
M-52EHA	1/4Dr Encl Hd Ratchet 5
MD-1210	1/4Dr Dp Skt12pt 5/16
MD-1211	1/4Dr Dp Skt12pt 11/3
MD-1212	1/4Dr Dp Skt12pt 3/8
MD-1214	1/4Dr Dp Skt12pt 7/16
MD-1216	1/4Dr Dp Skt12pt 1/2
MD-1218	1/4Dr Dp Skt12pt 9/16
P-10	Pinpch 5/16 PT 6
P-14	Sldpch 1/8 PT 5
P-15	Sldpch 5/32 PT 5
P-16	Sldpch 3/16 PT 5
P-17	Sldpch 1/4' PT 5
P-18	Sldpch 3/8 PT 5
P-39	Centerpch5/16PT4-1/4
P-4	Pinpch 1/8 PT 4-3/4
P-40	Centerpch 3/8 PT 5
P-5	Pinpch 5/32 PT 5
P-6	Pinpch 3/16 PT 5-1/4
P-8	Pinpch 1/4 PT 5-3/4
PL-126C	Crv Chain Nose Pls6-1/4
PL-149C	Duckbill Pls Sh Nose 8
PL-1523C	Ut Superjoint Pls 12
PL-1524C	Ut Superjoint Pls 16
PL-47C	Diag Cut Pls Reg 7
PL-57C	Diag Cut Pls Hi Lvrg
RB-1214	RatBxWR 6pt 3/8x7/1
RB-1618	RatBxWR 6pt 1/2x9/1
RB-2022	RatBxWR 12pt 5/8x11
RB-2428	RatBxWR 12pt 3/4x7/
RB-810	RatBxWR 6pt 1/4x5/1
S-102P	1/2Dr Ext 2
S-110P	1/2Dr Ext 5-1/2
S-140A	1/2Dr U-Joint
S-15A	1/2Dr Speeder 18-7/8
S-20A	1/2Dr Sliding T Hdle
S-41AA	1/2Dr FlHdl 17
S-52EHA	1/2Dr Encl Hd Rat 7-3/
SA-10A	1/2Dr HexBtSkt 5/16
SA-12A	1/2Dr HexBtSkt 3/8
SA-16A	1/2Dr HexBtSkt 1/2
SA-18A	1/2Dr HexBtSkt 9/16

Contents: Advanced Maintenance Service Set WSC-277TB (con't)

Product Code	Description
SA-20A	1/2Dr HexBtSkt 5/8
SD-1216	1/2Dr Dp Skt12pt 9/16
SD-1218	1/2Dr Dp Skt12pt 5/8
SD-1220	1/2Dr Dp Skt12pt 11/1
SD-1222	1/2Dr Dp Skt12pt 3/4
SD-1224	1/2Dr Dp Skt12pt 25/3
SD-1226	1/2Dr Dp Skt12pt 13/1
SD-1228	1/2Dr Dp Skt12pt 7/8
SD-1230	1/2Dr Dp Skt12pt 15/1
SD-1232	1/2Dr Dp Skt12pt 1
SD-1234	1/2Dr Dp Skt12pt 1-1/
SD-1236	1/2Dr Dp Skt12pt 1-1/

Product Code	Description
SDE-43	Scr Electr 3
SDP-1-3	Scr Ph 1-Pt 3
SDP-2-4	Scr Ph 2-Pt 4
SDP-2-8	Scr Ph 2-Pt
SDP-3-6	Scr Ph 3-Pt 6
SDR-22	Scr RD 3'
SDR-24	Scr RD 4
SDR-26	Scr RD 6
SDR-28	Scr RD 8
SDR-30	Scr RD 10
ST-1212	1/2Dr Skt12pt 3/8
ST-1214	1/2Dr Skt12pt 7/16

Product Code	Description
ST-1216	1/2Dr Skt12pt 1/2
ST-1218	1/2Dr Skt12pt 9/16
ST-1220	1/2Dr Skt12pt 5/8
ST-1222	1/2Dr Skt12pt 11/16
ST-1224	1/2Dr Skt12pt 3/4
ST-1226	1/2Dr Skt12pt 13/16
ST-1228	1/2Dr Skt12pt 7/8
ST-1230	1/2Dr Skt12pt 15/16
ST-1232	1/2Dr Skt12pt 1
ST-1234	1/2Dr Skt12pt 1-1/1
ST-1236	1/2Dr Skt12pt 1-1/8
ST-1238	1/2Dr Skt12pt 1-3/1

Product Code	Description
ST-1240	1/2Dr Skt12pt 1-1/4
ST-1242	1/2Dr Skt12pt 1-5/1
ST-812	1/2Dr Skt 8-Pt 3/8
ST-814	1/2Dr Skt 8-Pt 7/16
ST-816	1/2Dr Skt 8-Pt 1/2
ST-818	1/2Dr Skt 8-Pt 9/16
ST-820	1/2Dr Skt 8-Pt 5/8
ST-822	1/2Dr Skt 8-Pt 11/16
ST-824	1/2Dr Skt 8-Pt 3/4
ST-826	1/2Dr Skt 8-Pt 13/16
ST-828	1/2Dr Skt 8-Pt 7/8
ST-830	1/2Dr Skt 8-Pt 15/16

Product Code	Description
ST-832	1/2Dr Skt 8-Pt 1
WRS-1	Rat Scr
XFN-0810	FL NUT WR 1/4x5/16
XFN-1214	FL NUT WR 3/8x7/16
XFN-1618	FL NUT WR 1/2x9/16
XFN-2022	FL NUT WR 5/8x11/16
XFN-2432	FL NUT WR 3/4x1
W40RC7	40" Roll Cabinet
W40TC4	40 Top Chest

Contents: Maintenance Tool Set WSC-231TB

Refer to Master Set Section for Photo and Description

Note: WSC-231 Includes All Tools Only, Without Tool Storage Cabinets

Product Code	Description
1020	Open End Wr 1/4 X 5/16"
1033C	Open End Wr 15/16 X 1"
1037	Open End Wr 1-1/16 X 1-1/4"
1037B	Open End Wr 1-1/8 X 1-3/16"
11312	Stubby Combo Wr 3/8"
11314	Stubby Combo Wr 7/16"
11316	Stubby Combo Wr 1/2"
11318	Stubby Combo Wr 9/16"
11320	Stubby Combo Wr 5/8"
11322	Stubby Combo Wr 11/16"
11324	Stubby Combo Wr 3/4"
11961	Combo Wr Offset 15/16"
11962	Combo Wr Offset 1"
11990	Combo Wr Offset Set
1-476-04-3-2	File W/Pltc Hdls 6-Pcs
1723	Open End Wr 3/8 X 7/16"
1725	Open End Wr 7/16 X 1/2"
1725B	Open End Wr 1/2 X 9/16"
1727	Open End Wr 9/16 X 5/8"
1729B	Open End Wr 11/16 X 3/4"
1731B	Open End Wr 13/16 X 7/8"
20002	C-Clamp Copper Screw 2"
20006	C-Clamp Copper Screw 6"

Product Code	Description
20543	2 Oz Ball Pein Hmmer
23605	6-1/4" Dia Cut
23607	8" Dia Cut - Piano Wire Cut
24205	Scr 3/16X4" Round Slt
24205	Scr 3/16X4" Round Slt
24217	Scr 1/4X1-1/2" Round Slt
24217	Scr 1/4X1-1/2" Round Slt
24219	Scr 1/4X4" Round Slt
24219	Scr 1/4X4" Round Slt
24237	Scr 5/16X6" Round Slt
24237	Scr 5/16X6" Round Slt
24241	Scr 3/8X8" Round Slt
24241	Scr 3/8X8" Round Slt
24249	Scr #1 X 3 Phillips®
24249	Scr #1 X 3 Phillips®
24251	Scr #2 X 1-1/2 Phillips®
24251	Scr #2 X 1-1/2 Phillips®
24253	Scr #2 X 4 Phillips®
24253	Scr #2 X 4 Phillips®
24401	NutDrr 3/16 X 3" Cushion Grip
24403	NutDrr 1/4 X 3" Cushion Grip
24405	NutDrr 5/16 X 3" Cushion Grip
24407	NutDrr 11/32 X 3" Cushion Grip

Product Code	Description
24409	NutDrr 3/8 X 3" Cushion Grip
24411	NutDrr 7/16 X 3" Cushion Grip
24413	NutDrr 1/2 X 3" Cushion Grip
28201	Aviation Snips Left Cut
28203	Aviation Snips Right Cut
28205	Aviation Snips Straight Cut
28449	Punch / Chisel Holder
306	Do It Yourself Hacksaw Frame
30933	26 Pc 1/4" Skt/Tool Set
31408	3/8" Dr Dp Skt 12-Pt 1/4"
31408	3/8" Dr Dp Skt 12-Pt 1/4"
31410	3/8" Dr Dp Skt 12-Pt 5/16"
31410	3/8" Dr Dp Skt 12-Pt 5/16"
31412	3/8" Dr Dp Skt 12-Pt 3/8"
31412	3/8" Dr Dp Skt 12-Pt 3/8"
31414	3/8" Dr Dp Skt 12-Pt 7/16"
31414	3/8" Dr Dp Skt 12-Pt 7/16"
31416	3/8" Dr Dp Skt 12-Pt 1/2"
31416	3/8" Dr Dp Skt 12-Pt 1/2"
31418	3/8" Dr Dp Skt 12-Pt 9/16"
31418	3/8" Dr Dp Skt 12-Pt 9/16"
31420	3/8" Dr Dp Skt 12-Pt 5/8"
31420	3/8" Dr Dp Skt 12-Pt 5/8"

Product Code	Description
31422	3/8" Dr Dp Skt 12-Pt1 1/16"
31422	3/8" Dr Dp Skt 12-Pt1 1/16"
31424	3/8" Dr Dp Skt 12-Pt 3/4"
31424	3/8" Dr Dp Skt 12-Pt 3/4"
35100	3/8" Dr Hex Bit Skt 1/8"
35101	3/8" Dr Hex Bit Skt 9/64"
35102	3/8" Dr Hex Bit Skt 5/32"
35103	3/8" Dr Hex Bit Skt 3/16"
35104	3/8" Dr Hex Bit Skt 7/32"
35105	3/8" Dr Hex Bit Skt 1/4"
35106	3/8" Dr Hex Bit Skt 5/16"
35107	3/8" Dr Hex Bit Skt 3/8"
50609	23 Piece Basic Tool Set SAE
50615	58 Pc 3/8" Dr Skt Scr/Plr
50871	27" Top Chest
50901	27" Roll Cabinet
625	Carbide Scraper ergo® 1"
7723	Box Wr 12-Pt 3/8 X 7/16"
7725b	Box Wr 12-Pt 1/2 X 9/16"
BA-10A	3/8 Dr Hex Bit Skt 5/16"
BA-12A	3/8 Dr Hex Bit Skt 3/8"
BA-4A	3/8 Dr Hex Bit Skt 1/8"
BA-5A	3/8 Dr Hex Bit Skt 5/32"

Product Code	Description
BA-6A	3/8 Dr Hex Bit Skt 3/16"
BA-7A	3/8 Dr Hex Bit Skt 7/32"
BA-8A	3/8 Dr Hex Bit Skt 1/4"
BU-1212	3/8" Dr Univ Skt 12-Pt 3/8"
BU-1214	3/8" Dr Univ Skt 12-Pt 7/16"
BU-1216	3/8" Dr Univ Skt 12-Pt 1/2"
BU-1218	3/8" Dr Univ Skt 12-Pt 9/16"
BU-1220	3/8" Dr Univ Skt 12-Pt 5/8"
BU-1222	3/8" Dr Univ Skt 12-Pt 11/16"
BU-1224	3/8" Dr Univ Skt 12-Pt 3/4"
C-10	Cold Chisel 5/16"
C-16	Cold Chisel 1/2"
C-24	Cold Chisel 3/4"
gsc-12	Gasket Scraper-8-3/4 X 1 1/2"
P-15	Solid Punch 5/32" Point 5"
P-4	Pin Punch 1/8" Point 4-3/4"
P-40	Center Punch 3/8" Point 5"
P-6	Pin Punch 3/16" Point 5-1/4"
P-8	Pin Punch 1/4" Point 5-3/4"
ws-44	Hex Key Set 13 Piece

Contents: Intermediate Maintenance Service Set WSC-173TB

Refer to Master Set Section for Photo and Description

Note: WSC-173 Includes All Tools Only, Without Tool Storage Cabinets

Product Code	Description
1020	OE WR 1/4x5/16
1027B	OE WR 5/8x11/16
1037	OE WR 1-1/16x1-1/4
1038	OE WR 1-1/4x1-5/16
1033A	OE WR 7/8x15/16
1033C	OE WR 15/16x1
1037B	OE WR 1-1/8x1-3/16
11312	Midget Comb WR 12pt 3/8
11314	Midget Comb WR12pt 7/16
11316	Midget Comb WR12pt 1/2
11318	Midget Comb WR 12pt 9/16
11320	Midget Comb WR 12pt 5/8
11322	Midget Comb WR12pt 11/16
11324	Midget Comb WR12pt 3/4
1212SC	Comb WR 12pt 3/8
1214SC	Comb WR 12pt 7/16
1216SC	Comb WR 12pt 1/2

Product Code	Description
1218SC	Comb WR 12pt 9/16
1220SC	Comb WR 12pt 5/8
1222SC	Comb WR 12pt 11/16
1224SC	Comb WR 12pt 3/4
1226SC	Comb WR 12pt 13/16
1228SC	Comb WR 12pt 7/8
1230SC	Comb WR 12pt 15/16
1232SC	Comb WR 12pt 1
13408	Adj WR 8 Chr
1723	OE WR 3/8x7/16
1725B	OE WR 1/2x9/16
1731	OE WR 3/4x13/16
1-100-04-3-2	4 Hd SM File w/PlHdl
1-111-04-3-2	4 WRD SM File w/PlHdl
1-160-04-3-2	4 SQ SM File w/PlHdl
1-170-04-3-2	4 3 SQ SM File w/PlHdl
1-210-04-3-2	4 1/2RD SM File w/PlHdl

Product Code	Description
1-230-04-3-2	4 RD SM File w/PlHdl
23152	SideCut SlJt Pls 7-1/2
23503	Wire Stripper / Crimper
23612	Chn Nose PlsxL Nose 7-3/4
24401	3/16x3 Ntdrv Csh Gr
24403	1/4x3 Ntdrv Csh Gr
24405	5/16x3 Ntdrv Csh Gr
24407	11/32x3 Ntdrv Csh Gr
24409	3/8x3 Ntdrv Csh Gr
24411	7/16x3 Ntdrv Csh Gr
24413	1/2x3 Ntdrv Csh Gr
2744	Multi Purpose Shear
28201	Metal Shear Left
28203	Metal Shear Right
28205	Metal Shear Str
28449	Pch / Chs Holder
325	Hacksaw

Product Code	Description
625	Scraper
7723	BxWR 12pt 3/8x7/16
7725B	BxWR 12pt 1/2x9/16
B-1208	3/8Dr Skt12pt 1/4
B-1210	3/8Dr Skt12pt 5/16
B-1211	3/8Dr Skt12pt 11/32
B-1212	3/8Dr Skt12pt 3/8
B-1214	3/8Dr Skt12pt 7/16
B-1216	3/8Dr Skt12pt 1/2
B-1218	3/8Dr Skt12pt 9/16
B-1220	3/8Dr Skt12pt 5/8
B-1222	3/8Dr Skt12pt 11/16
B-1224	3/8Dr Skt12pt 3/4
B-1226	3/8Dr Skt12pt 13/16
B-1228	3/8Dr Skt12pt 7/8
B-108	3/8Dr Ext 3
B-110	3/8Dr Ext 6

Product Code	Description
B-140A	3/8Dr U-Joint
B-40A	3/8Dr FlHdl
B-52EHA	3/8Dr Encl Hd Rat 7-3/
BA-10A	3/8Dr HexBtSkt 5/16
BA-12A	3/8Dr HexBtSkt 3/8
BA-4A	3/8Dr HexBtSkt 1/8
BA-5A	3/8Dr HexBtSkt 5/32
BA-6A	3/8Dr HexBtSkt 3/16
BA-7A	3/8Dr HexBtSkt 7/32
BA-8A	3/8Dr HexBtSkt 1/4
BD-1208	3/8Dr Dp Skt12pt 1/4
BD-1210	3/8Dr Dp Skt12pt 5/16
BD-1212	3/8Dr Dp Skt12pt 3/8
BD-1214	3/8Dr Dp Skt12pt 7/16
BD-1216	3/8Dr Dp Skt12pt 1/2
BD-1218	3/8Dr Dp Skt12pt 9/16
BD-1220	3/8Dr Dp Skt12pt 5/8

Contents: Intermediate Maintenance Service Set WSC-173TB (con't)

Product Code	Description
BD-1222	3/8Dr Dp Skt12pt11/16
BD-1224	3/8Dr Dp Skt12pt 3/4
BD-1226	3/8Dr Dp Skt12pt13/16
BD-1228	3/8Dr Dp Skt12pt 7/8
BU-1212	3/8Dr U-Skt12pt 3/8
BU-1214	3/8Dr U-Skt12pt 7/16
BU-1216	3/8Dr U-Skt12pt 1/2
BU-1218	3/8Dr U-Skt12pt 9/16
BU-1220	3/8Dr U-Skt12pt 5/8
BU-1222	3/8Dr U-Skt12pt 1/1/16
BU-1224	3/8Dr U-Skt12pt 3/4
C-12	Cd Chs 3/8
C-15	Cd Chs 7/16
C-24	Cd Chs 3/4
GSC-12	GsktScpr-8-3/4x1 1/2
HBP-2-0	Bl PN Hmr 12oz
HK-050	L-Type Hex Key 050
HK-1/16	L-Type Hex Key 1/16

Product Code	Description
HK-1/4	L-Type Hex Key 1/4
HK-1/8	L-Type Hex Key 1/8
HK-3/16	L-Type Hex Key 3/16
HK-3/32	L-Type Hex Key 3/32
HK-3/8	L-Type Hex Key 3/8
HK-5/32	L-Type Hex Key 5/32
HK-5/64	L-Type Hex Key 5/64
HK-7/32	L-Type Hex Key 7/32
HK-7/64	L-Type Hex Key 7/64
HK-9/64	L-Type Hex Key 9/64
M-1208	1/4Dr Skt12pt 1/4
M-1210	1/4Dr Skt12pt 5/16
M-1211	1/4Dr Skt12pt 11/32
M-1212	1/4Dr Skt12pt 3/8
M-1214	1/4Dr Skt12pt 7/16
M-1216	1/4Dr Skt12pt 1/2
M-1218	1/4Dr Skt12pt 9/16
M-102	1/4Dr Ext 2

Product Code	Description
M-104	1/4Dr Ext 4
M-106A	1/4Dr Spinner Hdle
M-115	1/4Dr Ext 6
M-140A	1/4Dr U-Joint
M-52EHA	1/4Dr Encl Hd Ratchet 5
MD-1210	1/4Dr Dp Skt12pt 5/16
MD-1211	1/4Dr Dp Skt12pt 11/3
MD-1212	1/4Dr Dp Skt12pt 3/8
MD-1214	1/4Dr Dp Skt12pt 7/16
MD-1216	1/4Dr Dp Skt12pt 1/2
MD-1218	1/4Dr Dp Skt12pt 9/16
P-10	Pinpch 5/16 PT 6
P-14	Sldpch 1/8 PT 5
P-16	Sldpch 3/16 PT 5
P-18	Sldpch 3/8 PT 5
P-39	Centerpch5/16PT4-1/4
P-4	Pinpch 1/8 PT 4-3/4
P-40	Centerpch 3/8 PT 5

Product Code	Description
P-6	Pinpch 3/16 PT 5-1/4
PL-47C	Diag Cut Pls Reg 7
PL-57C	Diag Cut Pls Hi Lvrg
S-102P	1/2Dr Ext 2
S-110P	1/2Dr Ext 5-1/2
S-140A	1/2Dr U-Joint
S-41AA	1/2Dr FlHdl 17
S-52EHA	1/2Dr Encl Hd Rat 7-3/
SDE-43	Scr Electr 3
SDP-1-3	Scr Ph 1-Pt 3
SDP-2-4	Scr Ph 2-Pt 4
SDP-2-8	Scr Ph 2-Pt
SDR-22	Scr RD 3'
SDR-24	Scr RD 4
SDR-26	Scr RD 6
SDR-28	Scr RD 8
ST-1212	1/2Dr Skt12pt 3/8
ST-1214	1/2Dr Skt12pt 7/16

Product Code	Description
ST-1216	1/2Dr Skt12pt 1/2
ST-1218	1/2Dr Skt12pt 9/16
ST-1220	1/2Dr Skt12pt 5/8
ST-1222	1/2Dr Skt12pt 11/16
ST-1224	1/2Dr Skt12pt 3/4
ST-1226	1/2Dr Skt12pt 13/16
ST-1228	1/2Dr Skt12pt 7/8
ST-1230	1/2Dr Skt12pt 15/16
ST-1232	1/2Dr Skt12pt 1
ST-1234	1/2Dr Skt12pt 1-1/16
ST-1236	1/2Dr Skt12pt 1-1/8
ST-1238	1/2Dr Skt12pt 1-3/16
ST-1240	1/2Dr Skt12pt 1-1/4
ST-1242	1/2Dr Skt12pt 1-5/16
W26RC7	26" Roll Cabinet
W26TC4	26" Top Chest

Contents: Heavy Maintenance Service Set WSC-172TB

Refer to Master Set Section for Photo and Description

Note: WSC-172 Includes All Tools Only, Without Tool Storage Cabinets

Product Code	Description
1210SC	WRChrSat12pt 5/16
1212SC	WRChrSat12pt 3/8
1214SC	WRChrSat12pt 7/16
1216SC	WRChrSat12pt 1/2
1218SC	WRChrSat12pt 9/16
1220SC	WRChrSat12pt 5/8
1222SC	WRChrSat12pt 11/16
1224SC	WRChrSat12pt 3/4
1226SC	WRChrSat12pt 13/16
1228SC	WRChrSat12pt 7/8
1230SC	WRChrSat12pt 15/16
1232SC	WRChrSat12pt 1
1234SC	WRChrSat12pt 1-1/16
1236SC	WRChrSat12pt 1-1/8
1240SC	WRChrSat12pt 1-1/4
1242	WRChrSat12pt 1-5/16
1244	WRChrSat12pt 1 3/8
1246	WRChrSat12pt 1 7/16
1248	WRChrSat12pt 1 1/2
1180	WRChrSat12pt 1 5/8
1182	WRChrSat12pt 1 11/16
1184	WRChrSat12pt 1 3/4
1186	WRChrSat12pt 1 13/16

Product Code	Description
1188	WRChrSat12pt 1 7/8
1190	WRChrSat12pt 2
13408	Adj WR 8 Chr
13412	Adj WR 12 Chr
20542	Bl PN Hmr 8oz
20544	Bl PN Hmr 1 Lb
20652	CrPN Hmr 3 Lb
8033C	BxWR 12pt 15/16x1
8720	BxWR 12pt 1/4x5/16
8723	BxWR 12pt 3/8x7/16
8727	BxWR 12pt 9/16x5/8
8725B	BxWR 12pt 1/2x9/16
8727A	BxWR 12pt 5/8x11/16
8729A	BxWR 12pt11/16x13/1
8731A	BxWR 12pt 3/4x7/8
B-1211	3/8Dr Skt12pt 11/32
B-1208	Skt12pt 1/4
B-1210	Skt12pt 5/16
B-1212	Skt12pt 3/8
B-1214	Skt12pt 7/16
B-1216	Skt12pt 1/2
B-1218	Skt12pt 9/16
B-1220	Skt12pt 5/8

Product Code	Description
B-1222	Skt12pt 11/16
B-1224	Skt12pt 3/4
B-1226	Skt12pt 13/16
B-1228	Skt12pt 7/8
B-1230	Skt12pt 15/16
B-1232	Skt12pt 1
B-140A	3/8Dr U-Joint
B-40A	3/8Dr FlHdl
B-52EHA	3/8Dr EncHd Rat 8
C-126	x-Lg Cd Chs 3/4 Flat 18
C-10	Cd Chs 5 StSz 5/16
C-16	Cd Chs 6 StSz 3/8
C-28	Cd Chs 7/8
C-24	Cd Chs 7 StSz 5/8
C-62	Diamond PT Chs 3/8
C-718	Roll Bar
C-82	Pch Bar 3/4 Flat 15-7/8
CC-404C	C-Cl Cpr Screw 4
CC-406C	C-Cl Cpr Screw 6
CW-4	Chain WR
H-1232	3/4Dr Skt12pt 1
H-1234	3/4Dr Skt12pt 1-1/16
H-1236	3/4Dr Skt12pt 1-1/8

Product Code	Description
H-1240	3/4Dr Skt12pt 1-1/4
H-1242	3/4Dr Skt12pt 1-5/16
H-1244	3/4Dr Skt12pt 1-3/8
H-1246	3/4Dr Skt12pt 1-7/16
H-1248	3/4Dr Skt12pt 1-1/2
H-1252	3/4Dr Skt12pt 1-5/8
H-1254	3/4Dr Skt12pt 1-11/16
H-1256	3/4Dr Skt12pt 1-3/4
H-104	3/4Dr Ext 3
H-110	3/4Dr Ext 8
H-51B	3/4Dr Rev Ratchet 20
HSF-150A	Hmr Body 12oz 1-1/2
HSF-15M	Hmr Tip Medium 1-1/2
HSF-15T	Hmr Tip Tough 1-1/2
P-14	Sldpch 1/8 PT 5
P-17	Sldpch 1/4 PT 5
P-15	Sldpch 5 StSz 3/8
P-28	LgTprPch 1/4 PT 12
P-32	Prickpch 1/2 PT 6
P-4	Pinpch 5 StSz 5/16
P-40	Centerpch 5 StSz 3/8
P-6	Pinpch 5-1/2 StSz 5/16
P-8	Pinpch 7 StSz 3/8

Product Code	Description
RFW-12	Rat FL NUT WR 3/8
RFW-14	Rat FL NUT WR 7/16
RFW-16	Rat FL NUT WR 1/2
RFW-18	Rat FL NUT WR 9/16
RFW-20	Rat FL NUT WR 5/8
S-102P	1/2Dr Ext 2
S-15A	1/2Dr Speeder 18-7/8
S-20A	1/2Dr Sliding T Hdle
S-60D	1/2Dr Stud Remover
SDP-1-3	Scr Ph 1-Pt 3
SDP-2-4	Scr Ph 2-Pt 4
SDP-3-6	Scr Ph 3-Pt 6
SDP-4-6	Scr Ph 4-Pt 6
SDS-2-ST	Scr Ph 2-Pt S
SDR-24	Sl-Rd Shank-4 (1/4)
SDS-26	Sl-Sq Shank-6 (5/16)
SDS-28	Sl-Sq Shank-8 (3/8)
SDS-33	Sl-Sq Shank-12 (3/8)
SDS-62	Stby Sl Tip 1-1/2x1/4
WS-44	Hex Key Set 13-Pcs
W40RC7	40" Roll Cabinet

Contents: Electrical Maintenance Service Set WSC-167TB

Refer to Master Set Section for Photo and Description

Note: WSC-167 Includes All Tools Only, Without Tool Storage Cabinets

Product Code	Description
1112	Min OE WRChrSat 3/16
1113	Min OE WRChrSat 13/64
1114	Min OE WRChrSat 7/32
1115	Min OE WRChrSat 15/64
1116	Min OE WRChrSat 1/4
1118	Min OE WRChrSat 9/32
1120	Min OE WRChrSat 5/16
1122	Min OE WRChrSat 11/32
1124	Min OE WRChrSat 3/8
1128	Min OE WRChrSat 7/16
1132	Min OE WRChrSat 1/2

Product Code	Description
1136	Min OE WRChrSat 9/16
1140	Min OE WRChrSat 5/8
1210RC	Rev Rat Comb WR 5/16
1212RC	Rev Rat Comb WR 3/8
1214RC	Rev Rat Comb WR 7/16
1216RC	Rev Rat Comb WR 1/2
1218RC	Rev Rat Comb WR 9/16
1220RC	Rev Rat Comb WR 5/8
1222RC	Rev Rat Comb WR 11/16
1224RC	Rev Rat Comb WR 3/4
13406	6 Chr Adj WR - Pol Hd

Product Code	Description
20401	20oz Crv Claw Hmr
20544	16oz Bl PN Hmr
2101S-160+8	Diag Cut Pl Insul 6-1/4
2101S-180+8	Diag Cut Pl Ins 7
2101S-200+8	Diag Cut Pl Ins 8
2203-8	Diag Cut Pl Str 8
23152	Side-Cut Comb Pls -8
23303	Curv Lock-Pl Cutr10
23309	Lg Lock-Pl W/Ctr 6
23541	Elec Mini-Ctr 5-1/2
23542	Elec Mini-Stripper 5-1/2

Product Code	Description
23543	Elec Mini-Crimper 5-1/2
23503	FrEnd Strip-Cut/Crmp
23506	Hd Strp/Ctr 10-20
23512	12-2 14-2 Romex Strpr
23515	10-2 Romex Stripper
23521	Hd Strp/Ctr 22-30
23527	Multi-Purp Datacom Ctr
23530	Coax Cable Tl
23533	Cg Super Stripper 10-18
23535	Cg Super Stripper 20-30
2427S-200+8	60° Crv Nose Pl Ins 8

Product Code	Description
24401	3/16x3 Ntdrv Csh Gr
24403	1/4x3 Ntdrv Csh Gr
24405	5/16x3 Ntdrv Csh Gr
24407	11/32x3 Ntdrv Csh Gr
24409	3/8x3 Ntdrv Csh Gr
24411	7/16x3 Ntdrv Csh Gr
24413	1/2x3 Ntdrv Csh Gr
2520S	Cable Ctr Rubber Grs 23-5/8
2533-7	Lg Ns Pl Grs 7
2628S-200+8	Side Cut Comb Pl Ins Gr 8
2653-9	Lnms'S Pl Comf Gr 9 -1/2

Contents: Electrical Maintenance Service Set WSC-167TB (con't)

Product Code	Description
300-14-F15/16-HP	TIBx Saw PI14 15TPI
325+8	Prof Hksw Hdle 12
3830-22-VIP	Bi Holesaw 7/8
3830-29-VIP	Bi Holesaw 1 1/8
3830-35-VIP	Bi Holesaw 1 3/8
3830-44-VIP	Bi Holesaw 1 3/4
3830-51-VIP	Bi Holesaw 2
3830-64-VIP	Bi Holesaw 2 1/2
3834-ARBR-730	Hlsw Arb Fits 9/16 To 1 3/16
3834-ARBR-1152QC	Hlsw Arb Fits 1 1/4 To 6
3834-ExT-1	Holesaw Ext
3840-100-6-ST-1P	BiRecipBL 4 6TPI U-Thg
3840-100-18-SC-1P	BiRecipBL 4 18TPI
3840-150-5/8-SL-1P	BiRecipBL 6 5/8TPI
3840-150-14-ST-1P	BiRecipBL 6 14TPI U-Thg
3840-150-24-ST-1P	BiRecipBL 6 24TPI U-Thg
3840-100-10-SC-1P	BiRecipBL 4 10TPI
3840-100-24-ST-1P	BiRecipBL 4 24TPI U-Thg

Product Code	Description
3840-150-10-ST-1P	BiRecipBL 6 10TPI U-Thg
3840-150-18-ST-1P	BiRecipBL 6 18TPI U-Thg
3840-150-7-SL-1P	BiRecipBL 6 7TPI
3906-300-18-10P	10P Hksw Bl
40052	Qkbld Autoload Ut Kn
40058	Fldg Ut Knife
40072	QckBl DispBulk
40150	Tel Pick-Up Tl
40251	4pc Ut Tl Set
8223+8	Adj Joint Pls 8
8224+8	Adj Joint Pls 10
850002	Tape Rule 1x30
B-1208	3/8Dr Skt12pt 1/4
B-1210	3/8Dr Skt12pt 5/16
B-1212	3/8Dr Skt12pt 3/8
B-1214	3/8Dr Skt12pt 7/16
B-1216	3/8Dr Skt12pt 1/2
B-1218	3/8Dr Skt12pt 9/16

Product Code	Description
B-1220	3/8Dr Skt12pt 5/8
B-1222	3/8Dr Skt12pt 11/16
B-1224	3/8Dr Skt12pt 3/4
B-108	3/8Dr Ext 3
B-52EHA	3/8Dr Encl Hd Rat 8
BA-4LA	Lg HexBtSkt 1/8
BA-5LA	Lg HexBtSkt 5/32
BA-6LA	Lg HexBtSkt 3/16
BA-7LA	Lg HexBtSkt 7/32
BA-8LA	Lg HexBtSkt 1/4
BA-10LA	Lg HexBtSkt 5/16
BA-12LA	Lg HexBtSkt 3/8
BB-526	3/8Dr Penta-Skt
BE-8020	Sl Scr 2x1/8 Tip 6
BE-8040	Sl Scr 4x5/32xtip 8 3/4
BE-8150	Sl Scr 4x7/32xtip 8 3/4
BE-8155	Sl Scr 5x1/4 Tip9 3/46
BE-8610	Ph Scr 3x1 Pt 7 3/4

Product Code	Description
BE-8620	Ph Scr 4x2 Pt 8 3/4
BE-8010S	Scr Ins Sl 7x3x1/8
BE-8050S	Scr Ins Sl 8-3/4x4x5/32
BE-8065S	Scr Ins Sl Ergo13-1/2x7x1/4
BE-8230S	Scr Ins Sl 9-3/4x5x1/8
BE-8255S	Scr Ins Sl 11-3/4x7x3/16
BE-8600S	Scr Ins Ph® 0-Pt 7
BE-8610S	Scr Ins Ph® 1-Pt 8
BE-8620S	Scr Ins Ph® 2-Pt 8-3/4
BE-8630S	Scr Ins Ph® 3-Pt 11-3/4
BE-8640S	Scr Ins Ph® 4-Pt 14-1/4
JHW-24	Deadblow Hmr 24oz
M-102	1/4Dr Ext 2
M-106A	1/4Dr Spinner Hdle
M-140A	1/4Dr U-Joint
M-52EHA	1/4Dr Encl Hd Ratchet 5
M-604	1/4Dr Skt6pt 1/8
M-605	Skt6pt 5/32

Product Code	Description
M-606	Skt6pt 3/16
M-607	Skt6pt 7/32
M-608	Skt6pt 1/4
M-609	Skt6pt 9/32
M-610	Skt6pt 5/16
M-611	Skt6pt 11/32
M-612	Skt6pt 3/8
M-614	Skt6pt 7/16
M-616	Skt6pt 1/2
M-618	Skt6pt 9/16
MB-131B	1/4Dr ADp 1/4 M & 3/8 F Blk
PC-6-DRY	Drywall Saw
PL1519C	Superjoint Pls 5
WRS-1	Rat Scrr
WS-44	Hex Key Set 13-Pcs
W40RC7	40" Roll Cabinet

Contents: Industrial Plumbing & Pipefitting Tool Set WSC-137TB

Refer to Master Set Section for Photo and Description

Note: WSC-137 Includes All Tools Only, Without Tool Storage Cabinets

Product Code	Description
1210RC	Rev Rat Comb WR 5/16
1212RC	Rev Rat Comb WR 3/8
1214RC	Rev Rat Comb WR 7/16
1216RC	Rev Rat Comb WR 1/2
1218RC	Rev Rat Comb WR 9/16
1210SC	WRChrSat12pt 5/16
1212SC	WRChrSat12pt 3/8
1214SC	WRChrSat12pt 7/16
1216SC	WRChrSat12pt 1/2
1218SC	WRChrSat12pt 9/16
1220RC	Rev Rat Comb WR 5/8
1222RC	Rev Rat Comb WR 11/16
1224RC	Rev Rat Comb WR 3/4
1220SC	WRChrSat12pt 5/8
1222SC	WRChrSat12pt 11/16
1224SC	WRChrSat12pt 3/4
1226SC	WRChrSat12pt 13/16
1228SC	WRChrSat12pt 7/8
1230SC	WRChrSat12pt 15/16
1232SC	WRChrSat12pt 1
1234SC	WRChrSat12pt 1-1/16
1236SC	WRChrSat12pt 1-1/8
1240SC	WRChrSat12pt 1-1/4
13415	15 Chr Adj WR - Pol Hd
13418	18 Chr Adj WR - Pol Hd

Product Code	Description
13522	12 Pipe Wr Cast HD
13526	18 Pipe Wr Cast HD
13510	24 Pipe Wr Alum HD
147	U-WR 41-3/4
20401	20oz Crv Claw Hmr
20651	48oz CrPN Hmr
21661	2pc PryBar
2213-8	Diagional Cut Pl Angled 8
23303	Curv Lock-PL Cutr10
23309	Lg Lock-PL W/Ctr 6
24205	Sl Scr 3/16x4
24217	Sl Scr 1/4x1 1/2
24219	Sl Scr 1/4x4
24237	Sl Scr 5/16x6
24241	Sl Scr 3/8x8
24249	Ph Scr # 1x3
24251	Ph Scr # 2x1 1/2
24253	Ph Scr # 2x4
2533-8	Lg Ns Pl Grs 8
28205	Av Snips Str Cut
28307	Str Snips 12
28449	Pch / Chs Holder
300-14-F15/16-HP	TIBx Saw PI14 15TPI
325+8	Prof Hksw Hdle 12
3830-22-VIP	Bi Holesaw 7/8

Product Code	Description
3830-29-VIP	Bi Holesaw 1 1/8
3830-35-VIP	Bi Holesaw 1 3/8
3830-44-VIP	Bi Holesaw 1 3/4
3830-51-VIP	Bi Holesaw 2
3830-64-VIP	Bi Holesaw 2 1/2
3834-ARBR-730	Hlsw Arb 9/16 - 1-3/16
3834-ARBR-1152QC	Hlsw Arb 1-1/4 to 6
3834-ExT-1	Holesaw Ext
3840-100-6-ST-1P	BiRecipBL 4 6TPI U-Thg
3840-100-18-SC-1P	BiRecipBL 4 18TPI
3840-150-5/8-SL-1P	BiRecipBL 6 5/8TPI
3840-150-14-ST-1P	BiRecipBL 6 14TPI U-Thg
3840-150-24-ST-1P	BiRecipBL 6 24TPI U-Thg
3840-100-10-SC-1P	BiRecipBL 4 10TPI
3840-100-24-ST-1P	BiRecipBL 4 24TPI U-Thg
3840-150-10-ST-1P	BiRecipBL 6 10TPI U-Thg
3840-150-18-ST-1P	BiRecipBL 6 18TPI U-Thg
3840-150-7-SL-1P	BiRecipBL 6 7TPI
3906-300-18-10P	10P Bi Hksw Bl
40052	Qkbld Autoload Ut Kn
40058	Fldg Ut Knife
40072	QckBl DispBulk
40150	Tel Pick-Up Tl
40251	4pc Ut Tl Set
40221	12 Strap WR

Product Code	Description
43603	Mini-Tube Ctr 5/8
43607	Tube Ctr 2-5/8
43618	Pl Hose Ctr
43621	Tube Bender 3/8 Cap
43631	45° FlaRg Tl
8226	Adj Joint Pls 16
8225+8	Adj Joint Pls 12
8231+8	Adj Jt Pls 8- X-W Jaw
850002	Tape Rule 1x30
87039	Stud Rem/Inst Housing
87040	Collet 1/2 NPT
87041	Collet 3/4 NPT
87042	Stud Rem/Inst Hsg
87043	Collet 1 NPT
87044	Collet 1 1/2 NPT
87035	Stud Rem/Inst Housing
87036	Collet 1/8 NPT
87037	Collet 1/4 NPT
87038	Collet 3/8 NPT
9031RUS	Blkx-Wide Adj WR 8
9070RPUS	Blk Adj/Pipe WR 6
9072RPUS	Blk Adj/Pipe WR 10
9073RPUS	Blk Adj/Pipe WR 12
C-10	Cd Chs 5 StSz 5/16
C-16	Cd Chs 6 StSz 3/8

Product Code	Description
C-24	Cd Chs 7 StSz 5/8
C-715	Roll Bar 16
CC-406C	C-Cl Cpr SCr 6
CW-4	Chain Wr
FJ-20	Flange Jacks Pair
GSC-12	GsktScpr-8-3/4x1 1/2
JHW-48	Deadblow Hmr 48oz
P-15	Sldpch 5 StSz 3/8
P-4	Pinpch 5 StSz 5/16
P-40	Centerpch 5 StSz 3/8
P-6	Pinpch 5-1/2 StSz 5/16
P-8	Pinpch 7 StSz 3/8
PC-6-DRY	Dry Wall Saw
PL-8C	Cb Slip-Joint Pls 8
RFW-12	Rat FL NUT WR 3/8
RFW-14	Rat FL NUT WR 7/16
RFW-16	Rat FL NUT WR 1/2
RFW-18	Rat FL NUT WR 9/16
RFW-20	Rat FL NUT WR 5/8
RFW-22	Rat FL NUT WR 11/16
RFW-24	Rat FL NUT WR 3/4
WRS-1	Rat Scr
W40RC7	40" Roll Cabinet

Contents: Maintenance Tool Set WSC-130TB

Refer to Master Set Section for Photo and Description

Note: WSC-130 Includes All Tools Only, Without Tool Storage Cabinets

Product Code	Description
1020	Open End Wr 1/4 X 5/16"
1033C	Open End Wr 15/16 X 1"
1037	Open End Wr 1-1/16 X 1-1/4"
1037B	Open End Wr 1-1/8 X 1-3/16"
11312	Stubby Combo Wr 3/8"
11314	Stubby Combo Wr 7/16"
11316	Stubby Combo Wr 1/2"
11318	Stubby Combo Wr 9/16"
11320	Stubby Combo Wr 5/8"

Product Code	Description
11322	Stubby Combo Wr 11/16"
11324	Stubby Combo Wr 3/4"
11961	Combo Wr Offset 15/16"
11962	Combo Wr Offset 1"
11990	Combo Wr Offset Set
1-476-04-3-2	File Set W/Plst Hdl 6-Pce
1723	Open End Wr 3/8 X 7/16"
1725	Open End Wr 7/16 X 1/2"
1725B	Open End Wr 1/2 X 9/16"

Product Code	Description
1727	Open End Wr 9/16 X 5/8"
1729B	Open End Wr 11/16 X 3/4"
1731B	Open End Wr 13/16 X 7/8"
20002	C-Clamp Copper Screw 2"
20006	C-Clamp Copper Screw 6"
20543	2 Oz Ball Pein Hammer
23605	6-1/4" Diagonal
23607	8" Diagonal - Piano Wire
24205	Scr 3/16X4" Rd Slotted

Product Code	Description
24217	Scr 1/4X1-1/2" Rd Slotted
24219	Scr 1/4X4" Rd Slotted
24237	Scr 5/16X6" Rd Slotted
24241	Scr 3/8X8" Rd Slotted
24249	Scr #1 X 3 Phillips®
24251	Scr #2 X 1-1/2 Phillips®
24253	Scr #2 X 4 Phillips®
24401	Ntdr 3/16 X 3" Csh Grip
24403	Ntdr 1/4 X 3" Csh Grip

Product Code	Description
24405	Ntdr 5/16 X 3" Csh Grip
24407	Ntdr 11/32 X 3" Csh Grip
24409	Ntdr 3/8 X 3" Csh Grip
24411	Ntdr 7/16 X 3" Csh Grip
24413	Ntdr 1/2 X 3" Csh Grip
28201	Av Snips Left Cut
28203	Av Snips Right Cut
28205	Av Snips Straight Cut
28251	3 Piece Av Snips Set

Contents: Maintenance Tool Set WSC-130TB (con't)

Product Code	Description
28449	Punch / Chisel Holder
306	Hacksaw Frame
30933	26 P 1/4" Dr Sck/Tool Set
31408	3/8" Dr Deep Sck 12-Pt 1/4"
31410	3/8" Dr Deep Sck 12-Pt 5/16"
31412	3/8" Dr Deep Sck 12-Pt 3/8"
31414	3/8" Dr Deep Sck 12-Pt 7/16"
31416	3/8" Dr Deep Sck 12-Pt 1/2"
31418	3/8" Dr Deep Sck 12-Pt 9/16"
31420	3/8" Dr Deep Sck 12-Pt 5/8"

Product Code	Description
31422	3/8" Dr Deep Sck 12-Pt11/16"
31424	3/8" Dr Deep Sck 12-Pt 3/4"
35100	3/8" Dr Hex Bit Sck 1/8"
35101	3/8" Dr Hex Bit Sck 9/64"
35102	3/8" Dr Hex Bit Sck 5/32"
35103	3/8" Dr Hex Bit Sck 3/16"
35104	3/8" Dr Hex Bit Sck 7/32"
35105	3/8" Dr Hex Bit Sck 1/4"
35106	3/8" Dr Hex Bit Sck 5/16"
35107	3/8" Dr Hex Bit Sck 3/8"

Product Code	Description
50609	23 Piece Basic Tool Set SAE
50615	58 Pce 3/8" Dr Sck Scr Pliers
50721	3 Drawer Cart
625	Carbide Scraper ergo® 1"
7723	Box Wr 12-Pt 3/8 X 7/16"
7725b	Box Wr 12-Pt 1/2 X 9/16"
BA-10A	3/8 Dr Hex Bit Sck 5/16"
BA-12A	3/8 Dr Hex Bit Sck 3/8"
BA-4A	3/8 Dr Hex Bit Sck 1/8"
BA-5A	3/8 Dr Hex Bit Sck 5/32"

Product Code	Description
BA-6A	3/8 Dr Hex Bit Sck 3/16"
BA-7A	3/8 Dr Hex Bit Sck 7/32"
BA-8A	3/8 Dr Hex Bit Sck 1/4"
BD-808	3/8" Dr Std Sck 8-Pt 1/4"
BD-810	3/8" Dr Std Sck 8-Pt 5/16"
BD-812	3/8" Dr Std Sck 8-Pt 3/8"
BD-814	3/8" Dr Std Sck 8-Pt 7/16"
BD-816	3/8" Dr Std Sck 8-Pt 1/2"
BD-818	3/8" Dr Std Sck 8-Pt 9/16"
BD-820	3/8" Dr Std Sck 8-Pt 5/8"

Product Code	Description
C-10	Cold Chisel 5/16"
C-16	Cold Chisel 1/2"
C-24	Cold Chisel 3/4"
gsc-12	Gasket Scraper-8-3/4 X 1 1/2"
P-15	Solid Punch 5/32" Point 5"
P-4	Pin Punch 1/8" Point. 4-3/4"
P-40	Center Punch 3/8" Point 5"
P-6	Pin Punch 3/16" Point 5-1/4"
P-8	Pin Punch 1/4" Point 5-3/4"
ws-44	Hex Key Set 13 Piece

Contents: Basic Machine Repair Set WSC-102TB

Refer to Master Set Section for Photo and Description

Note: WSC-102 Includes All Tools Only, Without Tool Storage Cabinets

Product Code	Description
1210SC	WRChrSat12pt 5/16
1212SC	WRChrSat12pt 3/8
1214SC	WRChrSat12pt 7/16
1216SC	WRChrSat12pt 1/2
1218SC	WRChrSat12pt 9/16
1220SC	WRChrSat12pt 5/8
1222SC	WRChrSat12pt 11/16
1224SC	WRChrSat12pt 3/4
1226SC	WRChrSat12pt 13/16
1228SC	WRChrSat12pt 7/8
1230SC	WRChrSat12pt 15/16
1232SC	WRChrSat12pt 1
1234SC	WRChrSat12pt 1-1/16
1236SC	WRChrSat12pt 1-1/8
1240SC	WRChrSat12pt 1-1/4
13408	Adj WR 8 Chr
13412	Adj WR 12 Chr
20544	Bl PN Hmr 1 Lb

Product Code	Description
C-16	Cd Chs 1/2
C-24	Cd Chs 3/4
C-28	Cd Chs 7/8
C-82	Pch Bar 3/4 Flat 15-7/8
GS-1	Master Feeler Gauge Set
HSF-150A	Hmr Body 12oz 1-1/2
HSF-15N	Hmr Tip Med Hard 1-1/2
HSF-15T	Hmr Tip Tough 1-1/2
M-102	Ext 2
M-106	Spinner Hdle
M-140A	Univer Joint
M-1208	Skt12pt 1/4
M-1210	Skt12pt 5/16
M-1211	Skt12pt 11/32
M-1212	Skt12pt 3/8
M-1214	Skt12pt 7/16
M-1216	Skt12pt 1/2
M-1218	Skt12pt 9/16

Product Code	Description
M-42A	1/4Dr FlHdl
M-52EHA	Narrow Hd Ratchet 5 1/2
M-605	Skt6pt 5/32
M-606	Skt6pt 3/16
P-28	LgTprPch 1/4 PT 12
P-40	Centerpch 3/8 PT 5
P-8	Pinpch 1/4 PT 5-3/4
PL-1515	Lock Rg Pls 8
PL-1520C	Ut Superjoint Pls 10
PL-1600C	Snap Rg Pls & Tips Set
PL-57C	Diag Cut Pls Hi Lvrg
PL-76C	Chn Nose Pls Lg Nose 6-1/
PL-8C	Comb Slip-Joint Pls 8
RFW-12	Rat FL NUT WR 3/8
RFW-14	Rat FL NUT WR 7/16
RFW-16	Rat FL NUT WR 1/2
RFW-18	Rat FL NUT WR 9/16
RFW-20	Rat FL NUT WR 5/8

Product Code	Description
S-110P	Ext 5
S-115P	Ext 10
S-140A	U-Joint
S-102P	1/2Dr Ext 2
S-15A	1/2Dr Speeder 18-7/8
S-20A	1/2Dr Sliding T Hdle
S-41AA	FlHdl 17
S-52EH	Narrow Hd Ratchet 10 3/8
S-60D	1/2Dr Stud Remover
SA-8A	HexBtSkt 1/4
SA-10A	HexBtSkt 5/16
SA-12A	HexBtSkt 3/8
SA-16A	HexBtSkt 1/2
SA-18A	HexBtSkt 9/16
SA-20A	HexBtSkt 5/8
SDP-1-3	Scr Ph 1-Pt 3
SDP-2-4	Scr Ph 2-Pt 4
SDP-3-6	Scr Ph 3-Pt 6

Product Code	Description
SDR-24	Sl-rd Shank-4 (1/4)
SDS-26	Sl-SQ Shank-6 (5/16)
ST-1212	1/2Dr Skt12pt 3/8
ST-1234	1/2Dr Skt12pt 1-1/16
ST-1236	1/2Dr Skt12pt 1-1/8
ST-1240	1/2Dr Skt12pt 1-1/4
ST-1214	Skt12pt 7/16
ST-1216	Skt12pt 7/16
ST-1218	Skt12pt 7/16
ST-1220	Skt12pt 7/16
ST-1222	Skt12pt 7/16
ST-1224	Skt12pt 7/16
ST-1226	Skt12pt 7/16
ST-1228	Skt12pt 7/16
ST-1230	Skt12pt 7/16
ST-1232	Skt12pt 7/16
WS-44	Hex Key Set 13-Pcs
W26RC7	26" Roll Cabinet

Contents: Basic Electrical Repair Set WSC-95TB

Refer to Master Set Section for Photo and Description

Note: WSC-95 Includes All Tools Only, Without Tool Storage Cabinets

Product Code	Description
1112	Min OE WRChrSat 3/16
1113	Min OE WRChrSat 13/64
1114	Min OE WRChrSat 7/32
1115	Min OE WRChrSat 15/64
1116	Min OE WRChrSat 1/4
1118	Min OE WRChrSat 9/32
1120	Min OE WRChrSat 5/16
1122	Min OE WRChrSat 11/32
1124	Min OE WRChrSat 3/8
1128	Min OE WRChrSat 7/16
1132	Min OE WRChrSat 1/2
1136	Min OE WRChrSat 9/16
1140	Min OE WRChrSat 5/8
13406	Adj WR 6 Chr
20541	Bl PN Hmr 4oz
2101S-160	Diag Cut Pl Insul 6-1/4
2101S-200	Diag Cut Pl Ins 8

Product Code	Description
2203-8	Diag Cut Pl Str 8x-Wide Hdl
23152	SideCut SlJt Pls 7-
23503	FrEnd Strip-Cut/Crmp
23506	Hd Strp/Ctr 10-20
23533	Cg Super Stripper 10-18
23535	Cg Super Stripper 20-30
2427S-200	60° Crv Nose Pl Ins 8
24401	3/16 Csh Gr Ntdrv
24403	1/4 Csh Gr Ntdrv
24405	5/16 Csh Gr Ntdrv
24407	11/32 Csh Gr Ntdrv
24409	3/8 Csh Gr Ntdrv
24411	7/16 Csh Gr Ntdrv
24413	1/2 Csh Gr Ntdrv
2533-7	Lg Ns Pl Grs 7
2628S-200	Side Cut Comb Pl Ins Gr 8
2653-9	Lnms'S Pl Comf Gr 9 -1/2

Product Code	Description
50721	3Drw 34 Cart-Rb Red
8224	Adj Joint Pls 10
B-1208	3/8Dr Skt12pt 1/4
B-1210	3/8Dr Skt12pt 5/16
B-1211	3/8Dr Skt12pt 11/32
B-1212	3/8Dr Skt12pt 3/8
B-1214	3/8Dr Skt12pt 7/16
B-1216	3/8Dr Skt12pt 1/2
B-1218	3/8Dr Skt12pt 9/16
B-1220	3/8Dr Skt12pt 5/8
B-1222	3/8Dr Skt12pt 11/16
B-1224	3/8Dr Skt12pt 3/4
B-108	3/8Dr Ext 3
B-52EHA	3/8Dr EncHd Rat 8
BE-8020	Sl Scr 2x1/8 Tip 6
BE-8040	Sl Scr 4x5/32xTip 8 3/4
BE-8150	Sl Scr 4x7/32xTip 8 3/4

Product Code	Description
BE-8155	Sl Scr 5x1/4 Tip9 3/46
BE-8610	Ph Scr 3x1 PT 7 3/4
BE-8620	Ph Scr 4x2 PT 8 3/4
BE-8010S	Scr Ins Sl 7x3x1/8
BE-8050S	Scr Ins Sl 8-3/4x4x5/32
BE-8065S	Scr Ins Sl Ergo13-1/2x7x1/4
BE-8230S	Scr Ins Sl 9-3/4x5x1/8
BE-8255S	Scr Ins Sl 11-3/4x7x3/16
BE-8600S	Scr Ins Ph® 0-Pt 7
BE-8610S	Scr Ins Ph® 1-Pt 8
BE-8620S	Scr Ins Ph® 2-Pt 8-3/4
BE-8630S	Scr Ins Ph® 3-Pt 11-3/4
BE-8640S	Scr Ins Ph® 4-Pt 14-1/4
M-102	1/4Dr Ext 2
M-106A	1/4Dr Spinner Hdle
M-140A	1/4Dr U-Joint
M-52EHA	1/4Dr Encl Hd Ratchet 5

Product Code	Description
M-604	1/4Dr Skt6pt 1/8
M-605	Skt6pt 5/32
M-606	Skt6pt 3/16
M-607	Skt6pt 7/32
M-608	Skt6pt 1/4
M-609	Skt6pt 9/32
M-610	Skt6pt 5/16
M-611	Skt6pt 11/32
M-612	Skt6pt 3/8
M-614	Skt6pt 7/16
M-616	Skt6pt 1/2
M-618	Skt6pt 9/16
MB-131BA	1/4Dr Adp 1/4mx3/8f Blk
PL1519C	Superjoint Pls 5
WS-44	Hex Key Set 13-Pcs

Contents: General Industrial Repair Set WSC-88TB

Refer to Master Set Section for Photo and Description

Note: WSC-88 Includes All Tools Only, Without Tool Storage Cabinets

Product Code	Description
13406	Adj WR 6 Chr
13410	Adj WR 10 Chr
1210SC	WRChrSat12Pt 5/16
1212SC	WRChrSat12Pt 3/8
1214SC	WRChrSat12Pt 7/16
1216SC	WRChrSat12Pt 1/2
1218SC	WRChrSat12Pt 9/16
1220SC	WRChrSat12Pt 5/8
1222SC	WRChrSat12Pt 11/16
1224SC	WRChrSat12Pt 3/4
1226SC	WRChrSat12Pt 13/16
1228SC	WRChrSat12Pt 7/8
1230SC	WRChrSat12Pt 15/16
1232SC	WRChrSat12Pt 1
1234SC	WRChrSat12Pt 1-1/16
1236SC	WRChrSat12Pt 1-1/8

Product Code	Description
1240SC	WRChrSat12Pt 1-1/4
B-108	3/8Dr Ext 3
B-110	3/8Dr Ext 6
B-1208	Skt12Pt 1/4
B-1210	Skt12Pt 5/16
B-1211	3/8Dr Skt12Pt 11/32
B-1212	Skt12Pt 3/8
B-1214	Skt12Pt 7/16
B-1216	Skt12Pt 1/2
B-1218	Skt12Pt 9/16
B-1220	Skt12Pt 5/8
B-1222	Skt12Pt 11/16
B-1224	Skt12Pt 3/4
B-1226	Skt12Pt 13/16
B-1228	Skt12Pt 7/8
B-1230	Skt12Pt 15/16

Product Code	Description
B-1232	Skt12Pt 1
B-140A	3/8Dr U-Joint
B-40A	3/8Dr FlHdl
B-52EHA	3/8Dr EncHd Rat 8
CC-406C	C-Cl CPr Screw 6
GS-1	Master Feeler Gauge Set
PL-1520C	Ut SuPerjoint Pls 10
PL-46C	Diag Cut Pls Reg 6
PL-76C	Chn Nose Pls Lg Nose 6-1/
PL-8C	Comb SliP-Joint Pls 8
S-102P	1/2Dr Ext 2
S-110P	1/2Dr Ext 5-1/2
S-115P	1/2Dr Ext 10
S-140A	1/2Dr U-Joint
S-15A	1/2Dr SPeeder 18-7/8
S-20A	1/2Dr Sliding T Hdle

Product Code	Description
S-41AA	1/2Dr FlHdl 15-1/2
S-52EHA	1/2Dr Encl Hd Rat 10-3/8
SDP-1-3	Scr Ph 1-Pt 3
SDP-2-4	Scr Ph 2-Pt 4
SDP-3-6	Scr Ph 3-Pt 6
SDP-4-6	Scr Ph 4-Pt 6
SDR-24	Sl-Rd Shank-4 (1/4)
SDS-2-ST	Scr Ph 2-Pt
SDS-26	Sl-Sq Shank-6 (5/16)
SDS-33	Sl-Sq Shank-12 (3/8)
ST-1212	1/2Dr Skt12Pt 3/8
ST-1214	1/2Dr Skt12Pt 7/16
ST-1216	1/2Dr Skt12Pt 1/2
ST-1218	1/2Dr Skt12Pt 9/16
ST-1220	1/2Dr Skt12Pt 5/8
ST-1222	1/2Dr Skt12Pt 11/16

Product Code	Description
ST-1224	1/2Dr Skt12Pt 3/4
ST-1226	1/2Dr Skt12Pt 13/16
ST-1228	1/2Dr Skt12Pt 7/8
ST-1230	1/2Dr Skt12Pt 15/16
ST-1232	1/2Dr Skt12Pt 1
ST-1234	1/2Dr Skt12Pt 1-1/16
ST-1236	1/2Dr Skt12Pt 1-1/8
ST-1240	1/2Dr Skt12Pt 1-1/4
WS-44	Hex Key Set 13-Pcs
XFN-1214	Fl Nut WR 3/8x7/16
XFN-1618	Fl Nut WR 1/2x9/16
W26RC7	26 Roll Cabinet

Contents: General Service Set WSC-80TB

Refer to Master Set Section for Photo and Description

Note: WSC-80 Includes All Tools Only, Without Tool Storage Cabinets

Product Code	Description
1210SC	WRChrSat12pt 5/16
1212SC	WRChrSat12pt 3/8
1214SC	WRChrSat12pt 7/16
1216SC	WRChrSat12pt 1/2
1218SC	WRChrSat12pt 9/16
1220SC	WRChrSat12pt 5/8
1222SC	WRChrSat12pt 11/16
1224SC	WRChrSat12pt 3/4
1226SC	WRChrSat12pt 13/16
1228SC	WRChrSat12pt 7/8
1230SC	WRChrSat12pt 15/16
1232SC	WRChrSat12pt 1
1234SC	WRChrSat12pt 1-1/16
1236SC	WRChrSat12pt 1-1/8
1240SC	WRChrSat12pt 1-1/4
13406	6 Chr Adj WR - Pol Hd

Product Code	Description
13408	8 Chr Adj WR - Pol Hd
23150	Side-Cut Comb Pls -7
23503	FrEnd Strip-Cut/Crmp
50721	3Drw 34 Cart-Rb Red
B-1208	3/8Dr Skt12pt 1/4
B-1210	3/8Dr Skt12pt 5/16
B-1211	3/8Dr Skt12pt 11/32
B-1212	3/8Dr Skt12pt 3/8
B-1214	3/8Dr Skt12pt 7/16
B-1216	3/8Dr Skt12pt 1/2
B-1218	3/8Dr Skt12pt 9/16
B-1220	3/8Dr Skt12pt 5/8
B-1222	3/8Dr Skt12pt 11/16
B-1224	3/8Dr Skt12pt 3/4
B-108	3/8Dr Ext 3
B-110	3/8Dr Ext 6

Product Code	Description
B-115	3/8Dr Ext 11
B-140A	3/8Dr U-Joint
B-15	3/8Dr Speeder
B-20A	3/8Dr Sliding T Hdle
B-40A	3/8Dr FlHdl
B-52EHA	3/8Dr Encl Hd Rat 8
C-10	Cd Chs 5/16
C-16	Cd Chs 1/2
C-24	Cd Chs 3/4
GS-1	Master Feeler Gauge Set
HBP-2-0	Bl PN Hmr 12oz
P-15	Sldpch 5/32 Pt 5
P-4	Pinpch 1/8 Pt 4-3/4
P-40	Centerpch 3/8 Pt 5
P-6	Pinpch 3/16 Pt 5-1/4
P-8	Pinpch 1/4 Pt 5-3/4

Product Code	Description
PL-1519C	Ut Superjoint Pls 5
PL-1520C	Ut Superjoint Pls 10
PL-46C	Diag Cut Pls Reg 6
PL-76C	Chn Nose Pls Lg Nose
S-102P	1/2Dr Ext 2
S-110P	1/2Dr Ext 5
S-115P	1/2Dr Ext 10
S-140A	1/2Dr U-Joint
S-15A	1/2Dr Speeder 18-1/16
S-20A	1/2Dr Sliding T Hdle
S-41AA	1/2Dr FlHdl 15-1/2
S-52EH	1/2Dr Encl Hd Rat 10-3/8
SDP-2-4	Scrr Ph 2-Pt 4
SDR-24	Sl-rd Shk-4 (1/4)
SDS-26	Sl-Sq Shk-6 (5/16)
SDS-28	Sl-Sq Shk-8 (3/8)

Product Code	Description
SDS-62	Sl-Sq Shk-1-3/4 (1/4)
SP-3-6	Scrr Ph 3-Pt 6
ST-1212	1/2Dr Skt12pt 3/8
ST-1214	1/2Dr Skt12pt 7/16
ST-1216	1/2Dr Skt12pt 1/2
ST-1218	1/2Dr Skt12pt 9/16
ST-1220	1/2Dr Skt12pt 5/8
ST-1222	1/2Dr Skt12pt 11/16
ST-1224	1/2Dr Skt12pt 3/4
ST-1226	1/2Dr Skt12pt 13/16
ST-1228	1/2Dr Skt12pt 7/8
ST-1230	1/2Dr Skt12pt 15/16
ST-1232	1/2Dr Skt12pt 1
ST-1234	1/2Dr Skt12pt 1-1/16
ST-1236	1/2Dr Skt12pt 1-1/8
ST-1240	1/2Dr Skt12pt 1-1/4

Contents: Basic Service Set WSC-41TB

Refer to Master Set Section for Photo and Description

Note: WSC-41 Includes All Tools Only, Without Tool Storage Cabinets

Product Code	Description
1208SC	Comb WR 12pt 1/4
1210SC	Comb WR 12pt 5/16
1212SC	Comb WR 12pt 3/8
1214SC	Comb WR 12pt 7/16
1216SC	Comb WR 12pt 1/2
1218SC	Comb WR 12pt 9/16
1220SC	Comb WR 12pt 5/8
1222SC	Comb WR 12pt 11/16
1224SC	Comb WR 12pt 3/4

Product Code	Description
1226SC	Comb WR 12pt 13/16
13406	6 Chr Adj WR - Pol Hd
50721	3Drw 34 Cart-Rb Red
B-1208	3/8Dr Skt12pt 1/4
B-1210	3/8Dr Skt12pt 5/16
B-1211	3/8Dr Skt12pt 11/32
B-1212	3/8Dr Skt12pt 3/8
B-1214	3/8Dr Skt12pt 7/16
B-1216	3/8Dr Skt12pt 1/2

Product Code	Description
B-1218	3/8Dr Skt12pt 9/16
B-1220	3/8Dr Skt12pt 5/8
B-1222	3/8Dr Skt12pt 11/16
B-1224	3/8Dr Skt12pt 3/4
B-1226	3/8Dr Skt12pt 13/16
B-1228	3/8Dr Skt12pt 7/8
B-1230	3/8Dr Skt12pt 15/16
B-1232	3/8Dr Skt12pt 1
B-108	3/8Dr Ext 3

Product Code	Description
B-110	3/8Dr Ext 6
B-140A	3/8Dr U-Joint
B-40A	3/8Dr FlHdl
B-52A	3/8Dr Rnd Hd Rat7-5/8
C-16	Cd Chs 1/2
HP-12	Bl PN Hmr 12oz
P-38	Centerpch 1/4 Pt 3-7/8
P-6	Pinpch 3/16 Pt 5-1/4
PL-46C	Diag Cut Pls Reg 6

Product Code	Description
PL-76C	Chn Nose Pls Lg Nose 6-1/
PL-8C	Cb Slip-Joint Pls 8
SDP-2-4	Scrr Ph 2-Pt 4
SDR-24	Sl-rd Shk-4 (1/4)
SDS-26	Sl-Sq Shk-6 (5/16)

Contents: Metric Maintenance Service Set MSC-225TB

Refer to Master Set Section for Photo and Description

Note: MSC-225 Includes All Tools Only, Without Tool Storage Cabinets

Product Code	Description
1207MSC	Comb WR 12pt 7mm
1208MSC	Comb WR 12pt 8mm
1209MSC	Comb WR 12pt 9mm
1210MSC	Comb WR 12pt 10mm
1211MSC	Comb WR 12pt 11mm
1212MSC	Comb WR 12pt 12mm
1213MSC	Comb WR 12pt 13mm
1214MSC	Comb WR 12pt 14mm
1215MSC	Comb WR 12pt 15mm
1217MSC	Comb WR 12pt 17mm
1218MSC	Comb WR 12pt 18mm
1219MSC	Comb WR 12pt 19mm
1221MSC	Comb WR 12pt 21mm
1222MSC	Comb WR 12pt 22mm
1224MSC	Comb WR 12pt 24mm
13404	Adj WR 4 Chr
13408	Adj WR 8 Chr
13412	12 Chr Adj WR - Pol Hd
2503MFRMH	1/2Dr Cl Trq Wr 250 F-Lb
471	Adj Hk Spr 3/4 - 2
474	Adj Hk Spr 2 - 4-3/4
4M-613	1/2Dr ImSkt6pt 13mm
4M-614	1/2Dr ImSkt6pt 14mm
4M-615	1/2Dr ImSkt6pt 15mm
4M-616	1/2Dr ImSkt6pt 16mm
4M-617	1/2Dr ImSkt6pt 17mm
4M-618	1/2Dr ImSkt6pt 18mm
4M-619	1/2Dr ImSkt6pt 19mm
4M-621	1/2Dr ImSkt6pt 21mm
4M-622	1/2Dr ImSkt6pt 22mm
4M-624	1/2Dr ImSkt6pt 24mm
4M-627	1/2Dr ImSkt6pt 27mm
4M-630	1/2Dr ImSkt6pt 30mm
B-108	Ext 3
B-110	Ext 6
B-140A	U-Joint
B-101	3/8Dr Ext 1-1/2
B-115	3/8Dr Ext 10-1/2
B-15	3/8Dr Speeder
B-20A	3/8Dr Sliding T Hdle
B-40A	FlHdl 8 9/16
B-52EHA	Narrow Hd Ratchet 8

Product Code	Description
B-70	3/8Dr Ratchet Spinner
BFE-8	3/8Dr Flible Ext 8
BM-1220	3/8Dr Skt12pt 20mm
BM-1221	3/8Dr Skt12pt 21mm
BM-1222	3/8Dr Skt12pt 22mm
BM-1224	3/8Dr Skt12pt 24mm
BM-1208	3/8Dr Std12pt Skt 8 mm
BM-1209	3/8Dr Std12pt Skt 9 mm
BM-1210	3/8Dr Std12pt Skt 10 mm
BM-1211	3/8Dr Std12pt Skt 11 mm
BM-1212	3/8Dr Std12pt Skt 12 mm
BM-1213	3/8Dr Std12pt Skt 13 mm
BM-1214	3/8Dr Std12pt Skt 14 mm
BM-1215	3/8Dr Std12pt Skt 15 mm
BM-1216	3/8Dr Std12pt Skt 16 mm
BM-1217	3/8Dr Std12pt Skt 17 mm
BM-1218	3/8Dr Std12pt Skt 18 mm
BM-1219	3/8Dr Std12pt Skt 19 mm
BMD-608	3/8Dr Dp 6 PT Skt 8 mm
BMD-609	3/8Dr Dp 6 PT Skt 9 mm
BMD-610	3/8Dr Dp 6 PT Skt 10 mm
BMD-611	3/8Dr Dp 6 PT Skt 11 mm
BMD-612	3/8Dr Dp 6 PT Skt 12 mm
BMD-613	3/8Dr Dp 6 PT Skt 13 mm
BMD-614	3/8Dr Dp 6 PT Skt 14 mm
BMD-615	3/8Dr Dp 6 PT Skt 15 mm
BMD-616	3/8Dr Dp 6 PT Skt 16 mm
BMD-617	3/8Dr Dp 6 PT Skt 17 mm
BMD-618	3/8Dr Dp 6 PT Skt 8 mm
BMD-619	3/8Dr Dp 6 PT Skt 19 mm
C-10	Cd Chs 5 StSz 5/16
C-12	Cd Chs 5-1/4 StSz 5/16
C-16	Cd Chs 6 StSz 3/8
C-20	Cd Chs 6-1/2 StSz 1/2
C-24	Cd Chs 7 StSz 5/8
C-32	Cd Chs 5 StSz 3/8
C-42	Cape Chs 5 StSz 3/8
C-62	DmndPT Chs 6 1/2 StSz 5/8
C-715	RlBr 16
CW-4	Chain WR
HBP-2-0	Bl PN Hmr 12oz
HBP-4	Bl PN Hmr 2 Lb

Product Code	Description
HBP-5-0	Bl PN Hmr 4oz
HSF-155A	Hmr Body 1-1/4 Lb 1-1/2
HSF-15H	Hmr Tip Hard 1-1/2
HSF-15S	Hmr Tip Soft 1-1/2
M-102	Ext 2
M-115	Ext 6
M-106	Spinner Hdle
M-140A	U-Joint
M-20A	1/4Dr Sliding T Hdle
M-42A	1/4Dr FlHdl
M-52EH	Narrow Hd Ratchet 5 1/2
MM-604	Mm Skt6pt 4Mm
MM-605	Mm Skt6pt 5Mm
MM-6055	Mm Skt6pt 55Mm
MM-606	Mm Skt6pt 6Mm
MM-607	Mm Skt6pt 7Mm
MM-608	Mm Skt6pt 8Mm
MM-609	Mm Skt6pt 9Mm
MM-610	Mm Skt6pt 10Mm
MM-611	Mm Skt6pt 11Mm
MM-612	Mm Skt6pt 12Mm
MM-613	Mm Skt6pt 13Mm
MM-614	Mm Skt6pt 14Mm
MMD-604	1/4Dr Dp Skt6pt 4mm
MMD-605	1/4Dr Dp Skt6pt 5mm
MMD-606	1/4Dr Dp Skt6pt 6mm
MMD-607	1/4Dr Dp Skt6pt 7mm
MMD-608	1/4Dr Dp Skt6pt 8mm
MMD-609	1/4Dr Dp Skt6pt 9mm
MMD-610	1/4Dr Dp Skt6pt 10mm
MMD-611	1/4Dr Dp Skt6pt 11mm
MMD-612	1/4Dr Dp Skt6pt 12mm
MMD-613	1/4Dr Dp Skt6pt 13mm
MMD-614	1/4Dr Dp Skt6pt 14mm
MWS-27	Hex Key Set 11-Pcs
MWS-30	RatBxWR Set 5-Pc
MWS-47	Hex Key Set 7-Pcs
O-471	Adj Pin Spr 3/4 To 2
O-474	Adj Pin Spr 2 To 4-3/4
P-14	Sldpch 4-1/2 StSz 5/16
P-15	Sldpch 5 StSz 3/8
P-16	Sldpch 5 StSz 3/8

Product Code	Description
P-25	LgTprPch 8-1/2 StSz 1/2
P-28	LgTprPch 11 StSz 5/8
P-32	Prickpch 6 StSz 1/2
P-4	Pinpch 5 StSz 5/16
P-40	Centerpch 5 StSz 3/8
P-6	Pinpch 5-1/2 StSz 5/16
P-8	Pinpch 7 StSz 3/8
PL1519C	5 Ut Superjoint
PL-126C	Crv Chain Nose Pls 6-1/4
PL-1524C	Ut Superjoint Pls 16
PL-77C	Chn Nose PlsxL Nose 7-1
PL-8C	Comb Slip-Joint Pls 8
PL-46C	6 Diag Cut Pl
PL-76C	6 1/2 Chain Nose Side Ctr
PL-218C	8 1/4 Ctr Crimper
PL-370C	7 1/2 Side Cut Slip-Joing
PL-1520C	10 Ut Superjoint
S-15A	Speeder 18
S-102P	Ext 2
S-110P	Ext 5
S-115P	Ext 10
S-140A	U-Joint
S-20A	Sliding T Hdle
S-40AA	FlHdl 10 7/16
S-41AA	FlHdl 15 1/2
S-52EHA	EncHd ratchet 10 3/8
S-60D	Stud Remover
S-70	Ratchet Spinner
SDE-43	Scr Electr 3
SDE-46	Scr Electr 6
SDE-50	Scr Electr 10
SDE-53	Scr Electr 2-1/2
SDE-8	Scr Electr 8
SDP-1-3	Scr Ph 1-Pt 3
SDP-2-4	Scr Ph 2-Pt 4
SDP-3-6	Scr Ph 3-Pt 6
SDP-4-6	Scr Ph 4-Pt 6
SDR-24	Sl-Rd Shank-4 (1/4)
SDS-2-ST	Scr Ph 2-Pt
SDS-26	Sl-Sq Shank-6 (5/16)
SDS-28	Sl-Sq Shank-8 (3/8)
SDS-33	Sl-Sq Shank-12 (3/8)

Product Code	Description
SDS-62	Stby Sl Tip 1-1/2x1/4
SMD-1213	Mm Dp Skt12pt 13 Mm
SMD-1214	Mm Dp Skt12pt 14 Mm
SMD-1215	Mm Dp Skt12pt 15 Mm
SMD-1216	Mm Dp Skt12pt 16 Mm
SMD-1217	Mm Dp Skt12pt 17 Mm
SMD-1218	Mm Dp Skt12pt 18 Mm
SMD-1219	Mm Dp Skt12pt 19 Mm
SMD-1221	Mm Dp Skt12pt 21 Mm
SMD-1222	Mm Dp Skt12pt 22 Mm
SMD-1224	Mm Dp Skt12pt 24 Mm
SMD-1227	Mm Dp Skt12pt 27 Mm
SMD-1230	Mm Dp Skt12pt 30 Mm
STM-1210	1/2Dr Skt12pt 10mm
STM-1211	1/2Dr Skt12pt 11mm
STM-1212	1/2Dr Skt12pt 12mm
STM-1213	1/2Dr Skt12pt 13mm
STM-1214	1/2Dr Skt12pt 14mm
STM-1215	1/2Dr Skt12pt 15mm
STM-1216	1/2Dr Skt12pt 16mm
STM-1217	1/2Dr Skt12pt 17mm
STM-1218	1/2Dr Skt12pt 18mm
STM-1219	1/2Dr Skt12pt 19mm
STM-1220	1/2Dr Skt12pt 20mm
STM-1221	1/2Dr Skt12pt 21mm
STM-1222	1/2Dr Skt12pt 22mm
STM-1223	1/2Dr Skt12pt 23mm
STM-1224	1/2Dr Skt12pt 24mm
STM-1225	1/2Dr Skt12pt 25mm
STM-1226	1/2Dr Skt12pt 26mm
STM-1227	1/2Dr Skt12pt 27mm
STM-1228	1/2Dr Skt12pt 28mm
STM-1229	1/2Dr Skt12pt 29mm
STM-1230	1/2Dr Skt12pt 30mm
STM-1232	1/2Dr Skt12pt 32mm
STM-1234	1/2Dr Skt12pt 34mm
STM-1236	1/2Dr Skt12pt 36mm
W40RC7	40" Roll Cabinet

Contents: Metric Heavy Equipment Service Set MSC-118TB

Refer to Master Set Section for Photo and Description

Note: MSC-118 Includes All Tools Only, Without Tool Storage Cabinets

Product Code	Description
SDR-24	Sl-Rd Shank-4 (1/4)
W40RC7	40" Roll Carbinet
1207MSC	Comb WR 12pt 7mm
1208MSC	Comb WR 12pt 8mm
1209MSC	Comb WR 12pt 9mm
1210MSC	Comb WR 12pt 10mm
1211MSC	Comb WR 12pt 11mm
1212MSC	Comb WR 12pt 12mm
1213MSC	Comb WR 12pt 13mm
1214MSC	Comb WR 12pt 14mm
1215MSC	Comb WR 12pt 15mm
1217MSC	Comb WR 12pt 17mm
1218MSC	Comb WR 12pt 18mm
1219MSC	Comb WR 12pt 19mm
1221MSC	Comb WR 12pt 21mm
1222MSC	Comb WR 12pt 22mm
1224MSC	Comb WR 12pt 24mm
1227MSC	Comb WR 12pt 27mm
1230MSC	Comb WR 12pt 30mm
1232MSC	Comb WR 12pt 32mm
1236MSC	Comb WR 12pt 36mm

Product Code	Description
13408	8 Chr Adj WR - Pol Hd
13412	12 Chr Adj WR - Pol Hd
20544	16oz Bl PN Hmr
20545	24oz Bl PN Hmr
20651	48oz CrPN Hmr
B-108	3/8Dr Ext 3
B-110	3/8Dr Ext 6
B-15	3/8Dr Speeder
B-52EHA	3/8Dr Encl Hd Rat 8
BM-1208	3/8Dr Skt12pt 8mm
BM-1209	3/8Dr Skt12pt 9mm
BM-1210	3/8Dr Skt12pt 10mm
BM-1211	3/8Dr Skt12pt 11mm
BM-1212	3/8Dr Skt12pt 12mm
BM-1213	3/8Dr Skt12pt 13mm
BM-1214	3/8Dr Skt12pt 14mm
BM-1215	3/8Dr Skt12pt 15mm
BM-1216	3/8Dr Skt12pt 16mm
BM-1217	3/8Dr Skt12pt 17mm
BM-1218	3/8Dr Skt12pt 18mm
BM-1219	3/8Dr Skt12pt 19mm

Product Code	Description
BM-1220	3/8Dr Skt12pt 20mm
BM-1221	3/8Dr Skt12pt 21mm
BM-1222	3/8Dr Skt12pt 22mm
BM-1223	3/8Dr Skt12pt 23mm
BM-1224	3/8Dr Skt12pt 24mm
BS-131BA	3/8Dr ADp 1/2 Fx3/8 M
C-12	Cd Chs 3/8
C-24	Cd Chs 3/4
C-715	RlBr 16
C-715	RlBr 16
H-110	3/4Dr Ext 8
H-41AA	3/4Dr FlHdl Chr22-1/8
H-51B	3/4Dr Rev Ratchet 20-1/8
HM-1219	3/4Dr Skt12pt 19mm
HM-1222	3/4Dr Skt12pt 22mm
HM-1224	3/4Dr Skt12pt 24mm
HM-1227	3/4Dr Skt12pt 27mm
HM-1232	3/4Dr Skt12pt 32mm
HM-1236	3/4Dr Skt12pt 36mm
HM-1238	3/4Dr Skt12pt 38mm
HM-1241	3/4Dr Skt12pt 41mm

Product Code	Description
HM-1246	3/4Dr Skt12pt 46mm
HM-1250	3/4Dr Skt12pt 50mm
HM-1255	3/4Dr Skt12pt 55mm
HM-1260	3/4Dr Skt12pt 60mm
MWS-27	Hex Key Set 11-Pcs
MWS-47	Hex Key Set 7-Pcs
P-26	LgTprPch 3/16 Pt10
P-29	LgTprPch 5/16 Pt16
P-40	Centerpch 3/8 Pt 5
PL-1520C	Ut Superjoint Pls 10
PL-47C	Diag Cut Pls Reg 7
PL-6C	Cb Slip-Joint Pls 6
PL-76C	Chn Nose Pls Lg Nose 6-1/
S-115P	1/2Dr Ext 10
S-140A	1/2Dr U-Joint
S-52EHA	1/2Dr Encl Hd Rat 10-3/8
SDE-46	Scr Electr 6
SDE-8	Scr Electr 8
SDP-1-3	Scr Ph 1-Pt 3
SDP-2-4	Scr Ph 2-Pt 4
SDP-3-6	Scr Ph 3-Pt 6

Product Code	Description
SDP-4-6	Scr Ph 4-Pt 6
SDR-24	Sl-Rd Shank-4 (1/4)
SDS-26	Sl-Sq Shank-6 (5/16)
SDS-28	Sl-Sq Shank-8 (3/8)
SDS-33	Sl-Sq Shank-12 (3/8)
SH-131BA	1/2Dr ADptr 1/2 Mx3/4 F B
STM-1210	1/2Dr Skt12pt 10mm
STM-1211	1/2Dr Skt12pt 11mm
STM-1212	1/2Dr Skt12pt 12mm
STM-1213	1/2Dr Skt12pt 13mm
STM-1214	1/2Dr Skt12pt 14mm
STM-1215	1/2Dr Skt12pt 15mm
STM-1216	1/2Dr Skt12pt 16mm
STM-1217	1/2Dr Skt12pt 17mm
STM-1218	1/2Dr Skt12pt 18mm
STM-1219	1/2Dr Skt12pt 19mm
STM-1220	1/2Dr Skt12pt 20mm
STM-1221	1/2Dr Skt12pt 21mm
STM-1222	1/2Dr Skt12pt 22mm
W40RC7	40" Roll Carbinet

Safety

Important Words About Safety for Users and Bystanders

Following these basic safety rules is a good start toward protecting yourself — and others in the vicinity — from injury while using tools.

Wear safety goggles
Use the right tool
Use the tool properly
Maintain the tool regularly
Keep tools away from children
Do not use tools on live electrical circuits unless specifically designed for such use
Read and follow instructions

THIS SYMBOL INDICATES PROHIBITED ACTION

DO NOT OVER-TORQUE NO PIPES OR LEVER EXTENSIONS

NO HAMMERING

NO PRYING

DO NOT STRIKE HARD OBJECTS

NO IMPACT/POWER DRIVE

DO NOT STEP IN OR ON DRAWERS

DO NOT OPEN MULTIPLE DRAWERS

DO NOT PULL TO MOVE

KEEP CHILDREN AWAY

THIS SYMBOL INDICATES MANDATORY ACTION

MANDATORY EAR PROTECTION

MANDATORY FACE SHIELD

MANDATORY MASK

MANDATORY RESPIRATOR

MANDATORY PROTECTIVE CLOTHING

MANDATORY PROTECTIVE GLOVES

MANDATORY EYE PROTECTION

MUST READ INSTRUCTIONS BEFORE USE

THIS SYMBOL INDICATES A HAZARD ALERT
RED BACKGROUND – DANGER
ORANGE BACKGROUND – WARNING
YELLOW BACKGROUND – CAUTION

VIBRATION HAZARD

RISK OF EXPLOSION

OVERHEAD/ OVERLOAD HAZARD

RISK OF ELECTRIC SHOCK

RISK OF FIRE

RISK OF ENTANGLEMENT

Safety messages in this catalog use the guidelines of the American National Standard ANSI Z535.4 for Product Safety Signs and Labels and ANSI Z535.3 Criteria for Safety Symbols. Messages associated with specific products use a triangular hazard alert symbol, signal word (CAUTION, WARNING, DANGER) and how to avoid the hazard. Each message refers to pages (473-474) which provides additional safety symbols and three-part messages advising of:

- The hazard
- **How to avoid the hazard**
- *The probable consequence of not avoiding the hazard*

PLEASE READ AND FOLLOW these messages to avoid injury to yourself and bystanders.

Electrical, Electronic Service
(pliers, cutters, mini-torch)

WARNING

- Broken tips or cut material can fly.

Wear safety shield. (User and bystanders)
Flying material can cause injury.

- Material can cause sparks or flying particles when heated.

Wear safety goggles. (User and bystanders)
Sparks and flying particles can cause injury.

- Butane will explode or burn when ignited.

Do not store butane at a temperature above 120°.
Hold Butane away from body and face.
Explosion or flames can cause injury.

- Electrical shock hazard.

Do not use on live electrical circuits.
Electrical shock can cause injury.

Extractors

WARNING

- Drilling pilot holes, inserting extractors and using extractors can cause flying chips. Extractors can break if overloaded.

Wear safety goggles. (User and bystanders)
For hand use only.
Flying chips and broken tools can cause injury.

Gear Head Torque Multipliers

WARNING

- Use of gear head torque multipliers for torque control may result in inaccurate torque application.

For accurate control of torque use an Electrotork®, a Torqometer® or other measuring device located directly on the fastener.
Limited accuracy of the torque ratio of a gear head torque multiplier may cause improper preload of the fastener if it is used for torque control.

Hand Tools

WARNING

- Chrome and industrial finish hand tools can break if overloaded or used for the wrong application.

Wear safety goggles. (User and bystanders)
Do not use chrome or industrial finish hand tools with power drivers.
Use only impact sockets and accessories with impact wrenches.
Use only power sockets and accessories with power wrenches.
Broken hand tools, sockets or accessories can cause injury.

- Electrical shock hazard.

Do not use on live electrical circuits.
Electrical shock can cause injury.

Impact Drivers

WARNING

- Impact drivers can cause tool breakage or flying objects.

Wear safety goggles. (User and bystanders)
Flying objects can cause injury.
Wear hearing protection. (User and bystanders)

Knives

WARNING

- Blades are sharp and can cut. Blades can break causing flying objects.

Wear safety goggles. (User and bystanders)
Do not pry or bend blade.
Keep away from children.
Sharp edges and flying objects can cause injury.

Nut Splitters

WARNING

- Use of impact wrench can cause nut splitter to break.

Wear safety goggles. (User and bystanders)
Do not use with impact wrench.
Broken tools can cause injury.

Plastic Handled Tools

WARNING

- Plastic handles do not protect from electrical shock.

Do not use on live electrical circuits.
Electrical shock can cause injury.

Pliers/Cutters

WARNING

- Broken tips or cut material can fly.

Wear safety goggles. (User and bystanders)
Flying material can cause injury.

Prybars

WARNING

- Prying can cause flying chips. Chipped or cracked prybars can cause flying chips. Prybars can chip if struck.

Wear safety goggles. (User and bystanders)
Do not use pipe or lever extension.
Do not use a prybar if chipped or cracked.
Do not use a prybar as a punch or hammer.
Flying chips can cause injury.

Pullers, Presses

WARNING

- Puller parts under stress can break.

Wear safety goggles. (User and bystanders)
Broken parts can cause injury.

Ratchets

WARNING

- Ratchet mechanism may slip or break if dirty. Mismatched or partially worn parts can cause ratchet to slip or break.

Frequently inspect, clean and lubricate all non-sealed ratchet mechanisms with light oil.
Do not immerse sealed ratchet in fluids.
Do not replace worn parts individually, use entire contents of the service kit.
Ratchets that slip or break can cause injury.

Riveting, Sanding, Door Tools

WARNING

- Riveting and nut setting tools can cause flying chips.

Wear safety goggles. (User and bystanders)
Flying chips can cause injuries.

Scrapers

WARNING

- Scrapers and putty knives can break if used for prying or chiseling.

Wear safety goggles. (User and bystanders)
Do not use a scraper or putty knife as a prybar or chisel.
Broken tools can cause injury.

Screwdrivers

WARNING

- Screwdrivers can break if used as prybar, chisel or punch.

Wear safety goggles. (User and bystanders)
Do not use a screwdriver as a prybar, chisel or punch.
Broken screwdriver can cause injury.

Socket Usage

Select the proper type of socket for the application.

WARNING

- **Hand Sockets** - All chrome plated sockets and black finished sockets identified as hand sockets are for hand use only.
- **Impact Sockets** - Sockets designed for durability when used with impact drivers; use only impact sockets with impact drivers.

Wear safety goggles. (Users and bystanders)
Broken tools can cause injury.

Storage Units

WARNING

- Storage units can tip or strike you.

Do not open more than one loaded drawer at a time.
Keep children away.
Close lid and lock drawers and doors before moving.
Apply brakes on locking casters when not moving unit.
Do not step in or on drawers.
Secure units together with fasteners.
Read and follow instruction manual.
Tipping of storage unit or unit striking you can cause injury.

- Units edges can cut or pinch.

Do not pull; push to move.
Wear gloves when lifting by edges.
Keep feet and fingers clear of edges when stacking, hanging or moving units.
Unit edges can cause injury.

Striking and Struck Tools, Punches/Chisels

WARNING

- Striking and struck tools can break or chip. Chipped or mushroomed punch and chisel ends or metal weakened by improper grinding can fragment.

Oversized hammer can chip the punch or chisel.
Wear safety goggles. (Users and bystanders)
Do not use punch or chisel having mushroomed ends; dress edges or mushroomed ends to original shape with a hand file.
Hammer head diameter should be approximately 3/8" larger than head of punch or chisel.
Flying objects can cause injury.

- Steel punches and chisels can cause sparks during use.

Do not use near flammable substance.
Flammable substances can ignite causing injury.

Hammers

WARNING

- Hammers can cause flying chips. Chipped, mushroomed or cracked hammers can cause flying chips. Glancing blows can cause flying chips. Striking hard surface can cause flying chips. Body hammers can chip or break if struck against hard surfaces.

Wear safety goggles. (Users and bystanders)
Do not use chipped, mushroomed or cracked hammers.
Strike squarely and avoid glancing blows.
Do not strike other hammers or similar hard surfaces.
Use body hammers only for striking automotive type sheet metal; do not strike hard surfaces.
Flying chips can cause injury.

- Steel hammers can cause sparks during use.

Do not use near flammable substance.
Flammable substances can ignite causing injury.

- COMPOTHANE® or urethane hammers can rupture or ignite if exposed to liquid oxygen.

Do not use COMPOTHANE® or urethane hammers near liquid oxygen.
Ruptured and/or ignited COMPOTHANE® or urethane can cause injury.

Threading

WARNING

- Threading and rethreading tools can cause flying chips.

Wear safety goggles. (Users and bystanders)
Flying chips can cause injury.

Torque Testers

WARNING

- Calibration weights can cause tester and its base to tip.

Wear safety goggles. (Users and bystanders)
Counterbalance or anchor mounting base.
Tipping base can cause injury.

Torque Wrenches

WARNING

- Overtorquing can cause breakage. Wrench can break while breaking fasteners loose. Force against flex stops on flex head torque wrenches can cause head breakage. An out of calibration torque wrench can cause part or tool breakage.

Wear safety goggles. (Users and bystanders)
Do not exceed rated torque.
Do not use a torque wrench to break fasteners loose.
Do not force head of flex head torque wrenches against stops.
Periodic recalibration is necessary to maintain accuracy.
Broken tools can cause injury.

Wrenches

WARNING

- Excess force can cause crowfoot or flare nut wrench slippage.

Do not over-torque, no pipes or lever extensions.
Use only moderate force on crowfoot and flare nut wrenches.
Broken or slipping wrenches can cause injury.

- Slimline wrenches can break if overloaded.

Wear safety goggles. (Users and bystanders)
Broken wrench jaw can cause injury.

Index

PRODUCT CODE INDEX

Item	Page	Item	Page	Item	Page	Item	Page	Item	Page
039.003.150	294	10-21-51	423	11214	100	11607	101	11902	106
039.004.200	294	10-24-51	423	11216	100	11608	101	11903	106
040.001.100	296	10-24-23	423	11218	100	11609	101	11904	106
040.002.125	296	10-30-51	423	1122	116	11610	101	11905	106
040.003.150	296	10-30-23	423	11220	100	11611	101	11906	106
10002MRMH	76	10ST-I	79	11222	100	11612	101	1190B	94
10002MRPH	75	10ST-I-SET	79	11224	100	11613	101	1191	92
10005CF-II	64	10T-I	79	11226	100	11614	101	1191B	94
10005LDFE	74	10T-I-SET	79	11228	100	11615	101	1192	92
10005LDFESS	72	11002	102	11230	100	11616	101	11920	179
10005LDFN	74	11003	100	11232	100	11617	101	11920	219
10005LDFNSS	72	11004	102	11234	100	11618	101	1192B	94
10005MFRMH	76	11005	102	11236	100	11619	101	1193	92
1001-0-DTT	62	11006	102	1124	116	11620	101	1193B	94
1002CF3	65	11007	100	11240	100	11621	101	1194	92
1002CF3HA	65	11008	100	1128	116	11622	101	11940	106
1002MFRMH	76	11009	100	11310	105	11623	101	1194B	94
1002MFRPH	75	11010	103	11312	105	11624	101	1195	92
1002NMRMHSS	77	11011	101	11314	105	11625	101	11950	104
1002TAA-CDI	66	11012	103	11316	105	11626	101	11951	104
1003LDFN	74	11013	101	11318	105	11627	101	11952	104
1003LDFNSS	72	11014	103	1132	116	11629	101	11953	104
100NMIMH	79	11015	101	11320	105	11630	101	11954	104
100P-5MD	284	11016	103	11322	105	11632	101	11955	104
100P-6PD	285	11017	101	11324	105	11690	123	11956	104
100P-6SD	284	11030	105	1136	116	11691	123	11957	104
100P-8MD	283	11032	105	1140	116	11692	123	11958	104
100T-I	79	11108	102	11506	103	11708	105	11959	104
100T-I-SET	79	11110	102	11507	103	11710	105	1195B	94
10107	136	11112	102	11508	103	11711	105	11960	104
10111	136	11114	102	11509	103	11712	105	11961	104
10113	136	11116	102	11510	103	11713	105	11962	104
1020	111	11118	102	11511	103	11714	105	11963	104
10213	136	1112	116	11512	103	11715	105	11964	104
1027B	111	11120	102	11513	103	11716	105	11965	104
1033A	111	11122	102	11514	103	11717	105	11966	104
1033C	111	11124	102	11515	103	11718	105	11967	104
1037	111	11126	102	11516	103	11719	105	11968	104
1037B	111	11128	102	11517	103	1178A	92	11969	104
1038	111	1113	116	11518	103	1178AB	94	1197	92
1038A	111	11130	102	11519	103	1180	92	11970	104
1039B	111	11132	102	11520	103	1180B	94	1197B	94
10507	136	11134	102	11521	103	1182	92	1198	92
10509	136	11136	102	11522	103	1182B	94	1198A	92
10600	123	1114	116	11523	103	1184	92	1198ABL	94
10602	123	11140	102	11524	103	1184B	94	1198B	92
10604	123	1115	116	11525	103	1186	92	1198BBL	94
10606	123	1116	116	11526	103	1186B	94	1198BL	94
10650	123	1118	116	11527	103	1188	92	1198C	92
10652	123	1120	116	11529	103	1188B	94	1198CBL	94
10654	123	11208	100	11530	103	1190	92	1199	92
10656	123	11210	100	11532	103	11900	106	11990	104
10658	123	11212	100	11606	101	11901	106	1199A	92

Item	Page	Item	Page	Item	Page	Item	Page	Item	Page
1199ABL	94	1214MSC	96	1222MSC	96	1234MSC	96	1264TOB	131
1199B	92	1214RC	107	1222RC	107	1234RSC	98	1266TOB	131
1199BBL	94	1214RCF	109	1222RCF	109	1234SC	92	12691	106
1199BL	94	1214RCS	110	1222RCS	110	1234TOB	131	1270TOB	131
1199C	92	1214RSC	98	1222RSC	98	1234TOE	130	1272TOB	131
1199CBL	94	1214SC	92	1222SC	92	1234TSB	131	1276TOB	131
1206MRC	108	1214YSC	99	1222YSC	99	1234YSC	99	1282TOB	131
1206MSC	96	1215MRC	108	1223MSC	96	1236BSC	94	1284TOB	131
1207MSC	96	1215MRCF	109	1224BSC	94	1236MSC	96	1288TOB	131
1208MRC	108	1215MRCS	110	1224MRC	108	1236RSC	98	1294TOB	131
1208MRCF	109	1215MSC	96	1224MSC	96	1236SC	92	12-610	203
1208MRCS	110	1216BSC	94	1224RC	107	1236TOB	131	12-612	203
1208MSC	96	1216MRC	108	1224RCF	109	1236TOE	130	12-614	203
1208RC	107	1216MRCF	109	1224RCS	110	1236TSB	131	12-616	203
1208SC	92	1216MRCS	110	1224RSC	98	1236YSC	99	12-618	203
1209MRC	108	1216MSC	96	1224SC	92	1238SC	92	12-620	203
1209MRCF	109	1216RC	107	1224TSB	131	1240BSC	94	12-622	203
1209MRCS	110	1216RCF	109	1224YSC	99	1240RSC	98	12-624	203
1209MSC	96	1216RCS	110	1225MRC	108	1240SC	92	12-626	203
12100TOB	131	1216RSC	98	1225MSC	96	1240TOB	131	12-628	203
1210BSC	94	1216SC	92	1226BSC	94	1240TOE	130	12-630	203
1210MRC	108	1216YSC	99	1226MSC	96	1240TSB	131	12-632	203
1210MRCF	109	1217MRC	108	1226RC	107	1240YSC	99	12M-607	206
1210MRCS	110	1217MRCF	109	1226RSC	98	1242	92	12M-608	206
1210MSC	96	1217MRCS	110	1226SC	92	1242B	94	12M-609	206
1210RC	107	1217MSC	96	1226TSB	131	1242TOB	131	12M-610	206
1210RCF	109	1218BSC	94	1226YSC	99	1242TOE	130	12M-611	206
1210RCS	110	1218MRC	108	1227MSC	96	1242TSB	131	12M-612	206
1210SC	92	1218MRCF	109	1228BSC	94	1244	92	12M-613	206
1211MRC	108	1218MRCS	110	1228RC	107	1244B	94	12M-614	206
1211MRCF	109	1218MSC	96	1228RSC	98	1244TOB	131	12M-615	206
1211MRCS	110	1218RC	107	1228SC	92	1244TOE	130	12M-616	206
1211MSC	96	1218RCF	109	1228TOE	130	1246	92	12M-617	206
1211SC	92	1218RCS	110	1228TSB	131	1246B	94	12M-618	206
1212BSC	94	1218RSC	98	1228YSC	99	1246TOB	131	12M-619	206
1212MRC	108	1218SC	92	1229MSC	96	1246TOE	130	12M-620	206
1212MRCF	109	1218YSC	99	1230BSC	94	1246TSB	131	12M-621	206
1212MRCS	110	1219MRC	108	1230MSC	96	1248	92	12M-622	206
1212MSC	96	1219MRCF	109	1230RC	107	1248B	94	12M-623	206
1212RC	107	1219MRCS	110	1230RSC	98	1248TOB	131	12M-624	206
1212RCF	109	1219MSC	96	1230SC	92	1248TOE	130	13213	136
1212RCS	110	1220BSC	94	1230TOE	130	1248TSB	131	13342	127
1212RSC	98	1220MSC	96	1230TSB	131	1250TOB	131	13404	127
1212SC	92	1220RC	107	1230YSC	99	1252TOB	131	13406	127
1212YSC	99	1220RCF	109	1232BSC	94	1252TSB	131	13408	127
1213MRC	108	1220RCS	110	1232MSC	96	1254TOB	131	13410	127
1213MRCF	109	1220RSC	98	1232RC	107	1256TOB	131	13412	127
1213MRCS	110	1220SC	92	1232RSC	98	1258TOB	131	13415	127
1213MSC	96	1220YSC	99	1232SC	92	12601	106	13418	127
1214BSC	94	1221MRC	108	1232TOE	130	12603	106	13424	127
1214MRC	108	1221MSC	96	1232TSB	131	12605	106	13500	333
1214MRCF	109	1222BSC	94	1232YSC	99	12607	106	13502	333
1214MRCS	110	1222MRC	108	1234BSC	94	1260TOB	131	13504	333

Item	Page
13506	333
13508	333
13510	333
13512	333
13514	333
13516	333
13518	333
13520	333
13522	333
13524	333
13526	333
13528	333
13530	333
13532	333
13542	333
13544	333
13550	333
13551	333
13552	333
13553	333
13554	333
13555	333
13556	333
13557	333
13558	333
13560	333
13562	333
13563	333
13564	333
13565	333
13566	333
13567	333
13568	333
13569	333
13570	333
13571	333
13572	333
13573	333
13574	333
13575	333
13576	333
13577	333
13578	333
13604	127
13606	127
13608	127
13609	136
13610	127
13612	127
13615	127
13618	127
13624	127
13625	128
13642	127
13TH	130
14005NLDESS	73
14005NLDNSS	73
1403NLDNSS	73
140	334
141	334
142	334
143	334
144	334
147	334
14-612	242
14-614	242
14-616	242
14-618	242
14-620	242
14-622	242
14-624	242
14-626	242
14-628	242
14-630	242
14-632	242
14-634	242
14-636	242
14-638	242
14-640	242
14-642	242
14-644	242
14-646	242
14-648	242
14M-610	246
14M-611	246
14M-612	246
14M-613	246
14M-614	246
14M-615	246
14M-616	246
14M-617	246
14M-618	246
14M-619	246
14M-620	246
14M-621	246
14M-622	246
14M-623	246
14M-624	246
14M-625	246
14M-626	246
14M-627	246
14M-629	246
14M-630	246
14M-632	246
14M-634	246
14M-635	246
14M-636	246
15005NMRMHSS	77
1501MRMH	76
1501MRPH	75
1501TP-1	71
1501TP-1-SET	71
1501TPA-1	71
1501TPA-1-SET	71
1502LDIN	74
1502MRMH	76
1502TP-1	71
1502TP-1-SET	71
1503MFRMH	76
1503MFRPH	75
150MFIMHSS	79
151NSM	69
151SM	69
151SP	70
151SP-SET	70
1520 G	467
166-6-16-2.5-12	459
168-6-3.2-1P	458
168-6-3.5-1P	458
168-8-4.0-1P	458
168-8-4.0-3P	458
168-8-4.0-6	458
168-8-4.5-1P	458
168-8-4.5-6	458
168-8-4.8-1P	458
168-8-4.8-3P	458
168-8-4.8-6	458
168-8-5.2-1P	458
168-8-5.2-6	458
168-8-5.5-1P	458
168-8-5.5-3P	458
168-8-5.5-6	458
168-8-6.3-1P	458
16-624	263
16-626	263
16-628	263
16-630	263
16-632	263
16-634	263
16-636	263
16-638	263
16-640	263
16-642	263
16-644	263
16-646	263
16-648	263
16-648BW	260
16-650	263
16-652	263
16-654	263
16-656	263
16-658	263
16-660	263
16-664	263
1721	111
1723	111
1725	111
1725B	111
1727	111
1729	111
1729B	111
1731	111
1731A	111
1731B	111
1753LDFN	74
1753LDFNSS	72
1753-TC	85
17-6100	273
17-6104	273
17-6108	273
17-6112	273
17-6116	273
17-6118	273
17-6120	273
17-6122	273
17-6124	273
17-6126	273
17-6128	273
17-6130	273
17-6132	273
17-6134	273
17-6136	273
17-6138	273
17-6140	273
17-6142	273
17-6144	273
17-6146	273
17-6148	273
17-6152	273
17-6156	273
17-6160	273
17-6172	273
17-6184	273
17-632	273
17-634	273
17-636	273
17-638	273
17-640	273
17-642	273
17-644	273
17-646	273
17-648	273
17-648BW	272
17-650	273
17-652	273
17-654	273
17-656	273
17-658	273
17-660	273
17-662	273
17-664	273
17-666	273
17-668	273
17-670	273
17-672	273
17-674	273
17-676	273
17-678	273
17-680	273
17-682	273
17-684	273
17-686	273
17-688	273
17-690	273
17-692	273
17-694	273
17-696	273
182NLDNSS	73
1904A	128
1905	128
1906	128
1906B	128
1907	128
1907A	128
1908	128
1908A	128
1909	128
1909A	128
1910	128
1911	128
1911A	128
1912	128
1999MV-10	494
1999MV-12	494
1999MV-3	494
1999MV-4	494
1999MV-5	494
1999MV-6	494
1999MV-7	494
1999MV-8	494
1999MV-9	494
1-104-10-2-0	443
1-104-10-3-0	443
1-104-12-2-0	443
1-104-12-3-0	443

Item	Page	Item	Page	Item	Page	Item	Page	Item	Page
1-104-14-3-0	443	1-145-12-0-0	445	1-210-12-1-0	447	1HP05T05	396	2000-321-0	61
1-106-08-1-0	443	1-145-14-0-0	445	1-210-12-1-2	447	1HP10T01L	396	2000-322-0	61
1-106-08-1-2	443	1-160-04-1-0	446	1-210-12-2-0	447	1HP10T02	396	2000-400-02	55
1-106-10-1-0	443	1-160-04-2-0	446	1-210-12-3-0	447	1HP10T06	396	2000-500-02	55
1-106-10-1-2	443	1-160-04-3-0	446	1-210-14-1-0	447	1HP10T06T	396	2000-50-1	56
1-106-12-1-0	443	1-160-06-1-0	446	1-230-04-1-0	447	1HP10T10	396	2000-50-2	58
1-110-04-1-0	444	1-160-06-1-2	446	1-230-04-2-0	447	1HP10T10T	396	2000-550-02	56
1-110-04-2-0	444	1-160-06-2-0	446	1-230-04-3-0	447	1HP15T04	396	20005LDFE	74
1-110-04-3-0	444	1-160-06-2-2	446	1-230-06-1-0	447	1HP15T06	396	20005LDFESS	72
1-110-06-1-0	444	1-160-06-3-0	446	1-230-06-1-2	447	1HP20T02L	396	20005MFMHSS	76
1-110-06-2-0	444	1-160-08-1-0	446	1-230-06-2-0	447	1HP25T02	396	2000-600-02	55
1-110-06-3-0	444	1-160-08-1-2	446	1-230-06-2-2	447	1HP25T04	396	2000-610-02	55
1-110-08-1-0	444	1-160-08-2-0	446	1-230-06-3-0	447	1HP25T06	396	2000-65-02	55
1-110-08-1-2	444	1-160-08-2-2	446	1-230-08-1-0	447	1HP25T08	396	2000-750-02	58
1-110-08-2-0	444	1-160-08-3-0	446	1-230-08-1-2	447	1HP30T02L	396	2000-750-06	61
1-110-08-2-2	444	1-160-10-1-0	446	1-230-08-2-0	447	1HP55T06	396	2000-800-02	57
1-110-08-3-0	444	1-160-10-1-2	446	1-230-08-2-2	447	20002	329	2000-810-01	57
1-110-10-1-0	444	1-160-10-2-0	446	1-230-08-3-0	447	20003	329	2000-SW	56
1-110-10-1-2	444	1-160-10-3-0	446	1-230-10-1-0	447	20004	329	20010	329
1-110-10-2-0	444	1-160-12-1-0	446	1-230-10-1-2	447	20006	329	20012	329
1-110-10-2-2	444	1-160-12-2-0	446	1-230-10-2-0	447	20008	329	2002MRMH	76
1-110-10-3-0	444	1-170-04-3-0	446	1-230-10-2-2	447	2000-4-02	55	2003NMRMHSS	77
1-110-12-1-0	444	1-170-06-1-0	446	1-230-10-3-0	447	2000-5-02	55	20042	329
1-110-12-2-0	444	1-170-06-2-0	446	1-230-12-1-0	447	2000-6-02	55	200NMIMH	79
1-110-12-3-0	444	1-170-06-2-2	446	1-230-12-2-0	447	2000-7-02	55	200T-I	79
1-110-14-1-0	444	1-170-06-3-0	446	1-230-12-3-0	447	2000-8-02	55	200T-I-SET	79
1-111-04-1-0	444	1-170-08-1-0	446	1-250-08-2-0	448	2000-10-02	55	202,020	279
1-111-04-2-0	444	1-170-08-1-2	446	1-320-10-2-0	448	2000-11-02	55	202,021	279
1-111-04-3-0	444	1-170-08-2-0	446	1-320-12-2-0	448	2000-12-02	55	20401	343
1-111-06-1-0	444	1-170-08-2-2	446	1-473-06-2-2	448	2000-1	55	20402	343
1-111-06-2-0	444	1-170-08-3-0	446	1-476-04-3-2	449	2000-100-02	55	204A	128
1-111-06-3-0	444	1-170-10-1-0	446	1-478-08-1-2	449	2000-13-02	55	20541	341
1-111-08-1-0	444	1-170-10-1-2	446	1.81NLDNSS	73	2000-14-02	55	20542	341
1-111-08-2-0	444	1-170-10-2-0	446	1AP100T06	396	2000-150-03	61	20543	341
1-111-08-3-0	444	1-170-10-3-0	446	1AP10T01L	396	2000-151-0	58	20544	341
1-143-04-1-0	445	1-210-04-1-0	447	1AP10T02	396	2000-152-0	58	20545	341
1-143-04-2-0	445	1-210-04-2-0	447	1AP10T06	396	2000-152-3	61	20546	341
1-143-04-3-0	445	1-210-04-3-0	447	1AP10T06L	396	2000-154-0	58	205	128
1-143-06-1-0	445	1-210-06-1-0	447	1AP10T06T	396	2000-154-8	61	20651	342
1-143-06-1-2	445	1-210-06-1-2	447	1AP10T06TL	396	2000-2	56	20678	342
1-143-06-2-0	445	1-210-06-2-0	447	1AP10T10	396	2000-226-2	61	206	128
1-143-06-3-0	445	1-210-06-2-2	447	1AP10T10L	396	2000-226-3	61	206B	128
1-143-08-1-0	445	1-210-06-3-0	447	1AP10T10T	396	2000-250-02	58	207	128
1-143-08-1-2	445	1-210-08-1-0	447	1AP10T10TL	396	2000-260-0	55	207A	128
1-143-08-2-0	445	1-210-08-1-2	447	1AP15T04	396	2000-261-0	55	208	427
1-143-08-3-0	445	1-210-08-2-0	447	1AP15T06	396	2000-262-0	55	208A	128
1-143-10-1-0	445	1-210-08-2-2	447	1AP20T02L	396	2000-263-02	55	209	128
1-143-10-1-2	445	1-210-08-3-0	447	1AP25T02	396	2000-3	56	209A	128
1-143-10-2-0	445	1-210-10-1-0	447	1AP25T04	396	2000-301	58	2101G-125	311
1-143-10-3-0	445	1-210-10-1-2	447	1AP25T06	396	2000-302-0	58	2101G-140	311
1-143-12-1-0	445	1-210-10-2-0	447	1AP25T08	396	2000-303-0	58	2101G-160	311
1-143-12-2-0	445	1-210-10-2-2	447	1AP30T02L	396	2000-304-0	58	2101G-180	311
1-143-12-3-0	445	1-210-10-3-0	447	1AP55T06	396	2000-320-0	58	2101S-140	489

PRODUCT CODE INDEX

Item	Page	Item	Page	Item	Page	Item	Page	Item	Page
2101S-160	489	23203	321	24008	285	24401	299	2520 S	490
2101S-180	489	23210	321	24010	287	24403	299	2521V-160	486
2101S-200	489	23211	321	24012	287	24405	299	2533-7	314
211	128	23220	321	2401CI3	65	24407	299	2533-8	314
211A	128	23221	321	2401CI3HA	65	24409	299	2533V-7	484
215-150	428	23222	322	2403NLDNSS	73	24411	299	2533V-8	484
21661	356	23223	322	24050	299	24413	299	2535L	475
216-150-R	421	23224	322	24051	299	24415	299	2600-16-XT11-HP	413
216-300-R	428	23225	322	24061	300	24416	299	2600-22-XT-HP	413
2171V-160	488	23301	322	24101	298	24417	299	2620-80	320
2171V-180	488	23302	322	24102	298	24418	299	2628 S-180	489
218	427	23303	322	24103	298	24419	299	2628 S-200	489
2191V-200	488	23304	322	24104	298	24420	299	2628G-160	307
21SP	70	23305	322	24105	298	24421	299	2628G-180	307
21SP-SET	70	23309	322	24201	293	24422	299	2653-9	309
2203-8	311	23310	322	24203	293	24423	299	2653V-9	484
2203V-5	485	23320	322	24205	293	2444	464	2678V-180	486
2203V-8	485	23321	322	24207	293	24451	300	268	427
2213-8	311	23402	310	24209	293	24452	300	2700-22-XT7-HP	413
2213V-8	485	23403	310	2420G-125	315	24453	300	2700-24-XT7-HP	413
221D	306	23404	313	24211	293	24454	300	2744	467
2223V-150	486	23405	313	24213	293	24455	300	2800-1	57
222D	306	23406	313	24215	293	24456	300	2806-35V	490
223D	306	23407	313	24217	293	24457	300	2806-52V	490
224D	306	23409	317	24219	293	24458	300	28201	466
225-PLUS	426	23411	317	2421V-160	487	24459	300	28203	466
225-S	426	2344-0050-03	63	24229	293	24460	300	28205	466
225D	306	23503	319	24237	293	24461	300	2820HSV1	498
228-15-5P	462	23506	318	24239	293	24462	300	2820HSV2	498
228-32-5P	462	23512	319	24241	293	2448	464	2820V13	491
228-HSS-1	442	23515	319	24243	293	24TH	130	2820V17	491
228-HSS-3	442	23518	318	24247	295	2500-16-XT-HP	415	2820VBC	490
228-HSS-4	442	23521	318	24249	295	2500-19-XT-HP	415	2820VG05	500
228-HSS-6	442	23524	319	24251	295	2500-22-XT-HP	415	2820VG10	500
228	427	23527	319	24253	295	25003MRMH	76	2820VGCOT	500
23052	305	23530	319	24255	295	2500-50-0	58	2820VHELP	499
23054	305	23533	318	24257	295	2502CI-II	64	2820VM	500
23070	321	23535	318	24259	295	2502ED-CDI	68	2820VP	499
23071	321	23541	318	24263	297	2502-I-DTT	62	2820VPC	499
23072	322	23542	318	24265	297	2502LDIN	74	2820VTEE	499
23074	322	23543	318	24267	297	2502MRMH	76	28211	466
23076	322	23603	310	24269	297	2502MRPH	75	28221	466
23080	318	23801	324	24271	297	2503CF3	65	28231	466
23092	324	23802	324	24273	297	2503CF3HA	65	28233	466
23101	308	23803	324	2427 S-200	489	2503CF-II	64	28251	466
23102	308	23804	324	2427G-160	314	2503-F-DTT	62	28253	466
23103	308	23-21	424	2427G-200	314	2503LDFN	74	28255	466
23104	307	23-24	424	2427V-200	487	2503LDFNSS	72	28301	465
23105	307	23-30	424	2430 S-200	489	2503MFRMH	76	28305	465
23106	307	23-36	424	2430G-140	314	2503MFRPH	75	28307	465
23107	307	24002	287	2430G-160	314	2503TAA-CDI	66	28309	465
23201	321	24004	286	2430V-160	487	250MFIMHSS	79	28351	465
23202	321	24006	286	2430V-200	487	2520	320	28449	346

Item	Page	Item	Page	Item	Page	Item	Page	Item	Page
28MV-10	494	2-304-14-2-0	451	2MV-19	491	30207	149	30612	153
28MV-11	494	2-304-14-4-0	451	2MV-21	491	30208	149	30613	153
28MV-12	494	2-304-16-0-0	451	2MV-22	491	30209	149	30614	153
28MV-13	494	2-304-16-1-0	451	2MV-23	491	30210	149	30699	153
28MV-14	494	2-304-16-2-0	451	2MV-24	491	30211	149	306	426
28MV-15	494	2-304-16-4-0	451	2MV-6	491	30212	149	30704	155
28MV-16	494	2-304-18-0-0	451	2MV-7	491	30214	149	30705	155
28MV-17	494	2-304-18-2-0	451	2MV-8	491	30216	149	30706	155
28MV-18	494	2-33B	201	2MV-9	491	30218	149	30707	155
28MV-19	494	2-470-14-2-0	451	2ZV-1	491	302NLDNSS	73	30708	155
28MV-20	494	2-470-14-4-0	451	2ZV-1.1/16	491	30306	152	30709	155
28MV-21	494	2-470-16-1-0	451	2ZV-1/2	491	30307	152	30710	155
28MV-22	494	2-471-16-1-0	451	2ZV-11/16	491	30308	152	30711	155
28MV-8	494	2-472-14-2-0	452	2ZV-13/16	491	30309	152	30712	155
28MV-9	494	2-472-16-0-0	452	2ZV-15/16	491	30310	152	30713	155
296	421	2-472-16-1-0	452	2ZV-3/4	491	30311	152	30714	155
2971G-250	308	2-472-16-2-0	452	2ZV-3/8	491	30312	152	30755	155
2979D-180	308	2-4A	201	2ZV-5/16	491	30314	152	30804	154
2-02B	201	2-608	202	2ZV-5/8	491	30316	152	30805	154
2-103A	201	2-610	202	2ZV-7/16	491	30318	152	30806	154
2-106A	201	2-612	202	2ZV-7/8	491	303-5P	421	30807	154
2-140B	201	2-614	202	2ZV-9/16	491	30406	151	30808	154
2-300-14-0-0	449	2-616	202	30001	147	30407	151	30809	154
2-300-14-2-0	449	2-618	202	30002	148	30408	151	30810	154
2-300-14-4-0	449	2-620	202	30003	148	30409	151	30811	154
2-300-16-0-0	449	2-622	202	30004	148	30410	151	30812	154
2-300-16-1-0	449	2-624	202	30005	147	30411	151	30813	154
2-300-16-2-0	449	2-626	202	30006	147	30412	151	30814	154
2-300-16-4-0	449	2-628	202	30007	148	30414	151	30855	154
2-300-18-0-0	449	2-630	202	30008	147	30416	151	30902	156
2-300-18-2-0	449	2-632	202	30009	148	30418	151	30904	156
2-301-14-0-0	450	2M-607	204	30011	147	3045V-1	480	30906	158
2-301-14-2-0	450	2M-608	204	30012	147	3045V-2	481	30908	158
2-301-16-0-0	450	2M-609	204	30013	148	30504	153	3090-20-XT11-HP	413
2-301-16-1-0	450	2M-610	204	3002LDIN	74	30505	153	30920	148
2-301-16-2-0	450	2M-611	204	3002LDINSS	72	30506	153	30922	150
2-302-14-0-0	450	2M-612	204	300-14-F15/16-HP	419	30507	153	30923	149
2-302-14-2-0	450	2M-613	204	300T-I	79	30508	153	30924	152
2-302-14-4-0	450	2M-614	204	300T-I-SET	79	30509	153	30925	153
2-302-16-0-0	450	2M-615	204	30106	150	30510	153	30926	153
2-302-16-1-0	450	2M-616	204	30107	150	30511	153	30937	151
2-302-16-2-0	450	2M-617	204	30108	150	30512	153	30939	155
2-302-16-4-0	450	2M-618	204	30109	150	30513	153	30941	154
2-302-18-0-0	450	2M-619	204	30110	150	30514	153	30943	157
2-302-18-2-0	450	2MV-10	491	30111	150	30599	153	30945	157
2-303-14-2-0	450	2MV-11	491	30112	150	30604	153	31001	179
2-303-16-0-0	450	2MV-12	491	30114	150	30605	153	31002	179
2-303-16-1-0	450	2MV-13	491	30116	150	30606	153	31003	179
2-303-16-2-0	450	2MV-14	491	30118	150	30607	153	31004	179
2-303-16-4-0	450	2MV-15	491	301LDIN	74	30608	153	31005	179
2-303-18-0-0	450	2MV-16	491	301LDINSS	72	30609	153	31006	179
2-303-18-2-0	450	2MV-17	491	301	421	30610	153	31007	179
2-304-14-0-0	451	2MV-18	491	30206	149	30611	153	31008	179

PRODUCT CODE INDEX

Item	Page	Item	Page	Item	Page	Item	Page	Item	Page
31009	179	31410	186	31707	194	31945	194	32312	228
31011	179	31412	186	31708	194	31947	199	32314	228
31013	179	31414	186	31709	194	31949	198	32316	228
31016	179	31416	186	31710	194	31951	198	32318	228
31108	182	31418	186	31711	194	319	425	32320	228
31110	182	31420	186	31712	194	31 R US	125	32322	228
31112	182	31422	186	31713	194	320	426	32324	228
31114	182	31424	186	31714	194	32001	219	32326	228
31116	182	31426	186	31715	194	32002	219	32328	228
31118	182	31428	186	31716	194	32003	219	32330	228
31120	182	31430	186	31717	194	32004	219	32332	228
31122	182	31432	186	31718	194	32005	219	32334	228
31124	182	31506	191	31719	194	32006	219	32336	228
31126	182	31507	191	317	425	32007	219	32338	228
31128	182	31508	191	31806	193	32008	219	32340	228
31130	182	31509	191	31807	193	32009	219	32348	228
31132	182	3150-12-XT9-HP	414	31808	193	32011	219	3240-14-XT11-HP	414
31142	184	31510	191	31809	193	321	422	32412	226
31144	184	31511	191	3180-14-XT11-HP	413	32112	223	32414	226
31146	184	31512	191	31810	193	32114	223	32416	226
31148	184	31513	191	31811	193	32116	223	32418	226
31150	184	31514	191	31812	193	32118	223	32420	226
31152	184	31515	191	31813	193	32120	223	32422	226
31154	184	31516	191	31814	193	32122	223	32424	226
31208	182	31517	191	31815	193	32124	223	32426	226
31210	182	31518	191	31816	193	32126	223	32428	226
31212	182	31519	191	31817	193	32128	223	32430	226
31214	182	31528	184	31818	193	32130	223	32432	226
31216	182	31530	184	31819	193	32132	223	32434	226
31218	182	31531	184	31902	196	32134	223	32436	226
31220	182	31532	184	31904	197	32136	223	32438	226
31222	182	31533	184	31906	197	32138	223	32440	226
31224	182	31534	184	31908	200	32140	223	32448	226
31226	182	31535	184	31910	199	32148	223	325	425
31228	182	31536	184	31912	199	321-18-SB	422	32509	231
31230	182	31537	184	31920	179	321-24-SB	422	32510	231
31232	182	31538	184	31922	182	321-7-SB	422	32511	231
31301	187	31539	184	31923	182	32212	221	32512	231
31303	187	31606	190	31924	182	32214	221	32513	231
31308	187	31607	190	31925	182	32216	221	32514	231
31310	187	31608	190	31926	186	32218	221	32515	231
31312	187	31609	190	31928	186	32220	221	32516	231
31314	187	31610	190	31930	191	32222	221	32517	231
31316	187	31611	190	31932	191	32224	221	32518	231
31318	187	31612	190	31934	193	32226	221	32519	231
31320	187	31613	190	31936	193	32228	221	32520	231
31322	187	31614	190	31938	184	32230	221	32521	231
31324	187	31615	190	31939	184	32232	221	32522	231
31326	187	31616	190	31940	187	32234	221	32523	231
31328	187	31617	190	31941	187	32236	221	32524	231
31330	187	31618	190	31942	190	32238	221	32525	231
31332	187	31619	190	31943	190	32240	221	32526	231
31408	186	31706	194	31944	194	32248	221	32527	231

Item	Page	Item	Page	Item	Page	Item	Page	Item	Page
32528	231	32809	233	33006	255	3504LDFN	74	35135	199
32529	231	32810	233	33007	255	3504LDFNSS	72	35136	199
32530	231	32811	233	33008	255	35050	158	35137	199
32532	231	32812	233	33009	255	35051	158	35140	200
32536	231	32813	233	33011	255	35052	158	35141	200
32609	230	32814	233	33012	255	35063	157	35142	200
32610	230	32815	233	33013	255	35064	157	35143	200
32611	230	32816	233	33014	255	35065	157	35150	200
32612	230	32817	233	331-21-51-KP	423	35066	157	35151	200
32613	230	32818	233	33228	257	35067	157	35152	200
32614	230	32819	233	33230	257	35068	157	35163	198
32615	230	32820	233	33232	257	35070	156	35164	198
32616	230	32821	233	33234	257	35071	156	35165	198
32617	230	32822	233	33236	257	35072	156	35166	198
32618	230	32823	233	33238	257	35073	156	35167	198
32619	230	32824	233	33240	257	35074	156	35168	198
32620	230	32825	233	33242	257	35075	156	35169	198
32621	230	32826	233	33244	257	35080	158	35170	197
32622	230	32827	233	33246	257	35081	158	35171	197
32623	230	32828	233	33248	257	35082	158	35172	197
32624	230	32829	233	33252	257	35083	158	35173	197
32625	230	32830	233	33256	257	35084	158	35174	197
32626	230	32832	233	33258	257	35085	158	35175	197
32627	230	32836	233	33260	257	350NMIMH	79	35176	197
32628	230	32902	236	33264	257	35100	196	35182	199
32629	230	32903	236	332-21-51	423	35101	196	35183	199
32630	230	32904	236	333	423	35102	196	35184	199
32632	230	32906	238	333-5	423	35103	196	35185	199
32636	230	32908	238	33901	251	35104	196	35186	199
32709	234	32920	219	33903	252	35105	196	35187	199
32710	234	32922	221	33905	252	35106	196	35188	199
32711	234	32924	221	33920	257	35107	196	35192	199
32712	234	32926	226	33922	257	35110	198	35193	199
32713	234	32928	226	3403NMRMHSS	77	35111	198	35194	199
32714	234	32930	230	342-35	61	35112	198	35195	199
32715	234	32932	230	342-36	61	35113	198	35196	199
32716	234	32934	223	343-25	61	35114	198	35197	199
32717	234	32936	228	35000	156	35115	198	35198	199
32718	234	32937	223	35001	156	35116	198	3519M	115
32719	234	32939	228	35002	156	35117	198	35202	236
32720	234	32941	231	35003	156	35120	197	35203	236
32721	234	32943	231	35004	156	35121	197	35204	236
32722	234	32945	234	35005	156	35122	197	35206	236
32723	234	32947	234	35020	157	35123	197	35208	236
32724	234	32949	233	35021	157	35124	197	35210	236
32725	234	32951	233	35022	157	35125	197	35212	236
32726	234	32953	237	35023	157	35126	197	35214	236
32727	234	32957	237	35024	157	35127	197	3521M	115
32728	234	33001	255	35025	157	35130	199	3522M	115
32729	234	33002	255	3503NLDNSS	73	35131	199	35232	237
32730	234	33003	255	35040	158	35132	199	35233	237
32732	234	33004	255	35041	158	35133	199	35234	237
32736	234	33005	255	35042	158	35134	199	35236	237

PRODUCT CODE INDEX

Item	Page	Item	Page	Item	Page	Item	Page	Item	Page
35238	237	3552	114	36108	203	36811	205	3724	112
3524	114	3552M	115	36110	203	36812	205	3726	112
35240	237	3554	114	36112	203	36813	205	3728	112
35242	237	3555M	115	36114	203	36814	205	37312	243
35244	237	3556	114	36116	203	36815	205	37314	243
3524M	115	3558	114	36118	203	36816	205	37316	243
35251	238	3560	114	36120	203	36817	205	37318	243
35252	238	35604	207	36122	203	36818	205	3732	112
35253	238	35605	207	36124	203	36819	205	37320	243
3526	114	35606	207	36212	202	36902	203	37322	243
35274	236	35608	207	36214	202	36904	204	37324	243
35275	236	3560M	115	36216	202	36906	205	37326	243
35276	236	35610	207	36218	202	36908	207	37328	243
35277	236	3562	114	36220	202	36910	205	37330	243
35278	236	35620	207	36222	202	36912	202	37332	243
35279	236	35622	207	36224	202	36914	207	37334	243
3527M	115	35624	207	36308	204	36918	207	37336	243
3528	114	35626	207	36310	204	369	421	37338	243
35283	238	35628	207	36312	204	369-BLADE	421	3734	112
35284	238	35630	207	36314	204	36TH	130	37340	243
35285	238	35632	207	36316	204	37001	239	3736	112
35286	238	3564	114	36318	204	37002	239	3736MH-250	350
35287	238	3565M	115	36320	204	37003	239	3736MH-300	350
35294	237	3568	114	36322	204	37004	239	3736MH-400	350
35295	237	35706	248	36324	204	37005	239	3739H-250	350
35296	237	35708	248	363-32	332	37112	241	3739H-300	350
35297	237	35710	248	36507	205	37114	241	3739H-400	350
35298	237	35712	248	36508	205	37116	241	3740	112
35299	237	35714	248	36509	205	37118	241	3744	112
352NLDNSS	73	35717	248	36510	205	3712	112	3746	112
3530	114	3572	114	36511	205	37120	241	3748	112
3530M	115	35730	248	36512	205	37122	241	3750H	350
3532	114	35732	248	36513	205	37124	241	37510	245
3532M	115	35734	248	36514	205	37126	241	37511	245
3534	114	35736	248	36515	205	37128	241	37512	245
3536	114	35738	248	36516	205	37130	241	37513	245
3536M	115	35740	248	36517	205	37132	241	37514	245
3537M	115	35742	248	36518	205	37134	241	37515	245
3538	114	3576	114	36519	205	37136	241	37516	245
3538M	115	35810	265	36707	207	37138	241	37517	245
3540	114	35812	265	36708	207	3714	112	37518	245
3540M	115	35814	265	36709	207	37140	241	37519	245
3541M	115	35817	265	36710	207	3716	112	3752	112
3542	114	35819	265	36711	207	3718	112	37521	245
3542M	115	35821	265	36712	207	3720	112	37522	245
3544	114	35824	265	36713	207	37216	241	37524	245
3544M	115	35827	265	36714	207	37218	241	37527	245
3546	114	35830	265	36715	207	3722	112	3754	112
3546M	115	35832	265	36716	207	37220	241	3756	112
3548	114	36001	201	36717	207	37222	241	3758	112
3548M	115	36002	201	36718	207	37224	241	3760	112
3550	114	36003	201	36719	207	37226	241	3764	112
3550M	115	36004	201	36810	205	37228	241	37710	247

Item	Page	Item	Page	Item	Page	Item	Page	Item	Page
37711	247	38136	262	3830-38-VIP	435	3832-35	434	3840-100-24-ST-10P	438
37712	247	38138	262	3830-40-VIP	435	3832-37	434	3840-100-24-ST-5P	438
37713	247	38140	262	3830-41-VIP	435	3832-38	434	3840-100-6-ST-10P	438
37714	247	38142	262	3830-43-VIP	435	3832-40	434	3840-100-6-ST-5P	438
37715	247	38144	262	3830-44-VIP	435	3832-41	434	3840-150-10-HST-10P	441
37716	247	38146	262	3830-46-VIP	435	3832-43	434	3840-150-10-HST-5P	441
37717	247	38148	262	3830-48-VIP	435	3832-44	434	3840-150-10-ST-100P	438
37718	247	38150	262	3830-51-VIP	435	3832-46	434	3840-150-10-ST-10P	438
37719	247	38152	262	3830-52-VIP	435	3832-48	434	3840-150-10-ST-5P	438
37721	247	38154	262	3830-54-VIP	435	3832-51	434	3840-150-14-HST-10P	441
37722	247	38156	262	3830-56-VIP	435	3832-52	434	3840-150-14-HST-5P	441
37724	247	38158	262	3830-57-VIP	435	3832-54	434	3840-150-14-ST-100P	438
37727	247	38160	262	3830-59-VIP	435	3832-56	434	3840-150-14-ST-10P	438
3780	112	38162	262	3830-60-VIP	435	3832-57	434	3840-150-14-ST-5P	438
37813	245	38164	262	3830-64-VIP	435	3832-59	434	3840-150-18-HST-10P	441
37814	245	3816-300	428	3830-65-VIP	435	3832-60	434	3840-150-18-HST-5P	441
37815	245	3818-300-PROG-100	428	3830-67-VIP	435	3832-64	434	3840-150-18-ST-100P	438
37816	245	38216	264	3830-68-VIP	435	3832-65	434	3840-150-18-ST-10P	438
37817	245	38218	264	3830-70-VIP	435	3832-67	434	3840-150-18-ST-5P	438
37818	245	38220	264	3830-73-VIP	435	3832-68	434	3840-150-24-ST-100P	438
37819	245	38224	264	3830-76-VIP	435	3832-70	434	3840-150-24-ST-10P	438
3782	112	38226	264	3830-79-VIP	435	3832-73	434	3840-150-24-ST-5P	438
37820	245	38228	264	3830-83-VIP	435	3832-76	434	3840-150-4/6-SC-10P	439
37821	245	38232	264	3830-86-VIP	435	3832-79	434	3840-150-4/6-SC-5P	439
37822	245	38236	264	3830-89-VIP	435	3832-83	434	3840-150-5/8-DSL-10P	439
37823	245	38240	264	3830-92-VIP	435	3832-86	434	3840-150-5/8-DSL-5P	439
37902	241	3830-102-VIP	435	3830-95-VIP	435	3832-89	434	3840-150-5/8-SL-100P	439
37904	241	3830-105-VIP	435	3830-98-VIP	435	3832-92	434	3840-150-5/8-SL-10P	439
37906	243	3830-108-VIP	435	3832-102	434	3832-95	434	3840-150-5/8-SL-5P	439
37908	243	3830-111-VIP	435	3832-105	434	3832-98	434	3840-150-6-ST-10P	438
37910	245	3830-114-VIP	435	3832-108	434	3834-ADP	436	3840-150-6-ST-5P	438
37912	245	3830-121-VIP	435	3832-111	434	3834-ARBR-11152	436	3840-150-8/12-ST-100P	438
37913	247	3830-127-VIP	435	3832-114	434	3834-ARBR-11152QC	436	3840-150-8/12-ST-10P	438
37914	247	3830-133-VIP	435	3832-121	434	3834-ARBR-1130	436	3840-150-8/12-ST-5P	438
37916	245	3830-140-VIP	435	3832-127	434	3834-ARBR-16152QC	436	3840-228-10/14-PR09-100P	441
37918	241	3830-146-VIP	435	3832-133	434	3834-ARBR-630	436	3840-228-10/14-PR09-10P	441
37920	248	3830-14-VIP	435	3832-14	434	3834-ARBR-730	436	3840-228-10/14-PR13-100P	441
37922	248	3830-152-VIP	435	3832-140	434	3834-ARBR-9100	436	3840-228-10/14-PR13-10P	441
38001	259	3830-16-VIP	435	3832-146	434	3834-ARBR-9100QC	436	3840-228-10-DSL-10P	439
38002	259	3830-17-VIP	435	3832-152	434	3834-ARBR-930	436	3840-228-10-DSL-5P	439
38003	259	3830-19-VIP	435	3832-16	434	3834-ARBR-SD152QC	436	3840-228-10-HST-10P	441
38004	259	3830-20-VIP	435	3832-17	434	3834-ARBR-SD30	436	3840-228-10-HST-5P	441
38005	259	3830-21-VIP	435	3832-19	434	3834-DP-75	436	3840-228-10-ST-100P	438
38006	259	3830-22-VIP	435	3832-20	434	3834-DRL	436	3840-228-10-ST-10P	438
38118	262	3830-24-VIP	435	3832-21	434	3834-DRL-CT	436	3840-228-10-ST-5P	438
38120	262	3830-25-VIP	435	3832-22	434	3834-ES	436	3840-228-14-HST-10P	441
38122	262	3830-27-VIP	435	3832-24	434	3834-EXT-1	436	3840-228-14-HST-5P	441
38124	262	3830-29-VIP	435	3832-25	434	3840-100-14-SC-5P	439	3840-228-14-ST-100P	438
38126	262	3830-30-VIP	435	3832-27	434	3840-100-14-ST-10P	438	3840-228-14-ST-10P	438
38128	262	3830-32-VIP	435	3832-29	434	3840-100-14-ST-5P	438	3840-228-14-ST-5P	438
38130	262	3830-33-VIP	435	3832-30	434	3840-100-18-SC-5P	439	3840-228-18-HST-10P	441
38132	262	3830-35-VIP	435	3832-32	434	3840-100-18-ST-10P	438	3840-228-18-HST-5P	441
38134	262	3830-37-VIP	435	3832-33	434	3840-100-18-ST-5P	438	3840-228-18-ST-100P	438

Item	Page
3840-228-18-ST-10P	438
3840-228-18-ST-5P	438
3840-228-5/8-DSL-10P	439
3840-228-5/8-DSL-5P	439
3840-228-6-SL-10P	439
3840-228-6-SL-5P	439
3840-228-8/12-ST-100P	438
3840-228-8/12-ST-10P	438
3840-228-8/12-ST-5P	438
3840-300-10-HST-10P	441
3840-300-10-HST-5P	441
3840-300-14-HST-10P	441
3840-300-14-HST-5P	441
3840-300-14-ST-100P	438
3840-300-14-ST-10P	438
3840-300-14-ST-5P	438
3840-300-18-HST-10P	441
3840-300-18-HST-5P	441
3840-300-18-ST-100P	438
3840-300-18-ST-10P	438
3840-300-18-ST-5P	438
3840-300-5/8-DSL-10P	439
3840-300-5/8-DSL-5P	439
3840-300-6-SL-10P	439
3840-300-6-SL-5P	439
3840-300-8/12-SL-10P	439
3840-300-8/12-SL-5P	439
3842-150-7-SL-10P	440
3842-150-7-SL-5P	440
3842-228-7-SL-10P	440
3842-228-7-SL-5P	440
3842-300-7-SL-10P	440
3842-300-7-SL-5P	440
3845-18-100P-BULK	441
3845-18-10P	441
3845-24-100P-BULK	441
3845-24-10P	441
3845-32-100P-BULK	441
3845-32-10P	441
3846-100-G-ST-2P	440
3846-150-6-SL-1P	440
3846-150-G-ST-2P	440
3846-228-3-ST-1P	440
3846-300-3-ST-1P	440
38	356
38901	262
38903	264
38920	262
38932	264
39002	270
39003	270
39004	270
39005	270
39006	270
3906-250-18-100	428
3906-250-24-100	428
3906-250-32-100	428
3906-300-14-100	428
3906-300-18-100	428
3906-300-18-10P	428
3906-300-18-2P	428
3906-300-24-100	428
3906-300-24-10P	428
3906-300-24-5P	428
3906-300-32-100	428
3906-300-32-10P	428
3906-300-32-2P	428
3906-300-32-5P	428
3906-300-3P	428
390-2-2	58
39624	272
39626	272
39628	272
39630	272
39632	272
39634	272
39636	272
39638	272
39640	272
39642	272
39644	272
39646	272
39648	272
39650	272
39652	272
39654	272
39656	272
39658	272
39660	272
39662	272
39664	272
39666	272
39668	272
39670	272
39672	272
39674	272
39676	272
39678	272
39680	272
39682	272
39684	272
39686	272
39688	272
39690	272
39692	272
39694	272
39696	272
396-LAP	420
3.51NLDNSS	73
3S12T	401
3S12TV	402
3S20T	401
3S20TV	402
3T12T	401
3T12TV	402
3T20T	401
3T20TV	402
40000	463
4002-I-DTT	62
4004MFRMH	76
40052	465
40058	465
40072	465
40076	465
40078	465
40150	475
401NSM	69
401SM	69
401SP	70
401SP-SET	70
40201	475
40221	334
40222	335
40223	335
40224	335
40251	475
40280	471
40281	471
420-100-200	330
420-120-1000	330
420-120-1250	330
420-120-1500	330
420-120-250	330
420-120-300	330
420-120-400	330
420-120-500	330
420-120-600	330
420-120-800	330
420-140-400	330
420-175-400	330
420-50-100	330
420-50-200	330
420-60-120	330
420-60-300	330
420-80-160	330
420SC-25	332
420SC-50	332
42301	475
42302	475
42304	475
434-10	463
434-12	463
434-18	463
434-25	463
434-32	463
434-38	463
434-6	463
434-S3-EUR	463
434-S6-EUR	463
43603	336
43605	336
43607	336
43611	336
43613	336
43615	336
43616	336
43617	336
43618	338
43619	338
43621	337
43631	337
43633	337
442	462
449	462
451	462
4559-12	467
4559-18	467
4559-24	467
4559-30	467
4559-36	467
4559-42	467
471	134
472	134
474	134
474A	134
474B	134
474-125-0.60	463
474-125-0.80	463
474-150-0.80	463
4750-2PP-1	476
4750-3PB-1	476
4750-DHO-1	476
4750-EP-1	476
4750-HDLB-1	476
4750-HHO-2	476
4750-KP-1	476
4750-QRLB-1	476
4750-UP-1	476
4750-VMPH-1	476
4804NLDNSS	73
482	134
483	134
484	134
4-102	239
4-105A	239
4-110A	239
4-138-08-1-0	452
4-138-10-1-0	452
4-138-12-1-0	452
4-140-06-1-0	452
4-140-08-1-0	452
4-140-10-1-0	452
4-140B	239
4-150-07-3-0	452
4-152-08-2-2	453
4-153-08-1-2	453
4-154-08-2-2	454
4-155-08-2-0	454
4-155-10-2-0	454
4-183-04-2-2	454
4-183-05-2-2	454
4-183-06-2-0	454
4-183-06-2-2	454
4-183-07-2-0	454
4-183-08-2-0	454
4-183-10-2-0	454
4-186-04-2-0	455
4-186-04-2-2	455
4-186-05-2-0	455
4-186-05-2-2	455
4-186-06-2-0	455
4-186-06-2-2	455
4-186-07-2-0	455
4-186-08-2-0	455
4-187-04-2-0	455
4-187-06-2-0	455
4-187-06-2-2	455
4-187-07-2-0	455
4-187-08-2-0	455
4-188-06-2-0	455
4-272-06-3-0	456
4-288-06-2-0	455
4-2A	239
4-33B	239
4-35B	239
4-53B	239
4-6	239
4-612	240
4-614	240
4-616	240
4-618	240
4-620	240
4-622	240
4-624	240
4-626	240

Item	Page
4-628	240
4-630	240
4-632	240
4-634	240
4-636	240
4-638	240
4-640	240
4-642	240
4-644	240
4-646	240
4-648	240
4M04T	403
4M10T	403
4M-610	244
4M-611	244
4M-612	244
4M-613	244
4M-614	244
4M-615	244
4M-616	244
4M-617	244
4M-618	244
4M-619	244
4M-620	244
4M-621	244
4M-622	244
4M-623	244
4M-624	244
4M-625	244
4M-626	244
4M-627	244
4M-629	244
4M-630	244
4M-632	244
4M-634	244
4M-636	244
4T06T	399
4T10T	399
50001	50
50003	50
50005	50
50007	50
5000-1	58
5000-2	59
5000-3	60
5000-ST	58
50081	251
501-I-DTT	62
501CI-II	64
501ED-CDI	68
501MRMH	76
502CF-II	64
502LDFN	74
502LDFNSS	72
50601	144
50603	174
50605	171
50607	170
50609	214
50611	143
50613	173
50615	172
50619	214
50622	169
50661	145
50662	145
50663	176
50664	175
50665	176
50666	175
50667	215
50668	215
50669	215
50671	174
50672	145
50673	176
50681	144
50721	44
50725	44
50730	42
50740	42
50741	43
50742	43
50743	43
50740B	42
50740BL	42
50740O	42
50741B	43
50741BL	43
50741O	43
50742B	43
50742BL	43
50743B	43
50743BL	43
50765	42
50766	43
50767	43
50768	43
50765B	42
50765BL	42
50765O	42
50766B	43
50766BL	43
50766O	43
50767B	43
50767BL	43
50768B	43
50768BL	43
50790	42
50791	43
50792	43
50790B	42
50790BL	42
50790O	42
50791B	43
50791BL	43
50791O	43
50792B	43
50792BL	43
50792O	43
50850	38
50851	39
50855	39
50851B	39
50851BL	39
50855B	39
50855BL	39
50860	36
50861	38
50865	39
50867	40
50868	40
50860B	36
50860BL	36
50865B	39
50865BL	39
50868B	40
50868BL	40
50871	41
50880	37
50881	37
50883	36
50884	35
50885	35
50887	37
50888	37
50880B	37
50880BL	37
50881B	37
50881BL	37
50883B	36
50883BL	36
50884B	35
50884BL	35
50885B	35
50885B	35
50885BL	35
50887B	37
50887BL	37
50888B	37
50888BL	37
50890	36
50891	38
50895	39
50897	40
50898	40
50890B	36
50890BL	36
50895B	39
50895BL	39
50898B	40
50898BL	40
50901	41
50920	46
50921	46
50922	46
50923	46
50924	46
50949	45
50946B	45
50947B	45
50950	45
50951	45
50952	45
50953	45
50954	45
50990	34
50990B	34
50990BL	34
50NMIMH	79
50T-I	79
50T-I-SET	79
51-12	424
51-21	424
51-24	424
51-30	424
51-36	424
51PZ1-BOX/S50	301
51PZ2-BOX/S100	301
527V-160	488
527V-200	488
52H1-BOX/S50	301
52H2-BOX/S100	301
5AD150M	388
5AS150	388
5AS150L	388
5AS200	388
5AS380	388
5AS380L	388
5AS60	388
5E05H1G	391
5E05H1GR	394
5E10H2G	391
5E10H2GR	394
5E15H3G	391
5E15H3GR	394
5EA05H1G	393
5ES05H1G	392
5ES05H1GR	392
5ES05H2G	392
5ES05H2GR	392
5ES10H2G	392
5ES10H2GR	392
5ES15H3G	392
5ES15H3GR	392
5ES15H5G	392
5ES15H5GR	392
5G65H5G	395
5HD2S100	387
5HD2S500	387
5HS1S60	385
5HS2S100	385
5HS2S200	385
5HS2S35	385
5T-I	79
5T-I-SET	79
6002ED-CDI	68
6002LDIN	74
6002LDINSS	72
6004CF-II	64
6004-F-DTT	62
6004LDFE	74
6004LDFESS	72
6004LDFN	74
6004LDFNSS	72
6004MFRMH	76
6004MFRPH	75
6004TAA	67
6004-TC	85
600T-I	79
600T-I-SET	79
600TL-2	60
602NMRMHSS	77
61NSM	69
61SM	69
61SP	70
61SP-SET	70
625	462
625-DROP	462
625-PEAR	462
625-ROUND	462
64TX-T10BOX/S50	301
64TX-T15BOX/S50	301
64TX-T20BOX/S50	301
64TX-T25BOX/S25	301

Item	Page
64TX-T30BOX/S25	301
650	462
6520100	495
6520120	495
6520140	495
6520170	495
6520190	495
6520800	495
665	462
6950	146
6-0XS	260
6-107	259
6-110	259
6-113	259
6-140B	259
6-1A	260
6-1X	259
6-1XS	260
6-2B	260
6-2C	260
6-2X	259
6-2XS	260
6-342-08-1-0	456
6-342-08-1-2	456
6-342-08-2-2	456
6-342-10-1-0	456
6-342-12-1-0	456
6-343-08-3-0	456
6-343-10-3-0	456
6-344-08-2-2	457
6-345-08-2-2	457
6-3X	259
6-3XS	260
6-4A	259
6-4XS	260
6-5XS	260
6-618A	261
6-620A	261
6-622A	261
6-624A	261
6-626A	261
6-628A	261
6-630A	261
6-632A	261
6-634A	261
6-636	261
6-638	261
6-640	261
6-642	261
6-644	261
6-646	261
6-648	261
6-650	261
6-652	261
6-654	261
6-656	261
6-658	261
6-660	261
6-662	261
6-664	261
6-666	261
6-670	261
6-672	261
6-676	261
6-6XS	260
6-7	259
6C05T00	372
6C05T01	372
6C05T03	372
6C05T05	372
6C05T07	372
6C05T09	372
6C100T06	374
6C100T13	374
6C10T01	372
6C10T02	372
6C10T04	372
6C10T06	372
6C10T08	372
6C10T10	372
6C10T12	372
6C10T14	372
6C15T01	374
6C15T02	374
6C15T04	374
6C15T06	374
6C15T08	374
6C15T10	374
6C15T12	374
6C15T14	374
6C25T01	374
6C25T02	374
6C25T04	374
6C25T06	374
6C25T08	374
6C25T10	374
6C25T12	374
6C25T14	374
6C30T08	374
6C55T02	374
6C55T04	374
6C55T06	374
6C55T13	374
6C75T06	374
6C75T13	374
6CA100T02	378
6CA100T04	378
6CA100T06	378
6CA100T10	378
6CA30T02	378
6CA30T04	378
6CA30T06	378
6CA50T02	378
6CA50T04	378
6CA50T06	378
6CA50T10	378
6CA75T04	378
6CA75T06	378
6CD100T06	376
6CD100T13	376
6CD100T18	376
6CD10T10	376
6CD10T12	376
6CD30T08	376
6CD30T15	376
6CD55T06	376
6CD55T13	376
6CD55T20	376
6CD75T06	376
6CD75T13	376
6CF05T03	379
6CF05T03TB	380
6CF10T05	379
6CF10T05TB	380
6CF20T05	379
6CF20T05TB	380
6CF30T05	379
6CF30T05TB	380
6CH100T03	381
6CH20T02	381
6CH20T06	381
6CH30T02	381
6CH30T06	381
6CH60T03	381
6CL10T01	384
6CL20T02	384
6CL30T02	384
6CN100T02	377
6CN100T04	377
6CN100T06	377
6CN100T08	377
6CN100T10	377
6CN100T12	377
6CN55T02	377
6CN55T04	377
6CN55T06	377
6CN55T08	377
6CN55T10	377
6CN55T12	377
6CP02T05	382
6CP05T05	382
6CP10T06	382
6CT10T06	383
6CT10T10	383
6M-617A	265
6M-619A	265
6M-620A	265
6M-622A	265
6M-624A	265
6M-627A	265
6M-630	265
6M-631	265
6M-632	265
6M-634	265
6M-635	265
6M-636	265
6M-638	265
6M-641	265
6M-646	265
6MV-10	492
6MV-11	492
6MV-12	492
6MV-13	492
6MV-14	492
6MV-15	492
6MV-16	492
6MV-17	492
6MV-18	492
6MV-19	492
6MV-20	492
6MV-21	492
6MV-22	492
6MV-23	492
6MV-24	492
6MV-27	492
6MV-30	492
6MV-32	492
6MV-6	492
6MV-7	492
6MV-8	492
6MV-9	492
6MV/8T	481
6S01T03	400
6S.5T03	400
6ZV-1	492
6ZV-1.1/16	492
6ZV-1.1/4	492
6ZV-1.1/8	492
6ZV-1.3/16	492
6ZV-1/2	492
6ZV-11/16	492
6ZV-13/16	492
6ZV-15/16	492
6ZV-3/4	492
6ZV-3/8	492
6ZV-5/16	492
6ZV-5/8	492
6ZV-7/16	492
6ZV-7/8	492
6ZV-9/16	492
7029B	117
702NLDNSS	73
7033C	117
7038	117
7039B	117
706-1	280
706-2	280
706-3	280
706-4	280
7224	308
7502MRMH	76
751LDIN	74
751LDINSS	72
752LDINSS	72
752MFRMH	76
75MFIMHSS	79
7723	117
7725B	117
7727A	117
7731A	117
7731B	117
7750	177
7755-3/8	177
7800DMV-10	497
7800DMV-11	497
7800DMV-12	497
7800DMV-13	497
7800DMV-14	497
7800DMV-15	497
7800DMV-16	497
7800DMV-17	497
7800DMV-18	497
7800DMV-19	497
7800DMV-20	497
7800DMV-21	497
7800DMV-22	497
7800DMV-24	497
7800DMV-27	497
7800DMV-30	497
7800DMV-32	497
7800DMV-8	497
7800DZV-1	497
7800DZV-1.1/16	497
7800DZV-1.1/4	497
7800DZV-1.1/8	497

Item	Page
7800DZV-1.3/16	497
7800DZV-1/2	497
7800DZV-11/16	497
7800DZV-13/16	497
7800DZV-15/16	497
7800DZV-3/4	497
7800DZV-3/8	497
7800DZV-5/8	497
7800DZV-7/16	497
7800DZV-7/8	497
7800DZV-9/16	497
7811DMV	480
782-U	467
7-107	269
7-113	269
7-140B	269
7-1B	270
7-1C	270
7-1C	275
7-1X	270
7-1XS	270
7-2D	270
7-2F	270
7-2X	270
7-2XS	270
7-3X	270
7-3XS	270
7-4X	270
7-4XS	270
7-5X	270
7-5XS	270
7-6	269
7-6100	271
7-6104	271
7-6108	271
7-6112	271
7-6116	271
7-6118	271
7-6120	271
7-6122	271
7-6124	271
7-6126	271
7-6128	271
7-6130	271
7-6132	271
7-6134	271
7-6136	271
7-6138	271
7-6140	271
7-6142	271
7-6144	271
7-6146	271
7-6148	271
7-6152	271
7-6156	271
7-6160	271
7-6172	271
7-6184	271
7-624	271
7-626	271
7-628	271
7-630	271
7-632	271
7-634	271
7-636	271
7-638	271
7-640	271
7-642	271
7-644	271
7-646	271
7-648	271
7-650	271
7-652	271
7-654	271
7-656	271
7-658	271
7-660	271
7-662	271
7-664	271
7-666	271
7-668	271
7-670	271
7-672	271
7-674	271
7-676	271
7-678	271
7-680	271
7-682	271
7-684	271
7-686	271
7-688	271
7-690	271
7-692	271
7-694	271
7-696	271
7-6XS	270
7-8	269
7M-627	274
7M-630	274
7M-632	274
7M-635	274
7M-638	274
7M-641	274
7M-646	274
7M-650	274
7M-660	274
7M-665	274
7M-670	274
7M-675	274
8004NLDNSS	73
8004NMRMHSS	77
800NMIMH	79
802MFRFMHSS	78
8033A	119
8033C	119
8069 R US	125
8069 RC US	125
8070 R US	125
8070 RC US	125
8070V	493
8071 R US	125
8071 RC US	125
8071V	493
8071VLT	493
8072 R US	125
8072 RC US	125
8072V	493
8072VLT	493
8073 R US	125
8073 RC US	125
8073V	493
8073VLT	493
8074 R US	125
8074 RC US	125
8074V	493
8075 R US	125
8075 RC US	125
808050	288
808050A	289
808050L	288
808050P	288
808050S	288
808050S-22	301
808050TORX	289
808050TS	288
808506	281
808512	280
8150-1/2	216
8150-1/2V	496
8154-1/2V	496
8155-1/2	216
8160-1/2V	496
8162-1/2V	496
817V-10	483
817V-13	483
817V-6	483
817V-7	483
817V-8	483
8223	306
8224	306
8225	306
8226	306
8231	306
850002	469
850-1	462
86	125
862007	432
862013	432
862017	432
862021	432
862109	433
862209	433
863307	433
863313	433
865-1	462
87	125
87001	366
87002	366
87003	366
87004	366
87005	366
87006	366
87007	366
87008	366
87009	366
87010	366
87011	366
87012	366
87013	366
87014	366
87015	366
87016	363
87017	363
87018	363
87019	363
87020	363
87021	362
87024	367
87025	338
87026	338
87027	338
87028	371
87029	371
87030	371
87031	371
87032	369
87033	365
87034	365
87035	370
87036	370
87037	370
87038	370
87039	370
87040	370
87041	370
87042	370
87043	370
87044	370
87045	367
87046	368
87047	368
87048	368
87049	368
87050	368
87052	368
87054	368
87055	370
87056	370
87057	370
87058	370
87059	370
87060	370
87061	370
87062	370
87063	370
87064	370
87065	370
87066	370
87067	370
87068	370
87069	370
87070	370
87071	370
87079	362
87081	364
87082	364
87083	364
87084	365
8720	119
8723	119
8725	119
8725B	119
8727	119
8727A	119
8729	119
8729A	119
8731A	119
8807AW	133
8807W	133
8808AW	133
8808BW	133
8808CW	133
8808W	133
8809AW	133
8809BW	133

PRODUCT CODE INDEX

Item	Page
8809W	133
8810AW	133
8810W	133
8811AW	133
8811BW	133
8811W	133
8812AW	133
8812BW	133
8812W	133
8813AW	133
8813BW	133
8813W	133
8814AW	133
8814W	133
8815AW	133
8815BW	133
8815W	133
8816BW	133
8816CW	133
8816W	133
8817AW	133
8817W	133
8818AW	133
8818W	133
8819AW	133
8819BW	133
8819CW	133
8819W	133
8905	129
8905A	129
8906	129
8906B	129
8907	129
8907A	129
8908	129
8908A	129
8909	129
8909A	129
8910	129
8910A	129
8911	129
8911A	129
8912	129
8913	129
8914	129
8915	129
8916	129
8-108	274
8-115	274
8-140B	274
8-1X	275
8-1XS	275
8-20	274
8-2E	275
8-2X	275
8-2XS	275
8-3X	275
8-3XS	275
8-4X	275
8-4XS	275
8-6100	276
8-6104	276
8-6108	276
8-6110	276
8-6112	276
8-6116	276
8-6120	276
8-6122	276
8-6124	276
8-6128	276
8-6132	276
8-6136	276
8-6138	276
8-6140	276
8-6144	276
8-6148	276
8-6152	276
8-6156	276
8-6160	276
8-6172	276
8-6184	276
8-6196	276
8-6208	276
8-6220	276
8-6232	276
8-6244	276
8-6256	276
8-646	276
8-648	276
8-652	276
8-654	276
8-656	276
8-658	276
8-660	276
8-664	276
8-666	276
8-668	276
8-670	276
8-672	276
8-676	276
8-678	276
8-680	276
8-682	276
8-684	276
8-688	276
8-692	276
8-694	276
8-696	276
8-698	276
8-7	274
8-8	274
8FB25F38M	404
8FG38MF	404
8FR38M25F	404
8G025W	404
8G04W	404
8H1G	404
8H2525D06	404
8H2538D06	404
8H3825D06	404
8H3825D10	404
8H3825D20	404
8H3838D06	404
8H3838D10	404
8H3838D20	404
8M14L7P	406
8M7L7P	406
8R38D	405
8R38DF	405
8R38DM	405
8RH38D	405
8RH38DF	405
8RH38DM	405
8V38N	406
8V38R	406
900-0-1KIT	55
900-2-01KIT	55
900-3-01KIT	55
900T-020-100	135
900T-025-100	135
900T-030-100	135
900T-040-150	135
900T-050-150	135
900T-060-200	135
900T-080-200	135
900T-094	135
900T-100-200	135
900T-109	135
900T-10US	135
900T-125	135
900T-141	135
900T-156	135
900T-188	135
900T-219	135
900T-250	135
900T-313	135
900T-375	135
900T-8MM	135
9029 R US	124
9031 R US	124
9031 RC US	124
9031-T US	124
9033 R US	124
9035 R US	124
9070 R US	125
9070 RC US	125
9070 RP US	124
9070 RPC US	124
9071 R US	125
9071 RC US	125
9071 RP US	124
9071 RPC US	124
9072 R US	125
9072 RC US	125
9072 RP US	124
9072 RPC US	124
9073 R US	125
9073 RC US	125
9073 RP US	124
9073 RPC US	124
91NLDNSS	73
92NLDNSS	73
9526-1/2	442
9526-3/4	442
9526-3/8	442
9526-5/8	442
9526-7/8	442
9526-7/16	442
9526-9/16	442
9526-11/16	442
9526-1	442
9526-1-1/2	442
9526-1-1/4	442
9526-1-1/8	442
9526-13/16	442
9526-1-3/8	442
9526-15/16	442
9527-1/2	442
9527-3/4	442
9527-3/8	442
9527-5/8	442
9527-7/8	442
9527-7/16	442
9527-9/16	442
9527-11/16	442
9527-1	442
9527-1-1/2	442
9527-1-1/4	442
9527-1-1/8	442
9527-13/16	442
9527-1-3/8	442
9527-15/16	442
9529-1/2	442
9529-1/4	442
9529-3/4	442
9529-3/8	442
9529-5/8	442
9529-7/8	442
9529-7/16	442
9529-9/16	442
9529-11/16	442
9529-1	442
9529-1-1/2	442
9529-1-1/4	442
9529-1-1/8	442
9529-13/16	442
9529-1-3/8	442
9529-15/16	442
9574-200	469
97411	50
99965	50
9-12-51/3806-KP	424
9-1D	275
9-2G	275
9-36-23-KP	423
9-467-00-0-0	458
9-484-3.2-10	459
9-484-3.2-1P	459
9-484-5.2-10	459
9-484-5.2-1P	459
9-485-06-10	459
9-485-06-1P	459
9-485-09-10	459
9-485-09-1P	459
9-485-13-10	459
9-485-13-1P	459
9-486-04-10	459
9-486-04-1P	459
9-486-05-10	459
9-486-05-1P	459
9-486-07-1P	459
9-486-C-10	460
9-486-C-1P	460
9A55T06	398
9A55T13	398
9E100T10	398
9E55T06	398
9E55T13	398
9H55T06	398
AB-10A	126
AB-12A	126
AB-15A	126
AB-18A	126
AB-24A	126
AB-4A	126

Item	Page	Item	Page	Item	Page	Item	Page	Item	Page
AB-6A	126	B-616	181	BD-1208	185	BE-7806	300	BE-8630S	482
AB-8A	126	B-618	181	BD-1210	185	BE-7807	300	BE-8640	294
AP-10A	126	B-620	181	BD-1212	185	BE-7808	300	BE-8640S	482
AP-12A	126	B-622	181	BD-1214	185	BE-7809	300	BE-8702	298
AP-15A	126	B-624	181	BD-1216	185	BE-7910	296	BE-8703	298
AP-18A	126	B-626	181	BD-1218	185	BE-7915	296	BE-8704	298
AP-24A	126	B-628	181	BD-1220	185	BE-7920	296	BE-8705	298
AP-4A	126	B-630	181	BD-1222	185	BE-7925	296	BE-8706	298
AP-6A	126	B-632	181	BD-1224	185	BE-7927	296	BE-8708	298
AP-8A	126	B-70	178	BD-1226	185	BE-7930	296	BE-8710	298
APC-10A	126	BA-10A	196	BD-1228	185	BE-7940	296	BE-8725	298
APC-12A	126	BA-10A-3P	200	BD-1230	185	BE-8010	291	BE-8810	296
APC-6A	126	BA-10A-3S	200	BD-1232	185	BE-8010S	482	BE-8820	296
APC-8A	126	BA-10A-4S	200	BD-608	186	BE-8020	291	BE-8823	296
B-101	178	BA-10HBA	197	BD-610	186	BE-8020L	291	BE-8865	290
B-108	178	BA-10LA	198	BD-611	186	BE-8030	291	BE-8870	290
B-110	178	BA-12A	196	BD-612	186	BE-8040	291	BE-8880	290
B-115	178	BA-12A-4P	200	BD-614	186	BE-8040S	482	BE-8890	290
B-118	178	BA-12HBA	197	BD-616	186	BE-8050S	482	BE-8906	297
B-1208	180	BA-12LA	198	BD-618	186	BE-8065S	482	BE-8907	297
B-1210	180	BA-3A	196	BD-620	186	BE-8144	291	BE-8908	297
B-1211	180	BA-3HBA	197	BD-622	186	BE-8150	291	BE-8909	297
B-1212	180	BA-3LA	198	BD-624	186	BE-8155	291	BE-8910	297
B-1214	180	BA-4A	196	BD-626	186	BE-8160	290	BE-8915	297
B-1216	180	BA-4HBA	197	BD-628	186	BE-8210	291	BE-8920	297
B-1217	180	BA-4LA	198	BD-630	186	BE-8220	291	BE-8925	297
B-1218	180	BA-5A	196	BD-632	186	BE-8220S	482	BE-8927	297
B-1219	180	BA-5A-1S	200	BD-808	183	BE-8230	291	BE-8930	297
B-1220	180	BA-5HBA	197	BD-810	183	BE-8230S	482	BE-8940	297
B-1222	180	BA-5LA	198	BD-812	183	BE-8240	291	BE-8945	297
B-1224	180	BA-6A	196	BD-814	183	BE-8250	291	BE-8985	469
B-1226	180	BA-6HBA	197	BD-816	183	BE-8255	291	BE-9001	297
B-1228	180	BA-6LA	198	BD-818	183	BE-8255S	482	BE-9002	297
B-1230	180	BA-7A	196	BD-820	183	BE-8260	290	BE-9003	297
B-1232	180	BA-7A-1P	200	BE-6990-IP10	71	BE-8330	291	BE-9881	281
B-140A	178	BA-7A-2P	200	BE-6990-IP10-KL	71	BE-8340	291	BE-9881S	483
B-15	178	BA-7A-2S	200	BE-6990-IP15	71	BE-8350	291	BE-9885	282
B-20A	178	BA-7HBA	197	BE-6990-IP15-KL	71	BE-8355	291	BE-9886	282
B-409	183	BA-7LA	198	BE-6990-IP6	71	BE-8360	291	BE-9913	283
B-40A	178	BA-8A	196	BE-6990-IP6-KL	71	BE-8450	291	BFE-8	178
B-52A	177	BA-8HBA	197	BE-6990-IP7	71	BE-8455	291	BHMD-30	201
B-52ARK	177	BA-8LA	198	BE-6990-IP7-KL	71	BE-8577	289	BITH0201	155
B-52EHA	177	BB-526	183	BE-6990-IP8	71	BE-8600	295	BITH0301	155
B-52EHFA	177	BB-52A	177	BE-6990-IP8-KL	71	BE-8600S	482	BITH0302	157
B-52EHLA	177	BB-52EHA	177	BE-6990-IP9	71	BE-8601	295	BITH03T01	196
B-52EHRK	177	BCF20	185	BE-6990-IP9-KL	71	BE-8602	295	BITH0401	155
B-52EHRKA	177	BCF22	185	BE-6990TX-T10KL	71	BE-8610	295	BITH0402	157
B-53A	177	BCF24	185	BE-6990TX-T15KL	71	BE-8610L	295	BITH0403	196
B-608	181	BCF26	185	BE-6990TX-T6-KL	71	BE-8610S	482	BITH0404	198
B-610	181	BCF28	185	BE-6990TX-T7-KL	71	BE-8620	295	BITH05001	155
B-611	181	BCF30	185	BE-6990TX-T8-KL	71	BE-8620L	295	BITH0501	155
B-612	181	BCF32	185	BE-6990TX-T9-KL	71	BE-8620S	482	BITH0502	157
B-614	181	BCF34	185	BE-7805	300	BE-8630	294	BITH0503	196

PRODUCT CODE INDEX

Item	Page
BITH0504	198
BITH0601	155
BITH0602	157
BITH0603	196
BITH0604	198
BITH0701	155
BITH0702	157
BITH0703	196
BITH0704	198
BITH0801	155
BITH0802	157
BITH0803	196
BITH0804	198
BITH0805	235
BITH0806	237
BITH1001	155
BITH1001	196
BITH1002	157
BITH1004	198
BITH1005	235
BITH1006	237
BITH1201	196
BITH1202	198
BITH1203	235
BITH1204	237
BITH1601	235
BITH1602	237
BITH1801	235
BITH1802	237
BITH2.501	155
BITH2001	235
BITH2002	237
BITH3.501	155
BITH3.502	157
BITH4.501	155
BITH4.502	157
BITHB0301	156
BITHB03T01	197
BITHB0401	156
BITHB0402	156
BITHB0402	197
BITHB0501	156
BITHB0502	197
BITHB0601	156
BITHB0601	156
BITHB0602	197
BITHB0701	156
BITHB0702	197
BITHB0801	156
BITHB0802	197
BITHB1001	197
BITHB1201	197
BITHB4.501	156
BITHB4.501	197
BITHS01	200
BITHS02	200
BITHS03	200
BITHS04	200
BITHS04	238
BITHS05	200
BITHS05	238
BITPH0102	200
BITPH0202	200
BITPH0302	200
BITPH0302	238
BITPH0401	200
BITPH0401	238
BM-1206	188
BM-1207	188
BM-1208	188
BM-1209	188
BM-1210	188
BM-1211	188
BM-1212	188
BM-1213	188
BM-1214	188
BM-1215	188
BM-1216	188
BM-1217	188
BM-1218	188
BM-1219	188
BM-1220	188
BM-1221	188
BM-1222	188
BM-1223	188
BM-1224	188
BM-1226	188
BM-605.5	189
BM-606	189
BM-607	189
BM-608	189
BM-609	189
BM-610	189
BM-611	189
BM-612	189
BM-613	189
BM-614	189
BM-615	189
BM-616	189
BM-617	189
BM-618	189
BM-619	189
BM-620	189
BM-621	189
BM-622	189
BM-623	189
BM-624	189
BMD-606	192
BMD-607	192
BMD-608	192
BMD-609	192
BMD-610	192
BMD-611	192
BMD-612	192
BMD-613	192
BMD-614	192
BMD-615	192
BMD-616	192
BMD-617	192
BMD-618	192
BMD-619	192
BMD-620	192
BMD-622	192
BMD-623	192
BMD-624	192
BMD-625	192
BS-05B	218
BS-12B	218
BS-130	178
BS-130B	178
BS-131BA	178
BS-41AA	217
BS-52A	216
BS-71ARKA	217
BS-71CBA	217
BU-1212	183
BU-1214	183
BU-1216	183
BU-1218	183
BU-1220	183
BU-1222	183
BU-1224	183
BWM-0810	118
BWM-1011	118
BWM-1012	118
BWM-1113	118
BWM-1213	118
BWM-1214	118
BWM-1315	118
BWM-1415	118
BWM-1417	118
BWM-1618	118
BWM-1719	118
BWM-1821	118
BWM-1922	118
BWM-2124	118
BWM-2224	118
BWM-2427	118
BWM-2730	118
BWM-3032	118
C-10	350
C-12	350
C-120	351
C-124	351
C-125	351
C-126	351
C-132	351
C-133	351
C-15	350
C-16	350
C-20	350
C-24	350
C-28	350
C-32	350
C-36	350
C-40	351
C-42	351
C-422	351
C-44	351
C-46	351
C-60	351
C-612	355
C-616	355
C-62	351
C-621	355
C-709	355
C-715	355
C-718	355
C-72	351
C-73	351
C-74	351
C-75	351
C-8	350
C-80	355
C-803	354
C-807	354
C-80A	355
C-812	354
C-818	354
C-82	355
C-824	354
C-82A	355
C-83	355
C-836	354
C-84	355
C-842	354
C-844	354
C-85	355
C-858	354
C-86	355
CC-10AAW	330
CC-10LAAW	330
CC-1-1/2AAW	330
CC-12AAW	330
CC-12LAAW	330
CC-1AAW	330
CC-2AAW	330
CC-3AAW	330
CC-3LAAW	330
CC-402C	329
CC-402S	329
CC-403C	329
CC-403S	329
CC-404C	329
CC-404S	329
CC-406C	329
CC-406S	329
CC-408C	329
CC-408S	329
CC-410C	329
CC-410S	329
CC-412C	329
CC-412S	329
CC-4AAW	330
CC-4LAAW	330
CC-5AAW	330
CC-5LAAW	330
CC-6AAW	330
CC-6LAAW	330
CC-8AAW	330
CC-8LAAW	330
CG10F	371
CG240-1	371
CG240-10	371
CG240-11	371
CG240-2	371
CG240-3	371
CG240-5	371
CG240-6	371
CG240-7	371
CG240-8	371
CG240-9	371
CG243-2	371
CG243-5	371
CG250-10	371
CG250-1A	371
CG250-2	371
CG250-3	371
CG250-5	371
CG250-6	371
CG250-7	371
CG250-8A	371
CG250-9	371
CG253-2	371
CG270-10	371

Item	Page	Item	Page	Item	Page	Item	Page	Item	Page
CG270-11A	371	EB-2T	472	EX-28	474	H-51AB1	253	HM-1227	258
CG270-11A13	371	EB-21T	472	EX-29	474	H-51B	253	HM-1230	258
CG270-12	371	EB-22T	472	EX-LL	410	H-52EHRK	253	HM-1232	258
CG270-13	371	EB-23T	472	EX-RL	410	H-52EHRKA	253	HM-1235	258
CG270-1A	371	EB-24T	472	EX-RM	410	H-A1	253	HM-1236	258
CG270-2	371	EB-25T	472	EXS-30	474	HB-140A	254	HM-1238	258
CG270-20	371	EB-26T	472	EXS-9	474	HB-20A	253	HM-1241	258
CG270-3	371	EB-27T	472	FJ-20	334	HB-51B	253	HM-1246	258
CG270-5	371	EB-28T	472	FJ-30	334	HBP-0	342	HM-1250	258
CG270-6	371	EB-29T	472	FM10	457	HBP-2	342	HM-1254	258
CG270-7	371	EB-3T	472	GC600	411	HBP-2-0	342	HM-1255	258
CG270-8A	371	EB-30T	472	GS-1	474	HBP-3-0	342	HM-1260	258
CG273-2	371	EB-31T	472	GS-2	474	HBP-4	342	HNX-130	254
CG273-5	371	EB-32T	472	GS-3	474	HBP-5-0	342	HNX-130B	254
CG300-1	371	EB-34T	472	GS-4	474	HBP-6	342	HNX-131	254
CG300-2	371	EB-35T	472	GSC-12	463	HBP-8	342	HNX-131B	254
CG300-3	371	EB-36T	472	H-104	254	HD-628	258	HPD-1	341
CG300-5	371	EB-4T	472	H-104B	254	HD-630	258	HPD-2	341
CG300-6	371	EB-5T	472	H-110	254	HD-632	258	HPD-3	341
CG300-7	371	EB-6T	472	H-110B	254	HD-634	258	HPD-4	341
CG305-8	371	EB-7T	472	H-115	254	HD-636	258	HPDX-1	341
CG305-9	371	EB-8T	472	H-115B	254	HD-640	258	HPDX-2	341
CG343-1	371	EB-9T	472	H-1224	256	HD-642	258	HPDX-3	341
CG400-2	371	EWM-0607	113	H-1226	256	HD-644	258	HPDX-4	341
CG400-5	371	EWM-0708	113	H-1228	256	HD-646	258	HRFM10	458
CG400-6	371	EWM-0910	113	H-1230	256	HD-648	258	HSB-1.5	343
CG400-7	371	EWM-1011	113	H-1231	256	HD-652	258	HSB-2.5	343
CS-8	347	EWM-1213	113	H-1232	256	HK-1/16	136	HSB-4	343
CS-9	347	EWM-1415	113	H-1234	256	HK-1/4	136	HSF-100A	344
CT-12	335	EWM-1618	113	H-1236	256	HK-1/8	136	HSF-105A	344
CT-12-1	335	EWM-1719	113	H-1238	256	HK-10mm	136	HSF-10H	344
CT-12-4	335	EWM-2124	113	H-1240	256	HK-12mm	136	HSF-10M	344
CT-13	335	EWM-2224	113	H-1242	256	HK-14mm	136	HSF-10N	344
CT-13-1	335	EWM-2427	113	H-1244	256	HK-17mm	136	HSF-10S	344
CT-13-1/2	335	EWM-2730	113	H-1246	256	HK-2.5mm	136	HSF-10T	344
CT-13-1/2-1	335	EWM-3032	113	H-1248	256	HK-2mm	136	HSF-10XH	344
CT-13-1/2-4	335	EX-14-TEN-C	410	H-1250	256	HK-3/16	136	HSF-150A	344
CT-13-4	335	EX-14-VEN-C	410	H-1252	256	HK-3/32	136	HSF-151A	344
CT-14	335	EX-16-GNP-C	410	H-1254	256	HK-3/8	136	HSF-152A	344
CT-14-1	335	EX-19-XT9-C	410	H-1256	256	HK-3mm	136	HSF-155A	344
CT-14-4	335	EX-20-LAM-C	410	H-1258	256	HK-4mm	136	HSF-15H	344
CT-15	335	EX-20-XT11-C	410	H-1260	256	HK-5/32	136	HSF-15M	344
CT-15-1	334	EX-21A	474	H-1264	256	HK-5/64	136	HSF-15N	344
CT-15-4	335	EX-21B	474	H-1266	256	HK-5mm	136	HSF-15S	344
CW-4	335	EX-22A	474	H-1268	256	HK-6mm	136	HSF-15T	344
EB-1T	472	EX-22-PLS-C	410	H-1270	256	HK-7/32	136	HSF-15XH	344
EB-10T	472	EX-22-XT7-C	410	H-1272	256	HK-7/64	136	HSF-200A	344
EB-11T	472	EX-22-XT9-C	410	H-1274	256	HK-8mm	136	HSF-202A	344
EB-12T	472	EX-24A	474	H-1276	256	HK-9/64	136	HSF-205A	344
EB-14T	472	EX-24-XT7-C	410	H-140A	254	HK-.050	136	HSF-20H	344
EB-15T	472	EX-25A	474	H-20A	253	HM-1219	258	HSF-20M	344
EB-16T	472	EX-25B	474	H-41AA	253	HM-1222	258	HSF-20N	344
EB-17T	472	EX-26A	474	H-51AB	253	HM-1224	258	HSF-20S	344

PRODUCT CODE INDEX

Item	Page	Item	Page	Item	Page	Item	Page	Item	Page
HSF-20T	344	JHW-32	341	MA-4.5SA	158	MM-611	152	MSM-12HRC	152
HSF-20XH	344	JHW-48	341	MA-4-1/2A	155	MM-612	152	MSM-17HF	142
HSF-250A	344	JHW-56	341	MA-4-1/2HBA	156	MM-613	152	MSM-17HFTB	142
HSF-255A	344	JHW TOTE BAG	49	MA-41/2LA	157	MM-614	152	MSM-30HF	142
HSF-25H	344	KM653QR-BOX/S25	301	MA-4A	155	MMD-604	154	MSM-30HFTB	142
HSF-25M	344	M781	300	MA-4HBA	156	MMD-605	154	MSMD-12HRC	154
HSF-25N	344	M-102	147	MA-4LA	157	MMD-605.5	154	MSS-15RC	229
HSF-25S	344	M-104	147	MA-4SA	158	MMD-606	154	MSS-22F	213
HSF-25T	344	M-106A	146	MA-5A	155	MMD-607	154	MSS-22FTB	213
HSF-25XH	344	M-110	147	MA-5HBA	156	MMD-608	154	MSS-24RC	229
HSF-300A	344	M-115	147	MA-5LA	157	MMD-609	154	MSS-29F	213
HSF-305A	344	M-1208	148	MA-5SA	158	MMD-610	154	MSS-29FTB	213
HSF-30H	344	M-1210	148	MA-6A	155	MMD-611	154	MSS-33F	212
HSF-30M	344	M-1211	148	MA-6HBA	156	MMD-612	154	MSS-33TB	212
HSF-30N	344	M-1212	148	MA-6LA	157	MMD-613	154	MSS-47F	212
HSF-30S	344	M-1214	148	MA-6SA	158	MMD-614	154	MSS-47TB	212
HSF-30T	344	M-1216	148	MA-7A	155	MS-12-13H	206	MSSD-12RC	232
HSF-30XH	344	M-1218	148	MA-7HBA	156	MS-12-18H	206	MTB-3-16-E	468
HSF-8SET	345	M-124	147	MA-7LA	157	MS-14-10HRC	246	MTB-3-16-M-E	468
HSSG-A0616M	461	M-140A	147	MA-8A	155	MS-14-16RC	246	MTB-5-25-E	468
HSSG-A1020M	461	M-15A	146	MA-8HBA	156	MS-14-24RC	246	MTB-5-25-M-E	468
HSSG-A1225EC	461	M-42A	146	MA-8LA	157	MS-2-13H	204	MTB-8-25-E	468
HSSG-A1225M	461	M-42RK	146	MA-.050A	155	MS-4-10HRC	244	MTG-3-16-E	468
HSSG-A1625M	461	M-52A	146	MB-130	147	MS-4-12HRC	244	MTG-5-19-E	468
HSSG-C0616M	461	M-52ARK	146	MB-130B	147	MS-4-16RC	244	MTS-5-25-E	468
HSSG-C1020M	461	M-52EHA	146	MB-131BA	147	MS-4-23RC	244	MTS-8-25-E	468
HSSG-C1225EC	461	M-52EHFA	146	MB-52EHA	146	MS-6-8H	265	MTT8674	464
HSSG-C1225M	461	M-52EHRKA	146	MD-1210	150	MSB-12HRC	189	MTT-151	464
HSSG-D0606M	461	M-604	149	MD-1211	150	MSB-16F	167	MWS-10A	97
HSSG-D0807M	461	M-605	149	MD-1212	150	MSB-16FTB	167	MWS-12RC	108
HSSG-D1009M	461	M-606	149	MD-1214	150	MSB-17F	166	MWS-12RCF	109
HSSG-D1211EC	461	M-607	149	MD-1216	150	MSB-17FTB	166	MWS-12RCS	110
HSSG-D1211M	461	M-608	149	MD-1218	150	MSB-17RC	188	MWS-15A	97
HSSG-D1614M	461	M-609	149	MD-605	151	MSB-18HF	166	MWS-18A	97
HSSG-E0614M	461	M-610	149	MD-606	151	MSB-18HFTB	166	MWS-1B	97
HSSG-E1222EC	461	M-611	149	MD-607	151	MSB-20HRC	189	MWS-26	113
HSSG-E1222M	461	M-612	149	MD-608	151	MSB-20RC	188	MWS-27	136
HSSG-E1625M	461	M-614	149	MD-609	151	MSB-29F	165	MWS-30	121
HSSG-F0618M	461	M-616	149	MD-610	151	MSB-29FTB	165	MWS-31	113
HSSG-F1225M	461	M-618	149	MD-611	151	MSB-29HF	165	MWS-3510	115
HSSG-F1625M	461	M-620	149	MD-612	151	MSB-29HFTB	165	MWS-47	135
HSSG-G0618M	461	M-808	150	MD-614	151	MSB-39F	164	MWS-4RC	108
HSSG-G1220M	461	M-810	150	MD-616	151	MSB-39FTB	164	MWS-5A	97
HSSG-G1225EC	461	M-812	150	MD-618	151	MSBD-12HRC	192	MWS-6A	97
HSSG-G1225M	461	MA-10A	155	MFE-6	147	MSBD-19HRC	192	MWS-BMW12	118
HSSG-M0618M	461	MA-10LA	157	MM-604	152	MSC-118	26	MWS-BWM10	118
HSSG-M1227M	461	MA-2-1/2A	155	MM-605	152	MSC-118TB	26	NP-12-COM	419
HSSG-N1230M	461	MA-2A	155	MM-605.5	152	MSC-225	26	NP-12-TEN	419
HSSG-O1218M	461	MA-3-1/2A	155	MM-606	152	MSC-225TB	26	NP-12-VEN	420
HSSG-P0622M	461	MA-3-1/2LA	157	MM-607	152	MSH-15RC	258	NP-19-U7/8-HP	420
HSSG-P1230M	461	MA-3A	155	MM-608	152	MSH-15TB	258	NP-22-U7/8-HP	420
JHW-16	341	MA-3HBA	156	MM-609	152	MSH-20	250	O-471	134
JHW-24	341	MA-3LA	157	MM-610	152	MSH-20TB	250	O-471A	134

Item	Page
O-472	134
O-472A	134
O-474	134
O-474A	134
OES-0607	113
OES-0809	113
OES-1011	113
OES-1214	113
OES-1618	113
P113-50	64
P113-60	64
P-10	352
P-12	352
P-13	352
P-14	352
P-15	352
P-16	352
P-17	352
P-18	352
P-24	353
P-25	353
P-26	353
P-27	353
P-28	353
P-28A	353
P-29	353
P-3	352
P-30	353
P-32	353
P-38	353
P-39	353
P-4	352
P-40	353
P-42	353
P-5	352
P-51	352
P-52	352
P-53	352
P-54	352
P-55	352
P-56	352
P-57	352
P-58	352
P-59	352
P-6	352
P-60	352
P-61	352
P-62	352
P-63	353
P-64	353
P-65	353
P-8	352
PB13-0.5-10/14-1140-5P	429
PB13-0.5-14/18-1140-5P	429
PB13-0.5-R-10-1140-5P	429
PB13-0.5-R-14-1140-5P	429
PB13-0.5-R-18-1140-5P	429
PB13-0.5-R-24-1140-5P	429
PBS-7	354
PC-10-DTF	415
PC-10-DTR	415
PC-11-19-PS	422
PC-12-14-PS	422
PC-12-COM	415
PC-12-TEN	416
PC-12-VEN	416
PC-15-GNP	417
PC-15-TBX	416
PC-16-DECO	417
PC-17	346
PC-19-GT7	417
PC-20-LAM	418
PC-22-FILE-U7	417
PC-22-GT7	417
PC-24-PLS	418
PC-24-TIM	418
PC-27	346
PC-6-DRY	422
PC-8	347
PC-9-9/17-PS	422
PH-6604-1P	460
PH-6604-25	460
PL-10C	308
PL-114CS	316
PL-116C	316
PL-126C	316
PL-146C	317
PL-149C	317
PL-1515	326
PL-1519C	307
PL-1520C	307
PL-1523C	307
PL-1524C	307
PL-1600C	324
PL-1600C-1	324
PL-1600C-2	324
PL-1600C-3	324
PL-1606	323
PL-1612	323
PL-1620	323
PL-1621	323
PL-1622	323
PL-1623	323
PL-1624	323
PL-1625	323
PL-1626	323
PL-1627	323
PL-1628	323
PL-1629	323
PL-1630	323
PL-1631	323
PL-167	313
PL-204C	309
PL-205C	309
PL-208	309
PL-209	309
PL-209X	309
PL-211BC	315
PL-211C	315
PL-40CS	312
PL-411C	312
PL-44C	312
PL-45C	312
PL-46C	312
PL-47C	312
PL-48C	313
PL-49C	313
PL-527	325
PL-528	325
PL-529	325
PL-529A	325
PL-529B	325
PL-529C	325
PL-529D	325
PL-530A	325
PL-530B	325
PL-530C	325
PL-530D	325
PL-531	326
PL-532	326
PL-533	326
PL-534	326
PL-57C	312
PL-6C	308
PL-75C	316
PL-76C	316
PL-77C	316
PL-8C	308
PL-95C	316
PL-98C	315
PLM-1CS	312
PLM-2C	313
PLS-6A	305
PS-12	349
PS-17	348
PS-3	349
PS-4	348
PS-8	349
PTB2025102	48
PTB2026602	48
PTB253580	48
PTB303440	48
Q-208	128
Q-210	128
QC-PAD-M	332
QC-PAD-S	332
QCB-1250	331
QCB-150	331
QCB-300	331
QCB-450	331
QCB-600	331
QCB-900	331
QCG-150	332
QCG-300	332
QCS-150	331
QCS-300	331
R6725MK	470
R6725ZK	470
R6950	470
R-1	50
R-10	50
R-11	50
R-13	50
R-13BLUE	49
R-13R	49
R-13RED	49
R-14	50
R-15	50
R-17	49
R-18BLUE	49
R-18RED	49
R-2	50
R-20	50
R-23	50
R-24	50
R-27	50
R-28	50
R-29	50
R-3	50
R-30	50
R-30X	50
R-31	50
R-36	50
R-37	50
R-4	50
R-41	50
R-42	50
R-43	50
R-47	50
R-48	50
R-49	50
R-5	50
R-8	50
R-8BLUE	49
R-8RED	49
R-9	49
RB-1214	120
RB-1618	120
RB-1820	120
RB-2022	120
RB-2024	120
RB-2428	120
RB-3036	120
RB-3440	120
RB-42	119
RB-44	119
RB-46	119
RB-48	119
RB-50	119
RB-52	119
RB-54	119
RB-56	119
RB-58	119
RB-60	119
RB-64	119
RB-68	119
RB-810	120
RBM-0708	121
RBM-0910	121
RBM-1112	121
RBM-1314	121
RBM-1517	121
RBM-1618	121
RBM-1921	121
RBM-22	120
RBM-23	120
RBM-24	120
RBM-25	120
RBM-26	120
RBM-27	120
RBM-29	120
RBM-30	120
RBM-32	120
RBM-36	120
RBO-1214	121
RBO-1618	121
RBO-2022	121
RBO-2024	121
RBO-2226	121
RBO-2428	121
RBO-2630	121
RBO-810	121
RC-25	49
RC-25-15P	49
RC-37	49

PRODUCT CODE INDEX

Item	Page	Item	Page	Item	Page	Item	Page	Item	Page
RC-37-15P	49	SA-8A	235	SDE-46	292	SFH-1820BWA	132	ST-1228	220
RC-50	49	SA-8LA	237	SDE-50	292	SFH-1820WA	132	ST-1230	220
RC-50-15P	49	SB-30	238	SDE-53	292	SH-10	345	ST-1231	220
RC-75	49	SB-40	238	SDE-8	292	SH-12	345	ST-1232	220
RECIP-SET-10	441	SB-40AA	217	SDP-1-3	295	SH-130	218	ST-1234	220
RFW-12	122	SB-526	225	SDP-2-4	295	SH-130B	218	ST-1236	220
RFW-14	122	SB-52EHA	216	SDP-2-8	295	SH-131BA	218	ST-1238	220
RFW-16	122	SB-59/S15-1	302	SDP-2-ST	295	SH-16	345	ST-1240	220
RFW-18	122	SB-59/S15-2	302	SDP-3-6	295	SH-2	345	ST-1242	220
RFW-20	122	SB-59/S15-3	302	SDP-4-6	295	SH-3	345	ST-1244	220
RFW-22	122	SB-59/S15-4	302	SDR-22	292	SH-4	345	ST-1246	220
RFW-24	122	SC127V	499	SDR-24	292	SH-6	345	ST-1248	220
RFW-26	122	SC150NGV	499	SDR-26	292	SH-8	345	ST-612	222
RFW-28	122	SCF36	224	SDR-28	292	SHF-10	345	ST-614	222
RFW-30	122	SCF38	224	SDR-30	292	SHF-10L	345	ST-616	222
RFW-32	122	SCF40	224	SDS-33	292	SHF-12	345	ST-618	222
S-102P	218	SCF42	224	SDS-62	292	SHF-12S	345	ST-619	222
S-10A	217	SCF44	224	SE-15-24	424	SHF-16	345	ST-620	222
S-110P	218	SCF46	224	SE-15-30	424	SHF-16L	345	ST-622	222
S-115P	218	SCF48	224	SE-16-21	424	SHF-2	345	ST-624	222
S-121P	218	SCF50	224	SFH-1808AW	132	SHF-20	345	ST-625	222
S-140A	218	SCF52	224	SFH-1808BW	132	SHF-3	345	ST-626	222
S-15A	217	SCF54	224	SFH-1808CW	132	SHF-4	345	ST-628	222
S-20A	217	SCF56	224	SFH-1808W	132	SHF-4S	345	ST-630	222
S-40AA	217	SCF58	224	SFH-1809AW	132	SHF-6	345	ST-632	222
S-41AA	217	SCF60	224	SFH-1809BW	132	SHF-8	345	ST-634	222
S-41RK	217	SCF62	224	SFH-1809W	132	SHF-8S	345	ST-636	222
S-52A	216	SCF64	224	SFH-1810AW	132	SMD-1213	232	ST-640	222
S-52ARK	216	SD-1216	225	SFH-1810BW	132	SMD-1214	232	ST-812	224
S-52EHA	216	SD-1218	225	SFH-1810W	132	SMD-1215	232	ST-814	224
S-52EHFA	216	SD-1220	225	SFH-1811AW	132	SMD-1216	232	ST-816	224
S-52EHLA	216	SD-1222	225	SFH-1811W	132	SMD-1217	232	ST-818	224
S-52EHRKA	216	SD-1224	225	SFH-1812AW	132	SMD-1218	232	ST-820	224
S-52LAB	217	SD-1225	225	SFH-1812BW	132	SMD-1219	232	ST-822	224
S-52LARK	217	SD-1226	225	SFH-1812W	132	SMD-1221	232	ST-824	224
S-53A	216	SD-1228	225	SFH-1813AW	132	SMD-1222	232	ST-826	224
S-60D	218	SD-1230	225	SFH-1813W	132	SMD-1224	232	ST-828	224
S-70	218	SD-1232	225	SFH-1814AW	132	SMD-1227	232	ST-830	224
S/2000-221-0	61	SD-1234	225	SFH-1814BW	132	SMD-1230	232	ST-832	224
SA-10A	235	SD-1236	225	SFH-1814W	132	SQZ150003	464	ST-834	224
SA-10A-3P	238	SD-616	227	SFH-1815AW	132	SQZ150003-HSBL	464	ST-836	224
SA-10A-3S	238	SD-618	227	SFH-1815W	132	SQZ150003-SBL	464	ST-840	224
SA-10LA	237	SD-620	227	SFH-1816AW	132	ST-1212	220	STM-1210	229
SA-12A	235	SD-622	227	SFH-1816BW	132	ST-1214	220	STM-1211	229
SA-12A-4P	238	SD-624	227	SFH-1816W	132	ST-1216	220	STM-1212	229
SA-12A-4S	238	SD-626	227	SFH-1817AW	132	ST-1218	220	STM-1213	229
SA-12LA	237	SD-628	227	SFH-1817W	132	ST-1219	220	STM-1214	229
SA-16A	235	SD-630	227	SFH-1818AW	132	ST-1220	220	STM-1215	229
SA-16LA	237	SD-632	227	SFH-1818W	132	ST-1221	220	STM-1216	229
SA-18A	235	SD-634	227	SFH-1819AWA	132	ST-1222	220	STM-1217	229
SA-18LA	237	SD-636	227	SFH-1819BWA	132	ST-1224	220	STM-1218	229
SA-20A	235	SDE-4	292	SFH-1819CWA	132	ST-1225	220	STM-1219	229
SA-20LA	237	SDE-43	292	SFH-1819WA	132	ST-1226	220	STM-1220	229

Item	Page	Item	Page	Item	Page	Item	Page	Item	Page
STM-1221	229	TCQJO18A	80	TCQJRX32A	83	TCQJXM16A	82	TCQXOM36A	81
STM-1222	229	TCQJO20A	80	TCQJRXS10A	83	TCQJXM17A	82	TCQXSD16A	80
STM-1223	229	TCQJO22A	80	TCQJRXS12A	83	TCQJXM18A	82	TCQXSD24A	80
STM-1224	229	TCQJO24A	80	TCQJRXS14A	83	TCQJXM19A	82	TCQXSD32A	80
STM-1225	229	TCQJO26A	80	TCQJRXS16A	83	TCQJXM20A	82	TCQXX24A	83
STM-1226	229	TCQJO28A	80	TCQJRXS18A	83	TCQJXM21A	82	TCQXX26A	83
STM-1227	229	TCQJO30A	80	TCQJRXS22A	83	TCQJXM22A	82	TCQXX28A	83
STM-1228	229	TCQJO32A	80	TCQJRXS24A	83	TCQJXM23A	82	TCQXX30A	83
STM-1229	229	TCQJO34A	80	TCQJRXS30A	83	TCQJXM24A	82	TCQXX32A	83
STM-1230	229	TCQJO36A	80	TCQJRXSM10A	83	TCQJXM25A	82	TCQXX34A	83
STM-1232	229	TCQJO40A	80	TCQJRXSM11A	83	TCQJXM26A	82	TCQXX36A	83
STM-1234	229	TCQJO44A	80	TCQJRXSM12A	83	TCQJXM27A	82	TCQXX38A	83
STM-1236	229	TCQJO48A	80	TCQJRXSM13A	83	TCQJXM6A	82	TCQXX40A	83
SUP-20-LAM	414	TCQJO52A	80	TCQJRXSM14A	83	TCQJXM7A	82	TCQXX42A	83
TB-101	48	TCQJO8A	80	TCQJRXSM17A	83	TCQJXM8A	82	TCQXX44A	83
TB-102	48	TCQJOM10A	81	TCQJSD12A	80	TCQJXM9A	82	TCQXX46A	83
TB-103	48	TCQJOM11A	81	TCQJSD16A	80	TCQX068A	80	TCQXX48A	83
TB-104	48	TCQJOM12A	81	TCQJSD8A	80	TCQXD16A	80	TCQXX50A	83
TB-12	48	TCQJOM13A	81	TCQJX12A	83	TCQXD24A	80	TCQXX52A	83
TB-35	48	TCQJOM14A	81	TCQJX14A	83	TCQXD32A	80	TCQXX54A	83
TB-49	48	TCQJOM15A	81	TCQJX16A	83	TCQXO24A	80	TCQXX56A	83
TB-6024RA	44	TCQJOM16A	81	TCQJX18A	83	TCQXO26A	80	TCQXX58A	83
TB-6116	47	TCQJOM17A	81	TCQJX20A	83	TCQXO28A	80	TCQXX60A	83
TB-6119A	47	TCQJOM18A	81	TCQJX22A	83	TCQXO30A	80	TCQXX64A	83
TB-6121	46	TCQJOM19A	81	TCQJX24A	83	TCQXO32A	80	TCQXXB44A	82
TB-6123	46	TCQJOM21A	81	TCQJX26A	83	TCQXO34A	80	TCQXXB48A	82
TB-6124A	46	TCQJOM22A	81	TCQJX28A	83	TCQXO36A	80	TCQXXM17A	82
TB-6218A	47	TCQJOM23A	81	TCQJX30A	83	TCQXO38A	80	TCQXXM18A	82
TB-6220A	47	TCQJOM24A	81	TCQJX32A	83	TCQXO40A	80	TCQXXM19A	82
TCQJ022ARTH60	81	TCQJOM25A	81	TCQJX34A	83	TCQXO42A	80	TCQXXM20A	82
TCQJ032ARTH	81	TCQJOM26A	81	TCQJX8A	83	TCQXO44A	80	TCQXXM21A	82
TCQJ034ARTH	81	TCQJOM27A	81	TCQJX9A	83	TCQXO46A	80	TCQXXM22A	82
TCQJ036ARTH	81	TCQJOM6A	81	TCQJXB16A	82	TCQXO48A	80	TCQXXM23A	82
TCQJ038ARTH	81	TCQJOM7A	81	TCQJXB18A	82	TCQXO50A	80	TCQXXM24A	82
TCQJ044ARTH	81	TCQJOM8A	81	TCQJXB20A	82	TCQXO52A	80	TCQXXM25A	82
TCQJ048ARTH	81	TCQJOM9A	81	TCQJXB22A	82	TCQXO54A	80	TCQXXM27A	82
TCQJ050ARTH	81	TCQJRO12A	81	TCQJXB24A	82	TCQXO56A	80	TCQXXM30A	82
TCQJ052ARTH	81	TCQJRO14A	81	TCQJXBM13A	82	TCQXO58A	80	TCQXXM32A	82
TCQJBOER12	83	TCQJRO16A	81	TCQJXBM16A	82	TCQXO60A	80	TCQXXM34A	82
TCQJBOER14	83	TCQJRO18A	81	TCQJXBM18A	82	TCQXO64A	80	TCQXXM36A	82
TCQJBOER16	83	TCQJRO20A	81	TCQJXBM19	82	TCQXOM17A	81	TCQY052ARTH	81
TCQJBOER18	83	TCQJROM12A	81	TCQJXD12A	82	TCQXOM18A	81	TCQY056ARTH	81
TCQJBOER20	83	TCQJROM13A	81	TCQJXD14A	82	TCQXOM19A	81	TCQY060ARTH	81
TCQJBOER24	83	TCQJROM14A	81	TCQJXD16A	82	TCQXOM20A	81	TCQY068ARTH	81
TCQJBOERM16	83	TCQJROM15A	81	TCQJXD18A	82	TCQXOM21A	81	TCQYD12A-80	80
TCQJBOERM18	83	TCQJROM17A	81	TCQJXD22A	82	TCQXOM22A	81	TCQYD16A	80
TCQJD12A-80	80	TCQJRX18A	83	TCQJXD24A	82	TCQXOM23A	81	TCQYO18A	80
TCQJD16A	80	TCQJRX20A	83	TCQJXM10A	82	TCQXOM24A	81	TCQYO20A	80
TCQJD8A-72	80	TCQJRX22A	83	TCQJXM11A	82	TCQXOM25A	81	TCQYO22A	80
TCQJO10A	80	TCQJRX24A	83	TCQJXM12A	82	TCQXOM26A	81	TCQYO24A	80
TCQJO12A	80	TCQJRX26A	83	TCQJXM13A	82	TCQXOM27A	81	TCQYO26A	80
TCQJO14A	80	TCQJRX28A	83	TCQJXM14A	82	TCQXOM29A	81	TCQYO28A	80
TCQJO16A	80	TCQJRX30A	83	TCQJXM15A	82	TCQXOM30A	81	TCQYO30A	80

PRODUCT CODE INDEX

Item	Page
TCQYO32A	80
TCQYO34A	80
TCQYO36A	80
TCQYO38A	80
TCQYO40A	80
TCQYO42A	80
TCQYO44A	80
TCQYO46A	80
TCQYO48A	80
TCQYO50A	80
TCQYO52A	80
TCQYO56A	80
TCQYO60A	80
TCQYOM14A	81
TCQYOM15A	81
TCQYOM16A	81
TCQYOM17A	81
TCQYOM18A	81
TCQYOM19A	81
TCQYOM20A	81
TCQYOM21A	81
TCQYOM22A	81
TCQYOM23A	81
TCQYOM24A	81
TCQYOM25A	81
TCQYOM26A	81
TCQYOM27A	81
TCQYOM29A	81
TCQYOM30A	81
TCQYOM32A	81
TCQYOM34A	81
TCQYOM36A	81
TCQYRX18A	83
TCQYRX20A	83
TCQYRX22A	83
TCQYRX24A	83
TCQYRX26A	83
TCQYRX28A	83
TCQYRX30A	83
TCQYRX32A	83
TCQYRX34A	83
TCQYRX36A	83
TCQYRX38A	83
TCQYRX40A	83
TCQYRXS20A	83
TCQYRXS22A	83
TCQYRXS24A	83
TCQYRXS26A	83
TCQYRXS28A	83
TCQYRXS30A	83
TCQYRXS32A	83
TCQYRXS36A	83
TCQYRXSM16A	83
TCQYRXSM17A	83
TCQYRXSM18A	83
TCQYRXSM19A	83
TCQYRXSM20A	83
TCQYRXSM21A	83
TCQYSD12A	80
TCQYSD16A	80
TCQYX16A	83
TCQYX18A	83
TCQYX20A	83
TCQYX22A	83
TCQYX24A	83
TCQYX26A	83
TCQYX28A	83
TCQYX30A	83
TCQYX32A	83
TCQYX34A	83
TCQYX38A	83
TCQYX40A	83
TCQYX42A	83
TCQYX46A	83
TCQYX48A	83
TCQYX50A	83
TCQYX52A	83
TCQYXB24A	82
TCQYXB30A	82
TCQYXB32A	82
TCQYXB36A	82
TCQYXBM18A	82
TCQYXBM24A	82
TCQYXD20A	82
TCQYXD24A	82
TCQYXD30A	82
TCQYXM14A	82
TCQYXM15A	82
TCQYXM16A	82
TCQYXM17A	82
TCQYXM18A	82
TCQYXM19A	82
TCQYXM20A	82
TCQYXM21A	82
TCQYXM22A	82
TCQYXM23A	82
TCQYXM24A	82
TCQYXM25A	82
TCQYXM26A	82
TCQYXM27A	82
TCQYXM29A	82
TCQYXM30A	82
TCQYXM32A	82
TCQYXM36A	82
TCQZD24B	80
TCQZD24BDP	80
TCQZD32B	80
TCQZD32BDP	80
TCQZO32A	80
TCQZO32ADP	80
TCQZO34A	80
TCQZO36A	80
TCQZO36ADP	80
TCQZO38A	80
TCQZO38ADP	80
TCQZO40A	80
TCQZO40ADP	80
TCQZO42A	80
TCQZO44ADP	80
TCQZO46A	80
TCQZO46ADP	80
TCQZO48A	80
TCQZO48ADP	80
TCQZO50A	80
TCQZO50ADP	80
TCQZO52A	80
TCQZO52ADP	80
TCQZO54A	80
TCQZO54ADP	80
TCQZO56A	80
TCQZO56ADP	80
TCQZO58A	80
TCQZO58ADP	80
TCQZO60A	80
TCQZO60ADP	80
TCQZO64A	80
TCQZO64ADP	80
TCQZO66A	80
TCQZO66ADP	80
TCQZO68A	80
TCQZO68ADP	80
TCQZO72A	80
TCQZO72ADP	80
TCQZO76ADP	80
TCQZO80A	80
TCQZO80ADP	80
TCQZO88A	80
TCQZO96A	80
TCQZOM24A	81
TCQZOM24ADP	81
TCQZOM27A	81
TCQZOM27ADP	81
TCQZOM30A	81
TCQZOM30ADP	81
TCQZOM32A	81
TCQZOM34ADP	81
TCQZOM36ADP	81
TCQZOM38ADP	81
TCQZOM41ADP	81
TCQZOM46ADP	81
TCQZOM50A	81
TCQZOM50ADP	81
TCQZOM55A	81
TCQZOM55ADP	81
TCQZOM60ADP	81
TCQZOM65ADP	81
TCQZOM70ADP	81
TCQZSD24A	80
TCQZSD24ADP	80
TCQZSD32A	80
TCQZX26ADP	83
TCQZX34A	83
TCQZX34ADP	83
TCQZX36A	83
TCQZX36ADP	83
TCQZX38A	83
TCQZX38ADP	83
TCQZX40A	83
TCQZX40ADP	83
TCQZX42A	83
TCQZX42ADP	83
TCQZX46A	83
TCQZX46ADP	83
TCQZX48A	83
TCQZX48ADP	83
TCQZX50A	83
TCQZX50ADP	83
TCQZX52A	83
TCQZX52ADP	83
TCQZX54ADP	83
TCQZX56A	83
TCQZX56ADP	83
TCQZX58A	83
TCQZX58ADP	83
TCQZX60A	83
TCQZX60ADP	83
TCQZX64A	83
TCQZX64ADP	83
TCQZX66A	83
TCQZX66ADP	83
TCQZX68A	83
TCQZX68ADP	83
TCQZX70ADP	83
TCQZX72A	83
TCQZX72ADP	83
TCQZX76ADP	83
TCQZX80A	83
TCQZX80ADP	83
TCQZXM24A	82
TCQZXM24ADP	82
TCQZXM25A	82
TCQZXM26A	82
TCQZXM27A	82
TCQZXM27ADP	82
TCQZXM29A	82
TCQZXM30A	82
TCQZXM30ADP	82
TCQZXM32A	82
TCQZXM32ADP	82
TCQZXM34A	82
TCQZXM34ADP	82
TCQZXM36A	82
TCQZXM36ADP	82
TCQZXM41ADP	82
TCQZXM46ADP	82
TCQZXM50ADP	82
TCQZXM55ADP	82
TCQZXM60ADP	82
TLPT4NM	70
TLPT5NM	70
TLPT6NM	70
TM-1000	84
TM-1500	84
TM-2000	84
TM-2500	84
TM-290	84
TM-391	84
TM-391RSD	85
TM-392	84
TM-392RSD	85
TM-393	84
TM-393RSD	85
TM-394	84
TM-394RSD	85
TM-395	84
TM-395RSD	85
TM-492	85
TM-493	85
TM-750LW	84
TMAXS4.5E2	158
TMAXS4E2	158
TMAXS5E2	158
TMAXS6E2	158
TS38375	195
TS38394	195
TS38437	195
TS38472	195
TS38500	195
TS38512	195
TS38551	195
TS38562	195
TS38591	195
TS38625	195
TS38669	195
TS38687	195
TS38750	195
TS50100	235
TS50750	235
TS50812	235
TS50875	235

Item	Page
TS50937	235
TS51551	235
TS51591	235
TS51625	235
TS51669	235
TS51709	235
TS51750	235
TS51827	235
TSCS3813	195
TSFS3807	195
TSFS5005	235
TSMS3809	195
TSMS5107	235
TXQZOM32ADP	81
W26RC7	33
W26RC7B	33
W26RC7BL	33
W26TC4	33
W26TC4B	33
W26TC4BL	33
W40RC7	32
W40RC7B	32
W40RC7BL	32
W40TC4	32
W40TC4B	32
W40TC4BL	32
W53RC13	30
W53RC6BS	31
W53TC8	30
WG-3	472
WG-5	472
WG-6	472
WRS-1	289
WRST1	289
WRST4	289
WRST8	289
WS-1113C	116
WS-1142PC	116
WS-1164RC	107
WS-1168RC	107
WS-1168RCF	109
WS-1168RCS	110
WS-1170BSC	95
WS-1170RSC	98
WS-1170SCA	93
WS-1170YSC	99
WS-1171BSC	95
WS-1171RSC	98
WS-1171SCA	93
WS-1171YSC	99
WS-1172BSC	95
WS-1172RSC	98
WS-1172SCA	93
WS-1172YSC	99
WS-1174TA	93
WS-1175	93
WS-1190BSC	95
WS-1190SCA	93
WS-12	120
WS-12-12	203
WS-12-8	203
WS-14	122
WS-14-11	242
WS-14-14RC	242
WS-14-19RC	242
WS-1605	113
WS-16-8H	263
WS-1705A	111
WS-1710A	111
WS-2-13	202
WS-2-8	202
WS-3510	115
WS-4-11RC	240
WS-4-14	240
WS-4-19RC	240
WS-44	136
WS-45	135
WS-46	135
WS-474	134
WS-476	134
WS-4-7RC	240
WS-483	134
WS-4RWA	176
WS-5	121
WS-6-14HA	261
WS-7707	117
WS-8707	119
WSB-10HRC	181
WSB-10RC	180
WSB-12HF	163
WSB-12HFTB	163
WSB-13HRC	181
WSB-13RC	180
WSB-15F	162
WSB-15FTB	162
WSB-23F	162
WSB-23FTB	162
WSB-23HF	161
WSB-23HFTB	161
WSB-27F	161
WSB-27FTB	161
WSB-32F	160
WSB-32FTB	160
WSB-56F	159
WSB-56TB	159
WSB-5XT	178
WSB-6ADPA	167
WSB-7A	196
WSB-7U	183
WSBB-7RC	197
WSBD-13HRC	186
WSBD-13RC	185
WSBD-7RC	183
WSBD-9RC	185
WSBHMD-7	167
WSBS-10RC	196
WSBS-7LRC	198
WSBSP-8RC	200
WSC-100CA	78
WSC-102	23
WSC-102TB	23
WSC-130	19
WSC-130TB	19
WSC-137	23
WSC-137TB	23
WSC-1390	11
WSC-1390MM	11
WSC-1390SAE	11
WSC-1390TB	11
WSC-167	22
WSC-167TB	22
WSC-172	21
WSC-172TB	21
WSC-173	20
WSC-173TB	20
WSC-231	19
WSC-231TB	19
WSC-250CA	78
WSC-277	18
WSC-277TB	18
WSC-317	17
WSC-317TB	17
WSC-352	16
WSC-352TB	16
WSC-400CA	78
WSC-41	25
WSC-41TB	25
WSC-50CA	78
WSC-600CA	78
WSC-680	15
WSC-680MM	15
WSC-680SAE	15
WSC-680TB	15
WSC-80	25
WSC-80TB	25
WSC-88	24
WSC-88TB	24
WSC-95	24
WSC-95TB	24
WSC-960	13
WSC-960MM	13
WSC-960SAE	13
WSC-960TB	13
WSH-13	250
WSH-13TB	250
WSH-16RC	256
WSH-16TB	256
WSH-22	249
WSH-22TB	249
WSH-26RC	256
WSH-29	249
WSH-29TB	249
WSH-43	248
WSH-43TB	248
WSHD-11HRC	258
WSM-11HRC	149
WSM-11TRC	155
WSM-13F	141
WSM-13FTB	141
WSM-15HF	141
WSM-15HFTB	141
WSM-19HF	140
WSM-19HFTB	140
WSM-22F	140
WSM-22FTB	140
WSM-26HF	139
WSM-26HFTB	139
WSM-38HF	139
WSM-38HFTB	139
WSM-4TRC	158
WSM-7HBA	156
WSM-7RC	148
WSMB-29F	163
WSMB-29FTB	163
WSMD-10HRC	151
WSMD-6RC	150
WSMS-9LRC	157
WSS-14HRC	222
WSS-15F	211
WSS-15FTB	211
WSS-15RC	220
WSS-18HF	211
WSS-18HFTB	211
WSS-19F	210
WSS-19FTB	210
WSS-22F	210
WSS-22FTB	210
WSS-23RC	220
WSS-30F	209
WSS-30TB	209
WSS-38F	209
WSS-38TB	209
WSS-3XT	218
WSS-57F	208
WSS-57TB	208
WSS-814RC	224
WSSD-11HRC	227
WSSD-11RC	225
WSSS-6LRC	237
WSSS-6RC	235
WSSSP-4RC	238
WSX-17	269
WSX-20	267
WSX-20TB	267
WSX-21	266
WSX-21TB	266
WSX-28	266
WSX-28TB	266
WTC-11	320
X-110	268
X-115	268
X-12100	269
X-1234	269
X-1236	269
X-1240	269
X-1242	269
X-1244	269
X-1246	269
X-1248	269
X-1252	269
X-1254	269
X-1256	269
X-1258	269
X-1260	269
X-1264	269
X-1268	269
X-1270	269
X-1272	269
X-1276	269
X-1280	269
X-1282	269
X-1284	269
X-1288	269
X-1294	269
X-1296	269
X-20	268
X-20B	268
X-20C	268
X-41C	268
X-41CB	268
X-51B	267
X-52	268
X-52A1	268
X-52EHRK	267
X-52EHRK	268
X-52H36	268
XFN-0810	122
XFN-1214	122
XFN-1618	122
XFN-2022	122
XFN-2432	122
XFN-2836	122

1

1000V Tools ..... See Insulated Tools

A

Adapters, Hand
1/4" Drive 147-148
3/8" Drive 178-179
1/2" Drive 218-219
3/4" Drive 254, 255
Adapters, Impact
3/8" Drive 201
1/2" Drive 239
3/4" Drive 259
1" Drive 269-270
1-1/2' Drive 274
Adjustable Wrenches
Combination / Pipe 124
Comfort Grip 126
Construction 128
ergo® Ergonomic Handle 124-125
Standard, Black Finish 124-127
Standard, Chrome Finish 126-127
Appendix 501
Auger Bits 442
Awl, Scratch 469

B

Bandsaw Blades
Easy-Cut® 430
General Purpose 430
Portable Bandsaw Blades 429
Bevel, Carpenter's 469
Bits, Auger, Spade, and Step 442
Bolt Cutters 467
Borescope 471
Bow Saws and Blades 423-424
Breaker Bars
1/4" Drive 146-147
3/8" Drive 178-179
1/2" Drive 217, 219
3/4" Drive 253, 255
1" Drive 268
Brush, Wire 467
Budd Wheel Sockets
3/4" Drive 260
1" Drive 272
Burrs, Rotary 461

C

C-Clamps
C-Clamp, Copper Screw 329
C-Clamp, Heavy Service 330
C-Clamp, Standard Screw 329
C-Clamp, Hi-Visibility 329
Cabinets ..... (See Tool Storage)
Carts, Service 44
Calibration Systems, Torque
Multitest Calibration Systems 54-57
Multitest Motorized System 57
Suretest Calibration Systems 58-60
Test and Calibration Accessories 61
Chisels
Cape Chisels 351
Chisel Holder 349
Chisel & Punch Sets 346-349
Cold Chisels 350
Diamond Point Chisels 351
Extra Long Cold Chisels 351
Mason's 350
Rivet Buster 351
Round Nose Chisels 351
Slitting 350
Wood 463
Clamps
C-Clamps 329-330
L-Clamps 330
Quick-Clamps 331-332
Spring Clamps 332
Workholding Gravity 411
Conversion Chart 502
Creepers and Seats
Adjustable Swivel Seat Creeper 475
Heavy-Duty Drop Shoulder 475
Mechanic's Seat Creeper 475
Cutters
Bolt Cutters 467
Cable Cutters 320
Hose Cutters 338

D

Dial Torque Wrenches
Dial Type - Dual Scale 74
Dial Type - Single Scale Newton Meter 73
Dial Type - Single Scale SAE 72
Electronic 68
Digital Multimeter 471
Drag Link Sockets 1/2" Drive 238
DTT Digital Torque Testers 62-63

E

Electronic Torque Wrenches
Computorq II Electronic Torque Wrenches 64
Computorq3 Electronic Torque Wrenches 65
Dial 68
Torque & Angle 66-67
Extensions, Hand
1/4" Drive 147-148
3/8" Drive 178-179
1/2" Drive 218-219
3/4" Drive 254-255
1" Drive 268
Extensions, Impact
3/8" Drive 201
1/2" Drive 239
3/4" Drive 255
1" Drive 269-270
1-1/2" Drive 274
Eyebolts
Plain Pattern 472
Shoulder Pattern 472

F

Feeler Guage Sets 474
Files
Diagonal 448
Engineering File Set 448-449
Farmer's Double Duty 454
Filemaster 457-458
Chain Saw 458-459
File Cleaner 458
Flat Chisel Bit 452
Flat 444
Half Round 447
Hand 443
Handles 459-460
Homeowner's 453-454
Knife 448
Lathe 443
Mill Saws 445, 452
Needle Files and Sets 449-452
Plastic Cut 445
Round Chain Saw 458
Round 447
Saw 456
Slim Taper 455
Square 446
Taper Saw 454-455
Three Square 446
Warding 444
Flange Jacks 334

G

Gasket Scrapers 463
Gravity Clamp 411

H

Hacksaws
Hacksaw Frames 425-426
Hand Hacksaw Blades 428
Mini Hacksaws 427
Rodsaw Hacksaw Blades 428
Tungsten Carbide Hacksaw Blade 428
Hammers
Brass 343
Ball Pein 341-342
Claw 343
Cross Pein 342
Dead Blow 341
Drilling 342
Power Drive 341
Sledge 345
Soft Face 344
Soft Face Hammer Kit 345
Soft Face Hammer Tips 344
Handsaw System 410
Handsaws
Backsaw 413, 416, 419
Bowsaws & Blades 423-424
Compass Saw 414-415, 419, 422
Coping Saw 421
Dovetail 415
Drywall Saw 422
Folding Saw 420
General Purpose Saw 413, 415, 417, 420-421
Handsaw System 410
Japanese Style Pull Saws 422
Laminator 414, 418
Laplander Folding Saw 420
Plaster 418
Polystyrene 417
Stradivarius Musical Saw 421
Timber 418
Toolbox Saw 416, 419
Veneer Saw 414, 416, 420
Holesaw Accessories 436
Holesaws
Accessories 436
Bi-Metal Holesaws 435
Carbide-Tipped Holesaws 434
Holesaw Sets 432-433
Hydraulics
Aluminum Cylinders 378
Bottle Jacks 401, 402
Couplers 404-405
Double-Acting Cylinders 376
Fittings 404-405
Flat Body Cylinders and Kits 379-380
Flow Control Valves 406
Gauges 404
Hollow Hole Cylinders 381
Hoses 404
Lock Nut Cylinders 377
Low Profile Cylinders 384
Manifolds 406
Maintenance Kits 403
Presses 398
Pull Cylinders 382
Pump and Cylinder Kits 396-397
Pumps, Air 388-389
Pumps, Electric 390-394
Pumps, Gas 395
Pumps, Hand 385-387
Single Acting Cylinders 374-375
Spreaders 400
Threaded Hole Cylinders 383
Toe Jacks 399

I

Impact Driver, 3/8" Drive, Hand 201
Impact Sockets
and Sets ..... See Sockets and Sets, Impact
Insulated Tools
3/8" Drive Ratchet and Sockets 495
1/2" Drive Ratchet and Extensions 496
1/2" Drive Sockets 497
Adjustable Wrenches 493
Bolt Cutters 490
Cable Cutters 490
Carpet 500
Cross Wrench 491
Gloves 500
Hacksaw Frames 498
Hex Keys 494
Knives 499
Nutdrivers 483
Offset Box Wrenches 491
Open End Wrenches 492
Pliers 484-489
Scissors 499
Screwdrivers and Sets 482-483
Sets 480-481
T-Handle Socket Wrenches 494
Tweezers 499
Interchangeable Torque Heads
Box End 82-83
Fixed Square Drive 80
Flare Nut 83
Open End 80-81
Ratcheting Square Drive 80

J

Job Site Boxes 45

K

Knives, Utility 464-465

L

L-Clamps 330

M

Master Sets
Advanced Maintenance Service Set 18
Basic Electrical Repair Set 24
Basic Machine Repair Set 23
Basic Service Set 25
Electrical Maintenance Service Set 22
General Industrial Repair Set 24
General Service Set 25
Heavy Maintenance Service Set 21
Industrial Plumbing & Pipefitting Tool Set 23
Intermediate Maintenance Service Set 20
Intermediate Technician Tool Set 17
Maintenance Tool Sets 19
Mammoth Tool Set 10-11
Master Maintenance Service Set 16
Maxxum Tool Set 14-15
Mega Tool Set 12-13
Metric Heavy Equipment Service Set 26
Metric Maintenance Service Set 26

Master Sets, Metric
Mammoth Tool Set, Metric 10-11
Maxxum Tool Set, Metric 14-15
Mega Tool Set, Metric 12-13
Metric Heavy Equipment Service Set, Metric 26
Metric Maintenance Service Set, Metric 26
Mechanical Torque Testers, Comparator 85
Micrometer Adjustable Torque Wrenches
Comfort Grip 75
Interchangeable Head 79
Metal Handle Dual Scale 76
Metal Handle Flex-Head 78
Metal Handle Newton Meter 77
Quick Set Split Beam 78
Multimeter, Digital 471
Multi-Tools 464
Multipliers, Torque
Torque Multipliers - Plate Reaction 85
Torque Multipliers with Handles 84

N

Nail Puller 356
Nut Drivers 299-300

P

Pick-Up Tools 475
Pinch Bars & Sets 354-356
Pipe Tools
Chain Pipe Tong Assembly 335
Chain Pipe Tongs 335
Flange Jacks 334
Nipple Remover & Installer Kit 338
Pipe Chain Wrenches 335
Pipe Tong Replacement Jaw Sets 335
Pipe Wrenches, Aluminum 333
Pipe Wrenches, Cast Iron 333
Strap Wrench 334
Tube Benders 337
Tubing Cutters and Wheels 336
Tubing Flaring Tools 337
Universal 334
Pliers
Adjustable Joint 306
Alligator 306
Chain Nose 316
Combination Slip-Joint 308
Diagonal Cutting 311-313
Duck Bill 317
Electrical 318-319
End Cutting Nippers 313
Groove Joint Pliers 307
Heavy Duty Snap Ring & Tips 325
Lineman's Pliers 309-310
Lock Ring 326
Locking Pliers 322
Locking Pliers, Comfort Grip 321
Long Nose 317
Needle Nose 316
Nose Pliers 314-315
Nut Gripping Pliers 308
Sets 305
Side Cutters 311-313
Side Cutting Combination Pliers 307
Slip Joint Pliers 308
Snap (Retaining) Ring Pliers 323-326
Utility Superjoint 307
Water Pump 307-308
Wire Twister 320
Portable Bandsaw Blades 429
Pre-Set Interchangeable Head Torque Wrenches 79
Prybars
Comfort Grip Handle 354, 356
Ladyfoot 355
Pinch Bars 355
Roll Bars 355
Pullers
Blind Hole Puller Sets 365
Chain Puller 367
Collets 369-370
Hydraulic Pullers 368
Manual Master Gear Set 362
Pipe Nipple Remover/ Installer 369
Pressure Screw Points 371
Puller Accessories 371
Puller Sets, Gear 362-363
Pulling Plate 371
Replacement Parts 371
Slide Hammer 363
Stud Puller Housing 370
Stud Remover/Installer Set 370
Three Jaw Pullers 366
Two / Three Jaw Pullers 364-367
Two Jaw Pullers 364, 366
Punches
Brass 349, 353
Center 348, 353
Chisel Sets 346-347
Long Taper 353
Pilot 349, 352
Pin 352
Prick 353
Punch and Chisel Holder 349
Punch and Chisels Sets 346-349
Punch Sets 348-349
Solid 352

R

Rasps 456-457
Ratchets
1/4" Drive Black Narrow Head 146
1/4" Drive Chrome Flex Head 146
1/4" Drive Chrome Narrow Head 146-147
1/4" Drive Ratchet Wrench 147
3/8" Drive Black Narrow Head 177
3/8" Drive Black Round Head 177
3/8" Drive Chrome Flex Head 177
3/8" Drive Chrome Narrow Head 177, 179
3/8" Drive Chrome Round Head 177
3/8" Drive Spinner Disk 178
1/2" Drive Black Construction 217
1/2" Drive Black Narrow Head 216
1/2" Drive Black Round Head 216
1/2" Drive Chrome Flex Head 216
1/2" Drive Chrome Narrow Head 216, 219
1/2" Drive Chrome Round Head 216
1/2" Drive Chrome Round Head Lineman's 217
1/2" Drive Spinner Disk 218
3/4" Drive Black Reversible 253
3/4" Drive Chrome Reversible 253, 255
1" Drive Chrome 267
Reciprocating Sawblades
Bi-Metal Blades 438-439
Carbide Grit Blades 440
Carbide Tipped 440
Car Body 441
Demolition 439
Heavy-Duty Metal Cutting 441
Pallet Cutting 441
Reciprocating Sawblade Set 441
Wood Cutting Blades 440
Refrigeration Tools 470
Ret Rings®
3/4" Drive 259-260
1" Drive 270
1-1/2" Drive 275
Roll Cabinets ..... (See Tool Storage)
Rotary Burrs 461

S

Safety Information 529-532
Scrapers
Cabinet Scrapers 463
Carbide Scrapers and Blades 462
Gasket Scrapers 463
Screw Extractors and Sets 474
Screwdrivers and Sets
Ball-End Hex 298
Bit Holder — 1/4" Hex 289, 301
Cabinet 291,293
Hex Shank Screwdriver Bits 302
Insulated 480-483
Magnetizer/Eemagnetizer 300
Nutdrivers 299-300
Nutdrivers, Insulated 483
Offset 298
Phillips® 294-296
Pozidriv® 296
Ratcheting Magnetic 288-289, 301
Robertson® Screwdrivers 297
Sets, Comfort Grip 285-287
Sets, ergo® Handle 280-283
Sets, Precision 280
Sets, Premium Handle 283-285
Sets, Thru-Blade 279
Slotted 291-293
Torx® 296-297
Screwdrivers, Torque
Bahco Fixed Setting 71
Torky Torque Screwdrivers 71
Torque Screwdrivers - Micro-Adjustable 69
Torque Screwdrivers - Pre-Set 70
Set-up Wedges 472
Service Carts 44
Sets, Master Tool Sets ..... See Master Sets
Snips
Aviation Snips 466
Bulldog Aviation Snip 466
Long Nose Aviation Snip 466
Multi-Purpose Snip 467
Offset Aviation Snip 466
Straight Pattern Tin Snips 465
Sockets and Sets, Hand
1/4" Drive Combination Socket and Drive Tool Sets 139-145, 148
1/4" Drive Ball Hex Bit 156
1/4" Drive Deep 150-152, 154-155
1/4" Drive Hex Bit 155-158
1/4" Drive Long Hex Bit 157
1/4" Drive Stubby Hex Bit 158
1/4" Drive Phillips® 158
1/4" Drive Slotted 158
1/4" Drive Shallow 148-150, 152-154
1/4" Drive Torx® Bit 158
3/8" Drive Combination Socket and Drive Tool Sets 159-176, 179
3/8" Drive Ball Hex Bit 197, 199
3/8" Drive Crowfoot Wrenches 185
3/8" Drive Deep 186-187, 192-194
3/8" Drive Hex Bit 196-197
3/8" Drive Long Hex Bit 198
3/8" Drive Magnetic Hex Bit Holder 179
3/8" Drive Pentasocket 183
3/8" Drive Phillips® Bit 200
3/8" Drive Shallow 180-183, 188-191
3/8" Drive Slotted Bit 200
3/8" Drive Spark Plug 187
3/8" Drive Tamper-Resistant Torx® Bit 199
3/8" Drive Torx® Bit 199
3/8" Drive Turbosockets 195
3/8" Drive Universal 183-184
1/2" Drive Combination Socket and Drive Tool Sets 208-215, 219
1/2" Drive Crowfoot Wrenches 224
1/2" Drive Deep 225-228, 232-234
1/2" Drive Drag Link 238
1/2" Drive Hex Bit 235-236
1/2" Drive Long Hex Bit 237
1/2" Drive Pentasocket 225
1/2" Drive Phillips® Bit 238
1/2" Drive Shallow 220-224, 229-231
1/2" Drive Slotted Bit 238
1/2" Drive Torx® Bit 238
1/2" Drive Turbosockets 235
3/4" Drive Combination Socket and Drive Tool Sets 248-252
3/4" Drive Deep 258
3/4" Drive Shallow 256-258
1" Drive Combination Socket and Drive Tool Sets 266-267
1" Drive Shallow 269
Sockets and Sets, Impact
3/8" Drive Deep 202-204, 206-207
3/8" Drive Hex Bit 207
3/8" Drive Shallow 202, 205
3/8" Drive TURBOSOCKET® 195
3/8" Drive Universal Flex 202, 205
1/2" Drive Deep 242-243, 246-247
1/2" Drive Hex Bit 248
1/2" Drive Shallow 240-241, 244-245
1/2" Drive TURBOSOCKET® 235
1/2" Drive Universal Flex 241, 245
3/4" Drive Budd Wheel Deep Length 6-pt 260
3/4" Drive Deep 263
3/4" Drive Hex Drivers 264-265
3/4" Drive Shallow 261-262
1" Drive Budd Wheel 272
1" Drive Deep 272-273
1" Drive Shallow 269, 271-272, 274
1-1/2" Drive Shallow 276
Spade Bits 442
Speeders
3/8" Drive Chrome 178
1/2" Drive Chrome 217
Spinner Handle
1/4" Drive 146-147
3/8" Drive 179
Step Bits 442
Stud Remover 218

T

T-Handles
1/4" Drive Chrome 146-147
3/8" Drive Chrome 178-179
1/2" Drive Chrome 217, 219
3/4" Drive Black 253
3/4" Drive Chrome 253, 255
1" Drive Chrome 268
1-1/2" Drive Black 274
Tape Measures 468-469
Tool Belts and Pouches 476
Tool Storage
Canopy 35-36
Hand Carry, Metal 46-47
Hand Carry, Plastic 48
Job Site 45
Locker 38, 42
Pouches 50
Road Boxes 44
Roll Cabinets 30-43
Service Carts 44
Side Cabinets 39
Socket Rails & Clips 49
Socket Set Toolboxes 48
Tool Storage Combinations 30-43
Top Chests 30-44
Tote Bag 49
Workbench 46
Tool Sets, Master ..... (See Master Sets)
Torque Calibration Systems
Multitest Calibration Systems 54-57
Multitest Motorized System 57
Suretest Calibration Systems 58-60
Test and Calibration Accessories 61

Torque, Interchangeable Heads
Box End 82-83
Fixed Square Drive 80
Flare Nut 83
Open End 80-81
Ratcheting Square Drive 80
Torque Multipliers
Torque Multipliers - Plate Reaction 85
Torque Multipliers with Handles 84
Torque Screwdrivers
Bahco Fixed Setting 71
T-Handle Fixed 70
Torky Torque Screwdrivers 71
Torque Screwdrivers - Micro-Adjustable 69
Torque Screwdrivers - Pre-Set 70
Torque Testers, Digital DTT 62-63
Torque Testers,
Mechanical Comparator 85
Torque Wrenches, Electronic
Computorq II Electronic Torque Wrenches 64
Computorq3 Electronic Torque Wrenches 65
Dial 68
Torque & Angle 66-67
Torque Wrenches, Dial
Dial Type - Dual Scale 74
Dial Type - Single Scale Newton Meter 73
Dial Type - Single Scale SAE 72
Torque Wrenches, Micrometer Adjustable
Comfort Grip 75
Interchangeable Head 79
Metal Handle Dual Scale 76
Metal Handle Flex-Head 78
Metal Handle Newton Meter 77
Quick Set Split Beam 78
Torque Wrenches, Pre-Set
Interchangeable Head 79

U

Utility Knives and Blades 465
Universal Joints, Hand
1/4" Drive Chrome 147-148
3/8" Drive Chrome 178-179
1/2" Drive Chrome 218
3/4" Drive Chrome 254-255
Universal Joints, Impact
3/8" Drive 201
1/2" Drive 239
3/4" Drive 259
1" Drive 269-270
1-1/2" Drive 274
Utility Tool Sets
Mini Pick and Hook Set 475
Scraper and Pick Set 475

W

Wedges, Set-up 472
Wire Brush 467
Wire Strippers 318-319
Wood Chisels 463
Wrenches and Sets
Adjustable — see Adjustable Wrenches 124-127
Box End, Double Head 117-119
Combination, Flex-Head, 12-pt. 106
Combination, High Polish Finish 100-101
Combination, HI-VIS Red, 12-pt 98
Combination, HI-VIS Yellow, 12-pt 99
Combination, Offset, 12-pt. 104
Combination, Ratcheting, 12-pt. 107-108
Combination, Ratcheting, Flex-Head, 12-pt. 109
Combination, Ratcheting, Stubby, 12-pt. 110
Combination, Satin Finish 102-103
Combination, Stubby, 12-pt. 105
Combination, Supercombo®,
Black Finish, 12-pt. 94-95
Combination, Supercombo®,
Chrome Finish, 12-pt. 92-93, 96-97
Construction, Adjustable 128
Construction, Single Head 128
Flare Nut, Double Head, Chrome 122-123
Flare Nut, Ratcheting 122
Flex Head, Double 106
Hex Keys 136
Hex Key Sets 135-136
Hex Key Sets, T-Handle 135
Hex Key Sets, Folding 135
Open End, Double Angle Head, Chrome 112
Open End, Double Head, Chrome 111, 113
Open End, Double Head, Miniature 116
Open End, Double Head, Short 113
Pipe, Aluminum 333
Pipe, Cast Iron 333
Ratcheting Box End, Double Head, Offset 121
Ratcheting Box End, Double
Head, Straight 120-121
Ratcheting Box End, Single
Head, Straight 119-120
Ratcheting Flare Nut, Single Head 122
Spanner, Adjustable Face 134
Spanner, Adjustable Hook 134
Spanner, Adjustable Pin 134
Service, 30° Angle Head 114-115
Strap 334
Striking Face, Offset 133
Striking Face, Straight 132
Structural, Single Head 128
Structural, Single Head Offset 129
Tubular Handle, Offset Box 131
Tubular Handle, Open End 130
Tubular Handle, Straight Box 131
Tubular Handles 130
Wrenches, Micrometer Adjustable Torque
Comfort Grip 75
Interchangeable Head 79
Metal Handle Dual Scale 76
Metal Handle Flex-Head 78
Metal Handle Newton Meter 77
Quick Set Split Beam 78

Safety
Hand tools are generally designed to perform one function — do not use them improperly. Screwdrivers are not chisels, adjustables are not hammers and pliers are not intended to replace wrenches. Each of our product groups contains specific safety tips for proper tool usage. Additionally, wear appropriate clothing for the job, and always wear safety glasses. A special note on safety … use of hand sockets (chrome finish) with power drive (impact) equipment is a misuse of the tool and can result in serious injury.

Trademarks
The following are trademarks of Snap-on Incorporated in the United States, and some are registered in other countries. All other Snap-on trademarks, service marks, domain names, logos, and company names referred to in this catalog are either trademarks, registered trademarks, service marks, domain names, logos, company names of or are otherwise the property of Snap-on Incorporated or its affiliates. In countries where any of the Snap-on trademarks, service marks, domain names, logos and company names are not registered, Snap-on Incorporated claims other rights associated with unregistered trademarks, service marks, domain names, logos, and company names. Other product or company names referred to in this catalog may be trademarks of their respective owners.

Williams®
Wms.®
ATI® TOOLS
Bahco®
SIOUX™ TOOLS
CDI Torque Products®
SUPERECTOR®
SUPERADJUSTABLE®
SUPERBLACK®
SUPERCOMBO®
SUPERSOCKET®
SUPERRATCHET®
SUPERRENCH®
SUPERTORQUE®
SUPER-WMS®
PHILLIPS®
TORX®
POZIDRIV®
ROBERTSON®

Limited Warranty:
Snap-on Industrial Brands warrants that its' products shall be free from defects in workmanship and materials for the usable life of the product. This warranty is limited to products purchased from authorized Snap-on Industrial Brands distributors. Snap-on Industrial Brands, at its sole option, will repair, replace or grant a credit for product that does not comply with this warranty. The product must be returned to the Snap-on Industrial Brands distributor from whom the product was purchased for warranty service. If the distributor is unavailable, the product should be returned to Snap-on Industrial Brands, 6969 Jamesson Rd, Midland, GA 31820, freight prepaid. Include a contact name, phone number and a return address; please do not supply a post office box. Snap-on Industrial Brands, does not provide any warranty for: 1) consumable products, 2) products subjected to abnormal use, 3) normal wear and tear of products. Consumable products are goods reasonably expected to be used up or damaged during use. Abnormal use includes misuse, modification, neglect or lack of maintenance.

Torque Products Warranty:
Snap-on Industrial Brands warrants to the original purchaser of CDI Torque Products that the company's torque products are free from defects in workmanship and materials. Snap-on Industrial Brands will repair or replace CDI Torque Products which fail to give satisfactory service due to defective workmanship or materials (excluding calibration) for 12 months from the date of original purchase. Snap-on Industrial Brands warrants "initial, out of box calibration" of each new, unused CDI Torque Product. Repair, replacement or recalibration shall be at the election and expense of Snap-on Industrial Brands, and is your exclusive remedy in place of all other rights and remedies. Products must be returned with proof of purchase, freight prepaid, to a CDI Torque Products repair center for warranty service. Snap-on Industrial Brands will repair or replace Williams' Torque Multipliers which fail to give satisfactory service due to defective workmanship or material for 90 days from the date of original purchase. Snap-on Industrial Brands does not provide any warranty for products subjected to abnormal use. Abnormal use includes misuse, accident, modification, unreasonable use, neglect, lack of maintenance, or use after the tool is significantly worn.

Toolbox Warranties:
All toolboxes sold under the Williams brand will be warranted for a period of one (1) year from the date of purchase against defects in materials and workmanship. Any part(s) which are determined by Snap-on Industrial Brands to be defective in material or workmanship, will be, at Snap-on Industrial Brands discretion, repaired, replaced, or granted a credit. Any toolboxes that are to be returned, must be done through Snap-on Industrial Brands current Return Goods Policy, be sent back freight prepaid, and accompanied with a dated copy of the purchase order.

Ratchets:
Warrantable ratchets purchased new will be replaced with new ratchets. All broken ratchets must be returned to Snap-on Industrial Brands, 6969 Jamesson Rd, Midland, GA 31820 with a Returned Goods Authorization number (RGA #), freight pre-paid, in order to receive credit. Field destroyed ratchets will not be eligible for credit.

TO THE EXTENT ALLOWED BY APPLICABLE LAW, THIS WARRANTY IS IN LIEU OF ALL OTHER WARRANTIES, EXPRESSED OR IMPLIED, INCLUDING THE IMPLIED WARRANTIES OF MERCHANTABILITY AND FITNESS FOR A PARTICULAR PURPOSE, SNAP-ON INDUSTRIAL BRANDS AND ITS AFFILIATED COMPANIES SHALL NOT BE LIABLE FOR ANY INCIDENTAL, SPECIAL OR CONSEQUENTIAL COSTS OR DAMAGES INCURRED BY THE PURCHASER OR OTHERS.

This warranty gives you specific legal rights, and you may also have other rights which vary from state to state or country.

Snap-on Industrial Brands
Warranty Information Center
6969 Jamesson Road
Midland, GA 31820

Snap-on INDUSTRIAL BRANDS
WILLIAMS® | BAHCO® | CDI TORQUE PRODUCTS

Snap-on Industrial Brands is a division of IDSC Holdings, LLC

Snap-on® Industrial Brands

WILLIAMS® | BAHCO® | CDI TORQUE PRODUCTS

Sales Headquarters
Snap-on Industrial Brands
2801 80th Street
Kenosha, WI 53143

Distribution Center
Snap-on Industrial Brands
6969 Jamesson Road
Midland, GA 31820

Customer Service
Toll Free: USA 800-446-7404
Canada: 800-296-4787
Fax: 800-877-5687
Email: industrialbrands@snapon.com

Snap-on Incorporated

©2011 Snap-on Incorporated

snapon.com/industrialbrands

4/11 CAT1

Printed in USA